香港重機
HONGKONG MACHINES

TINY 微影

佳樂專 Kalos Blocks

叮叮重機

KB38002

02

MECHA TRAM

20
HONGKONG
MACHINES
18
TAXI
高度易燃物品
HIGHLY FLAMMABLE GOODS
宮塘牛頭角
LEYLAND
DENNIS
FELIX IP

葉偉青

作者葉偉青將自己童年滿滿懷舊回憶注入了「香港重機」一系列機械人中，既復刻又充滿創意。憑着異想天開的想像力和奔放豪邁的筆觸，使用公共交通工具作為主題。原創者設計了一系列具有獨特香港特色的機械人-「香港重機」！

葉偉青 - 自由創作人/香港漫畫家/插畫師，2014年前擔任動畫公司創作總監，參與作品包括《忍者龜》,《阿童木》,《時空冒險號》等。其中《香港重機1》更於2019年獲頒《香港出版雙年獎-圖文書出版獎》。

FELIX IP

Hong Kong Machines features a series of “rustic” robots with the infusion of Felix Ip‘s childhood nostalgic memories. With his whimsical imagination and unrestrained brush strokes; using public transportation as the main theme. Felix has created a series of fascinating robots with distinctive “Hong Kong” characteristics - Hong Kong Machines.

Felix Ip - comic and concept artist, illustrator, and animation director from Hong Kong. He is the former Creative and Movie Director for Animation Studios and Unicorn Animation Studios during 2014. Some of his major works included Zentrix, Teenage Mutant Ninja Turtle, and Astroboy. One of the books Hong Kong Machines 1 has won the Best Artbook.Award in the Asia Pacific Animation & Comics category in 2019.

香港重機
HONGKONG MACHINES

《香港重機》- 最初只屬自娛項目，經社交媒體分享後備受關注，繼而衍生不同類型的產品。 運用異想天開的想像力和獨特筆觸， 最初以公共交通為主題；創建了具有獨特“香港”特徵的天馬行空機器人- 《香港重機》！靈感取材自生活常見的本土貼地元素，加以灌注童年回憶情懷；《120叮叮電車重機》、《火水爐重機》、《糖蔥餅重機》等…！一系列冠名《香港》二字的自家機械人在身邊悄悄地蔓延伸展，喚醒你我的流金歲月。

HongKong Machines - originally only a self-entertainment project, the artwork have gained instant popularity after being shared on various social media platform. Different type of products were derived since the official launch of HongKong Machines. Using whimsical imagination and unique brushstrokes, at first using public transportation as the main theme; created unique "Hong Kong" characteristics robots - "Hong Kong Machines"! Inspired by common local essence from daily life, infused with the nostalgic memories from childhood ; "120 Dingding Trambot“, "Kerosene Stovebot”, "Spring Field Pizzabot”, etc...! A series of “HongKong Machines” robots manifested themselves discreetly among us; awaken our long lost golden years.

HONGKONG MACHINES

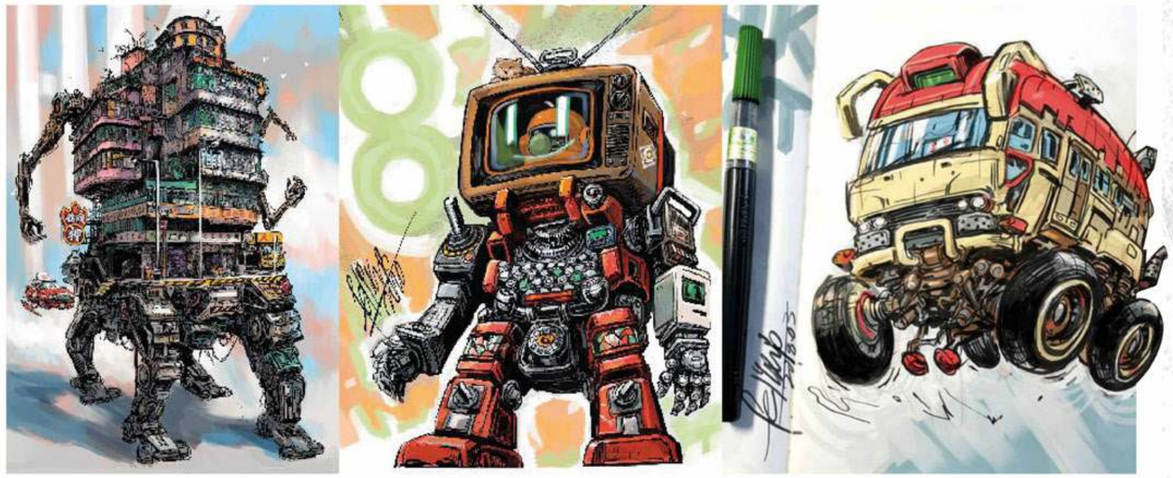

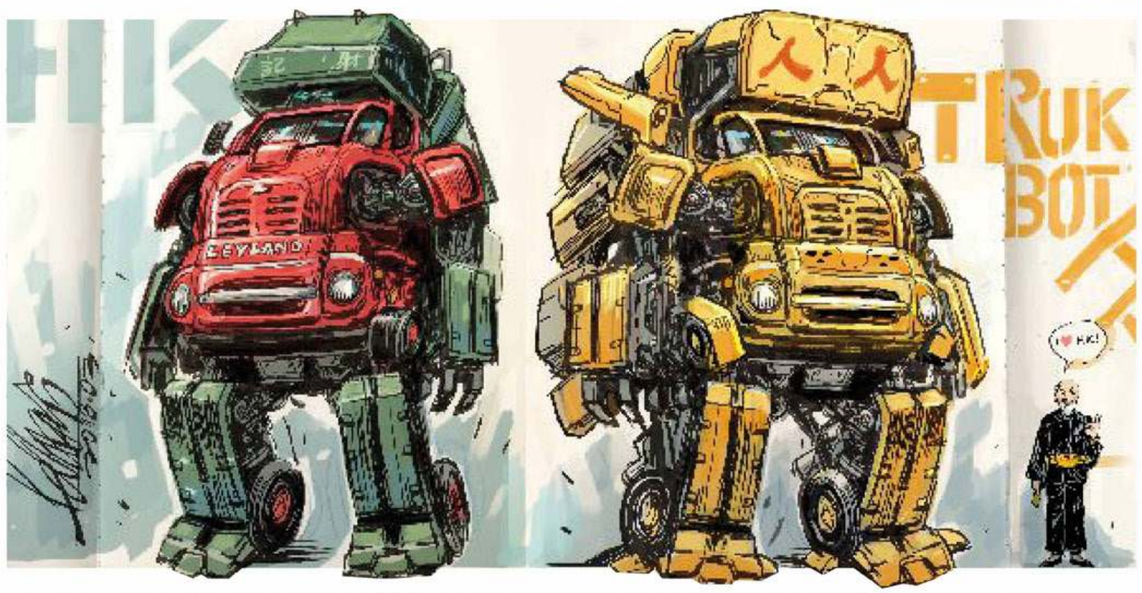

HONG KONG MACHINES

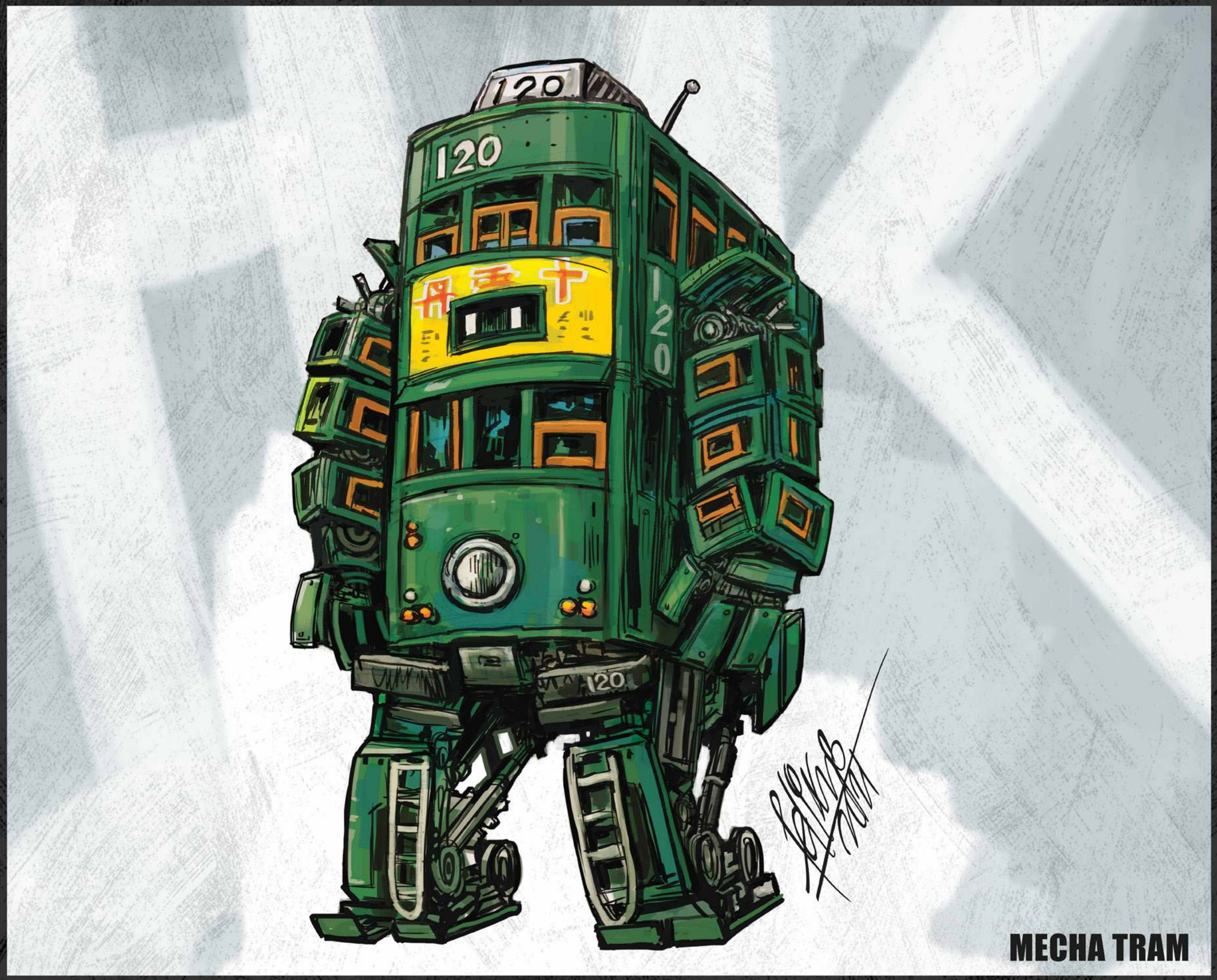

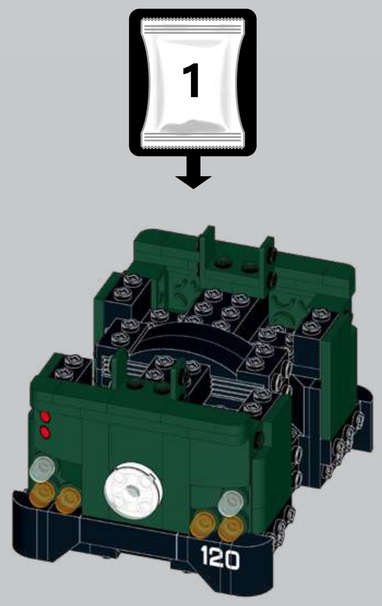
1
120

2-3
120

4-5
120
120
120

6
120
120
120

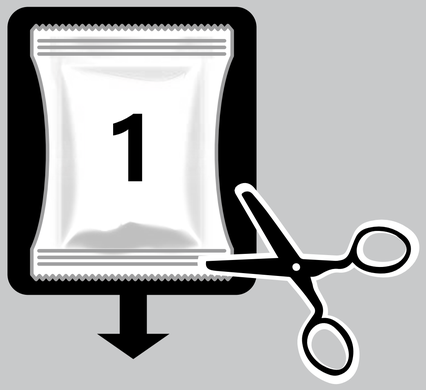
1

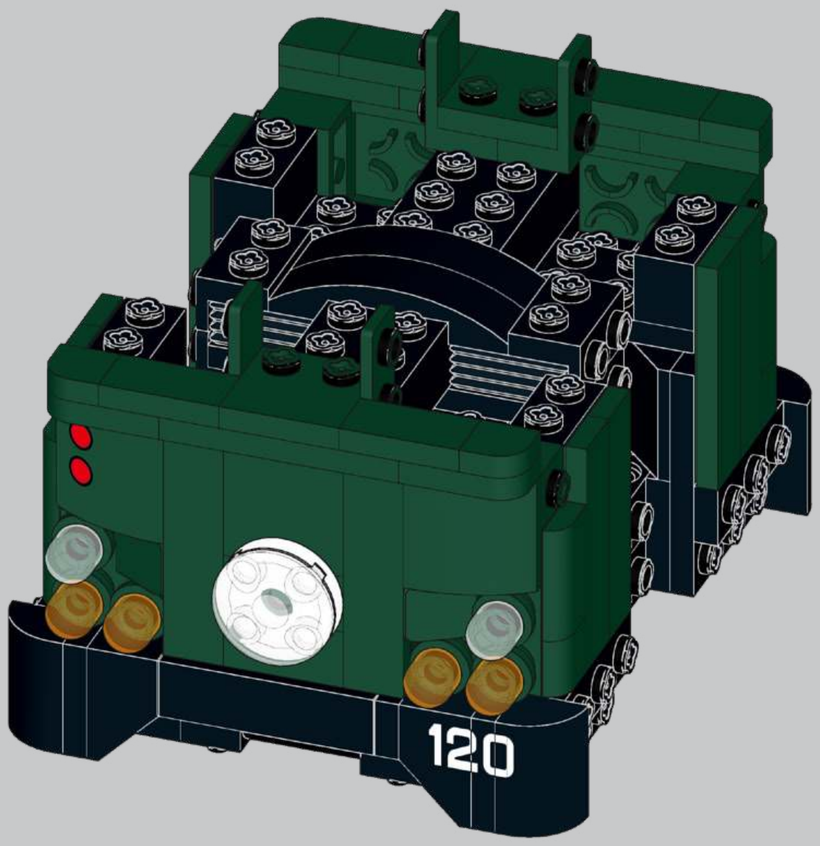
120

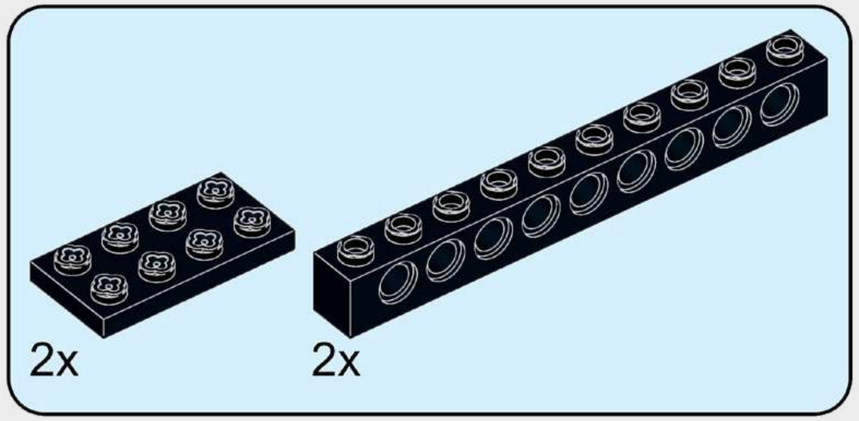

1

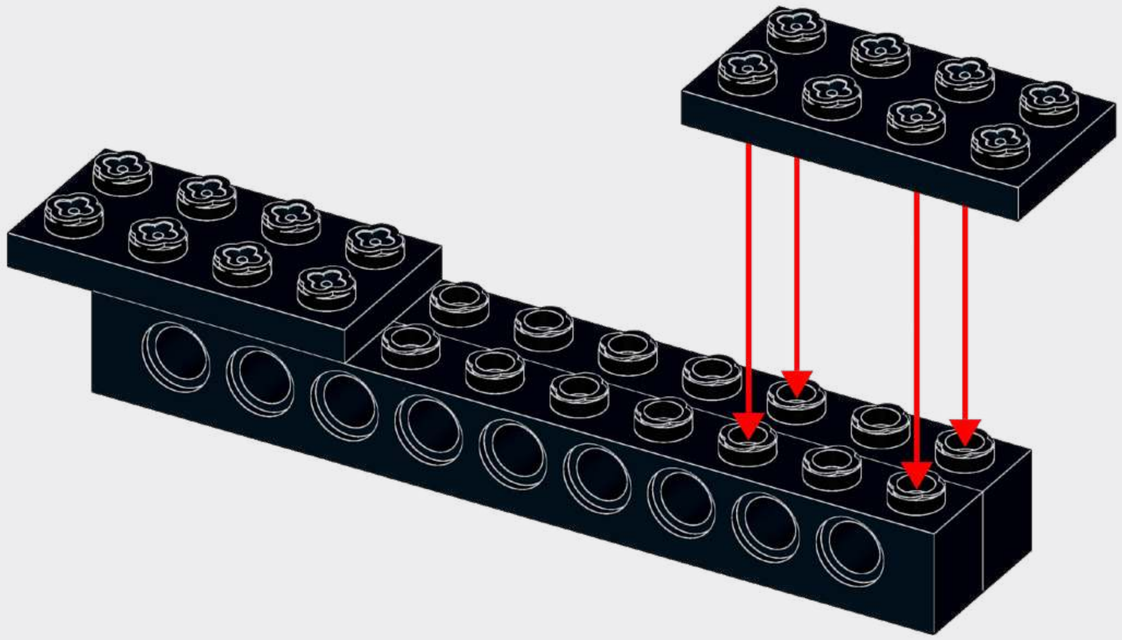

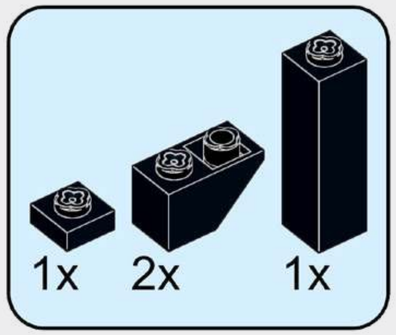

2

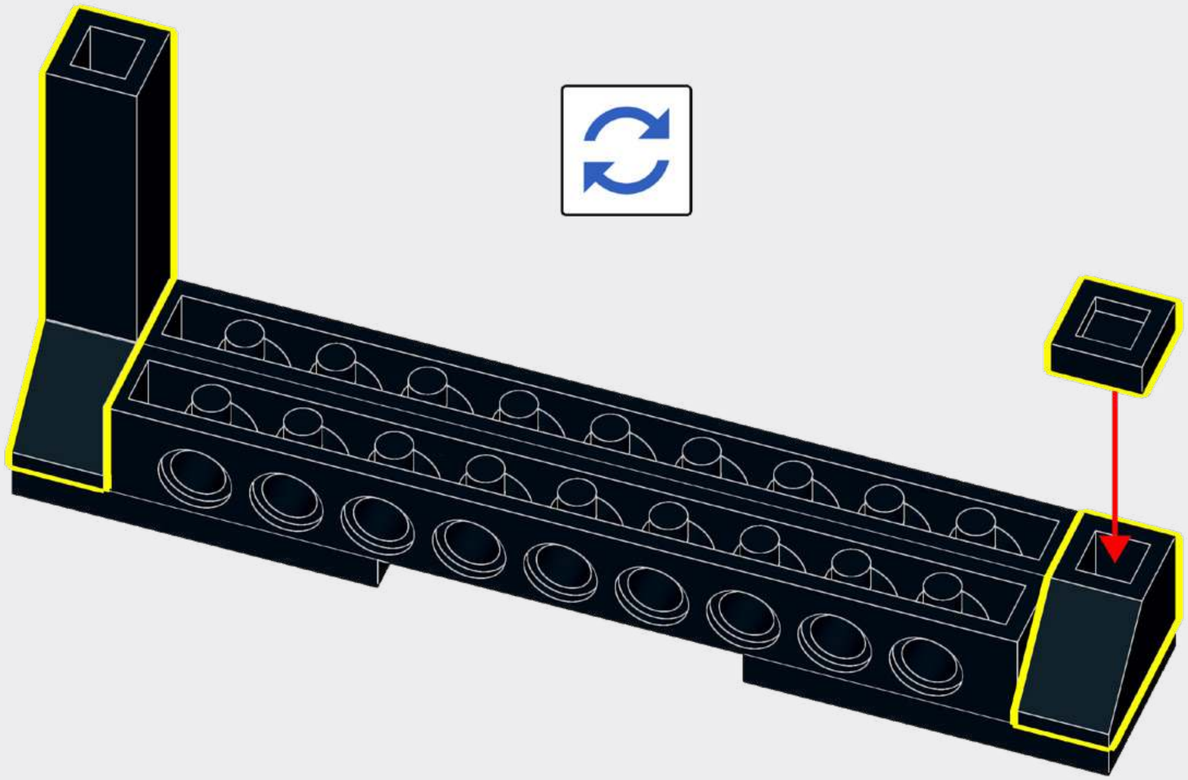

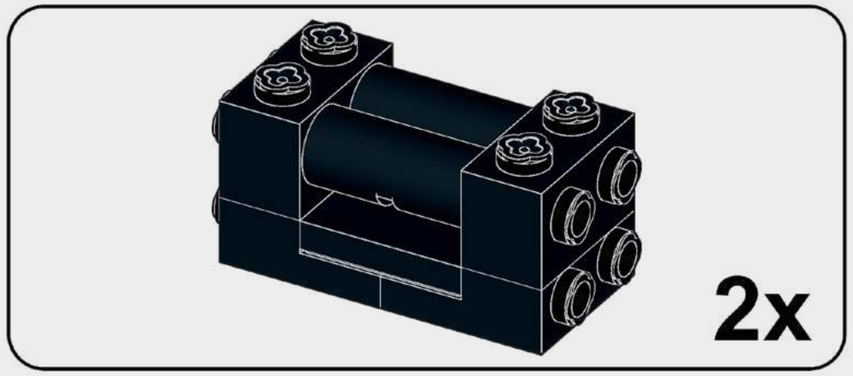

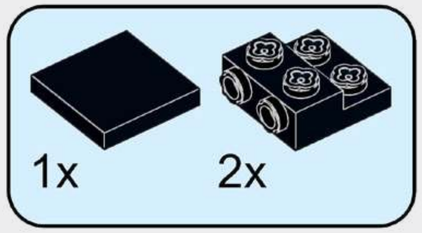

3

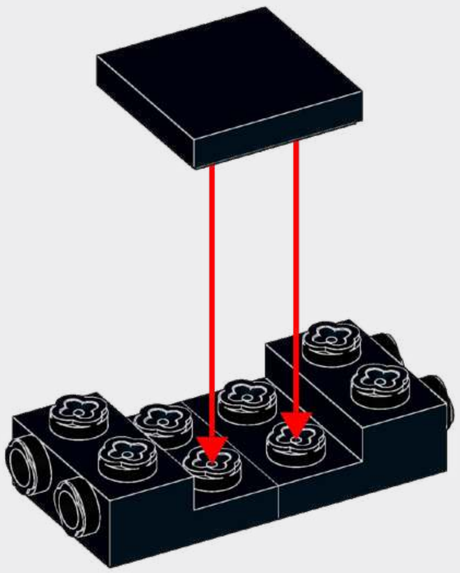

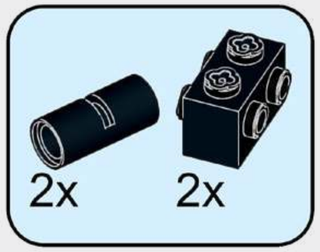

4

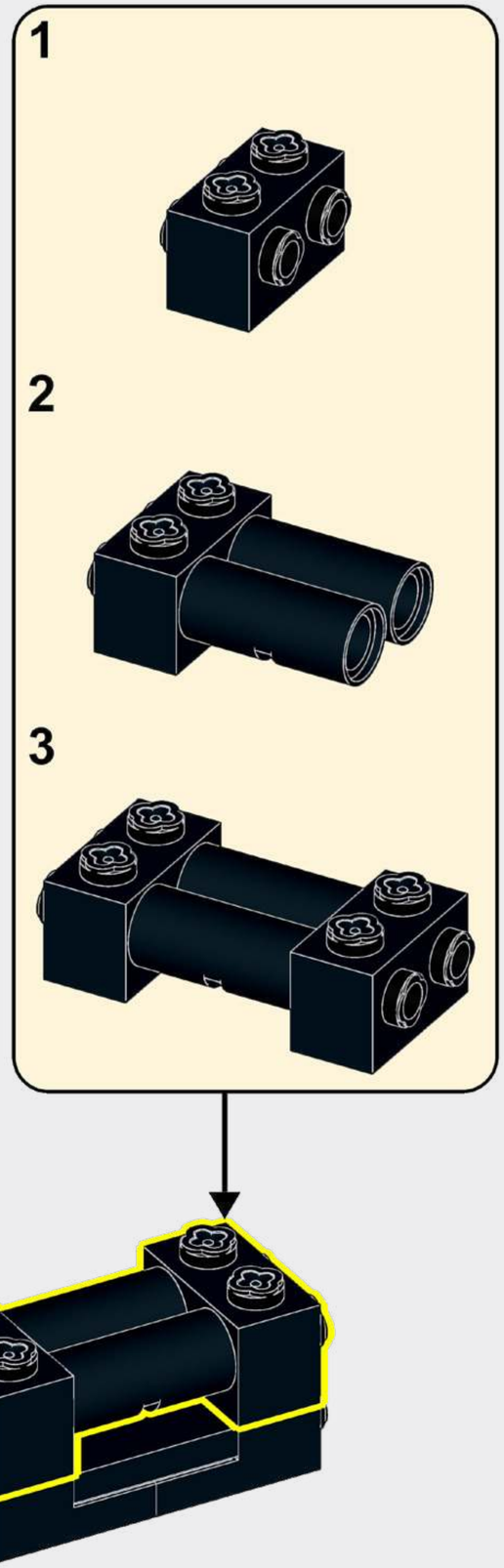

5

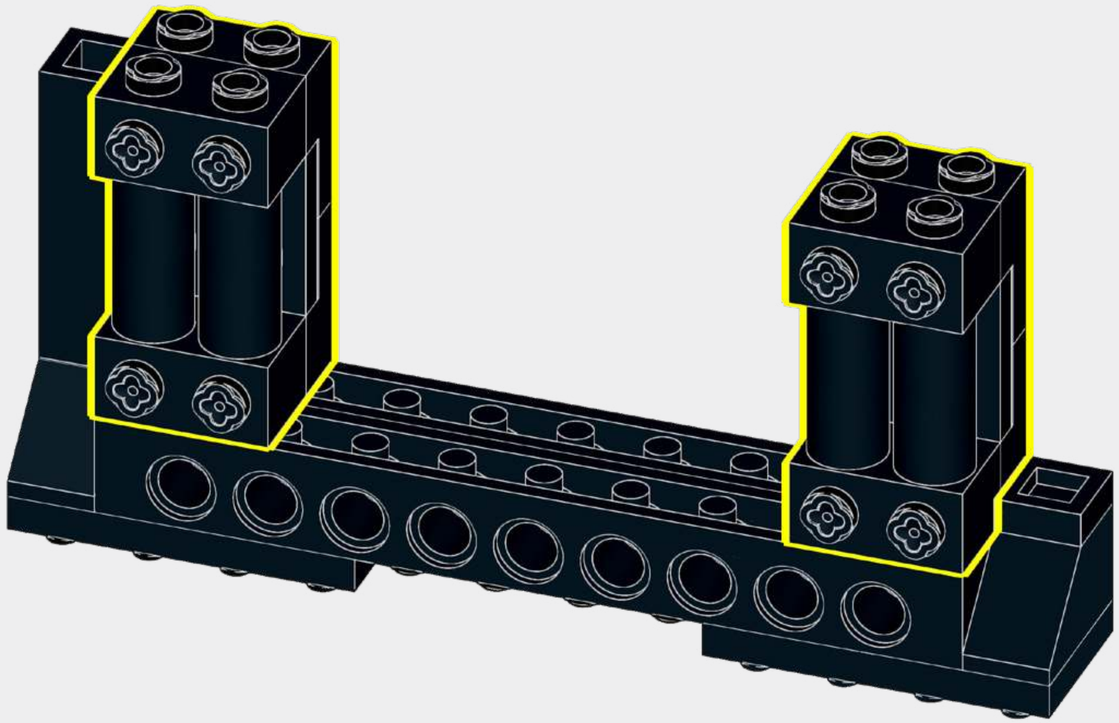

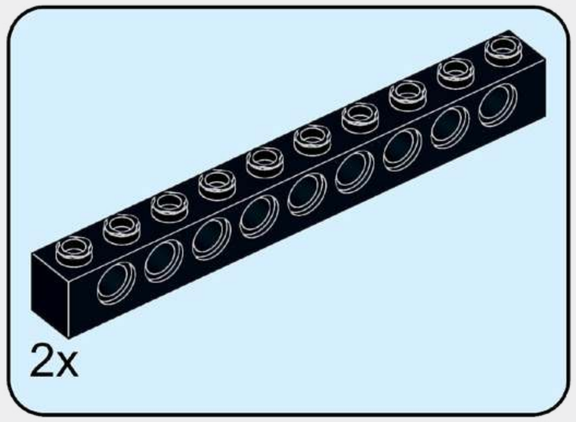

6

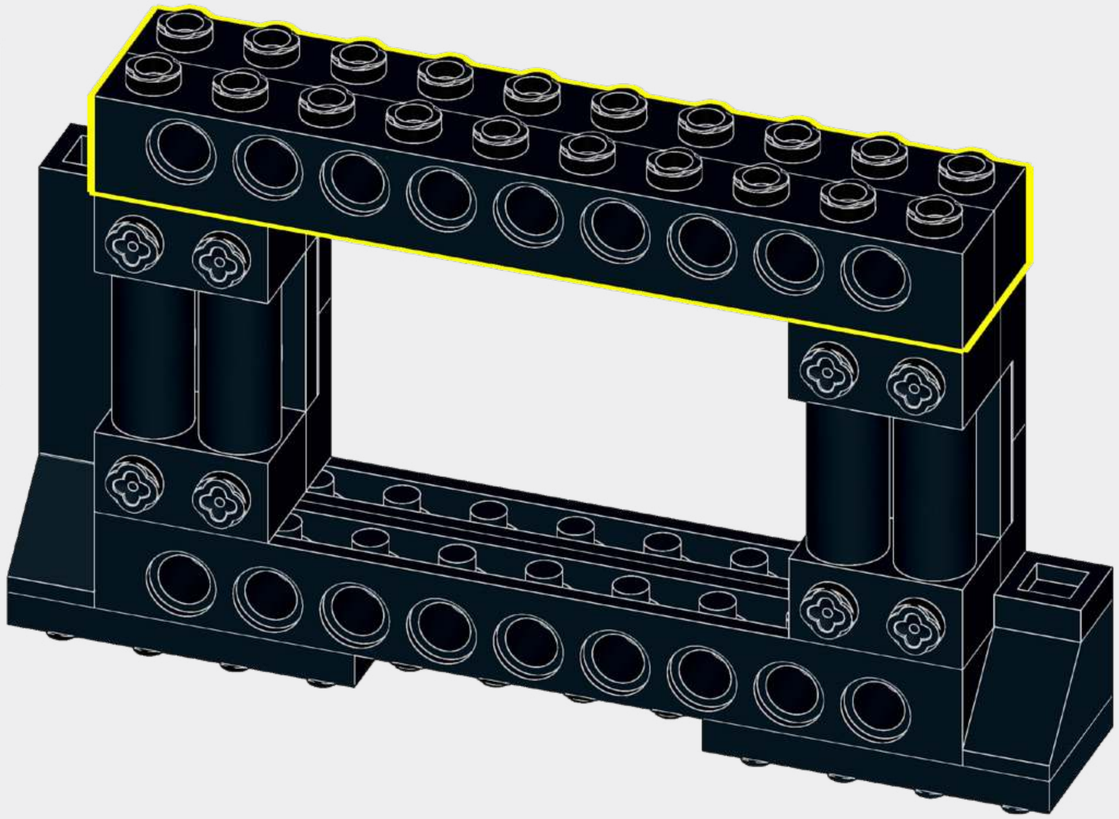

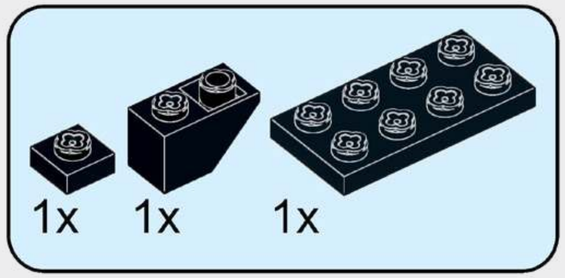

7

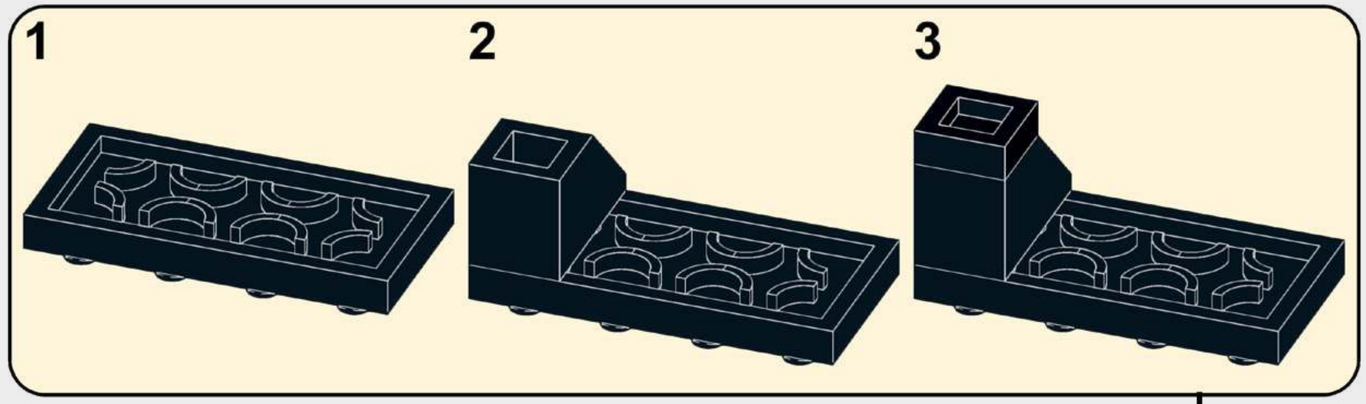

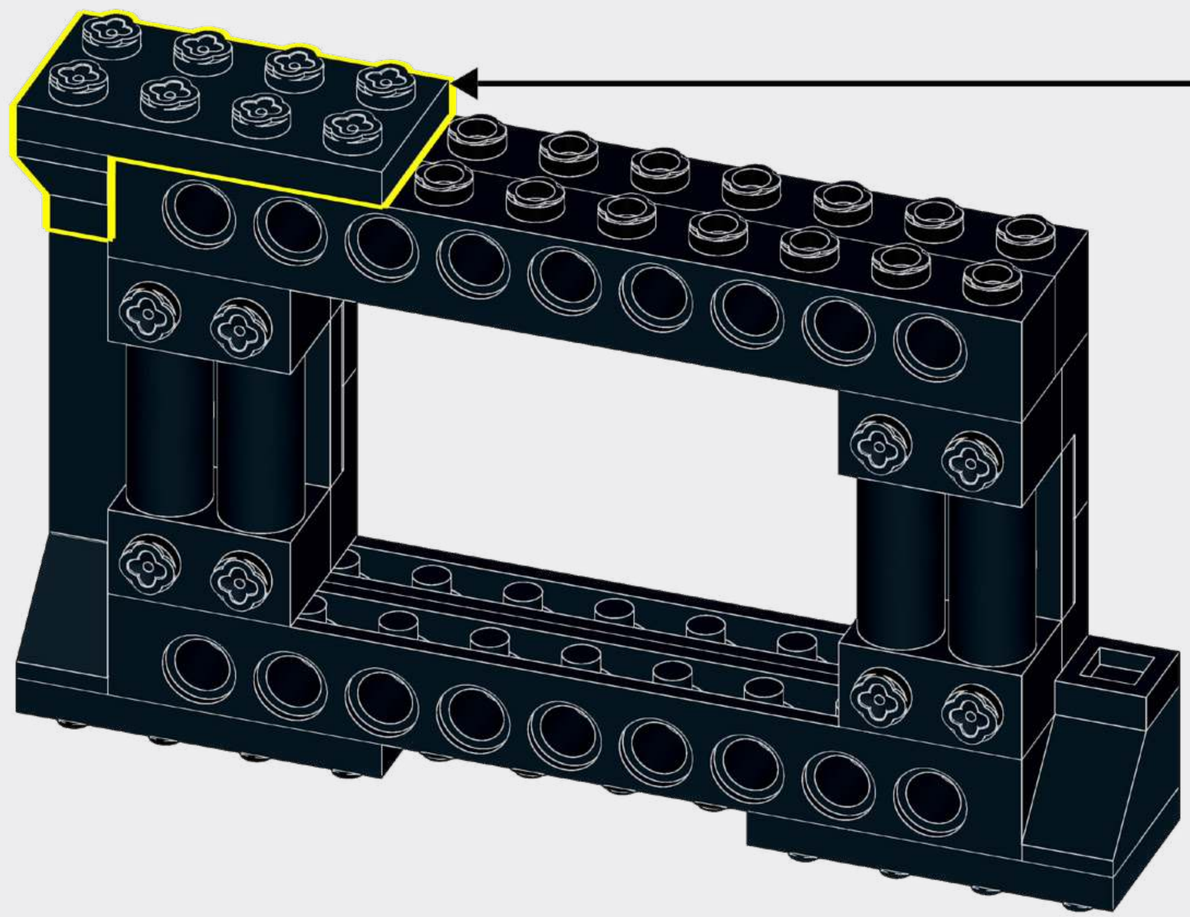

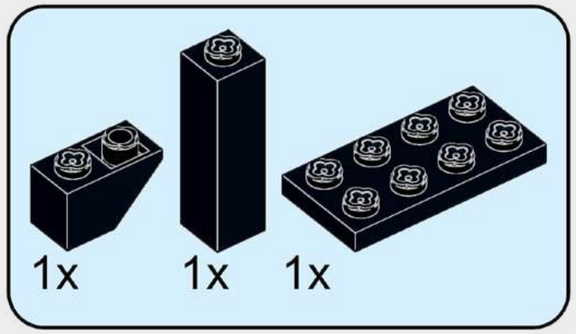

8

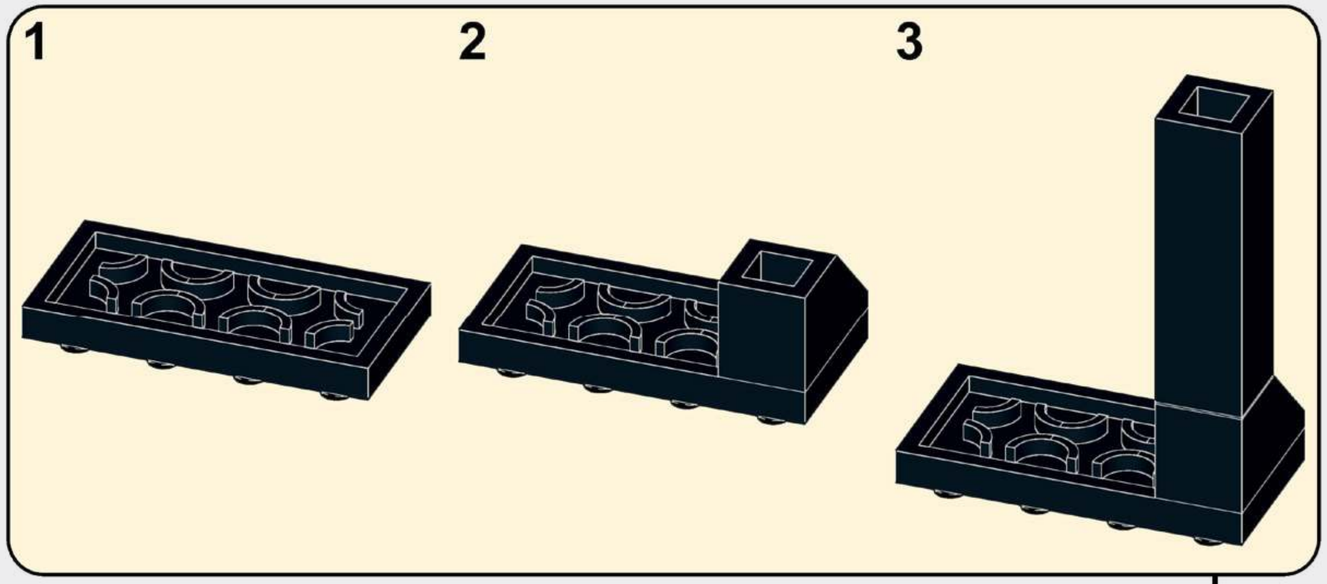

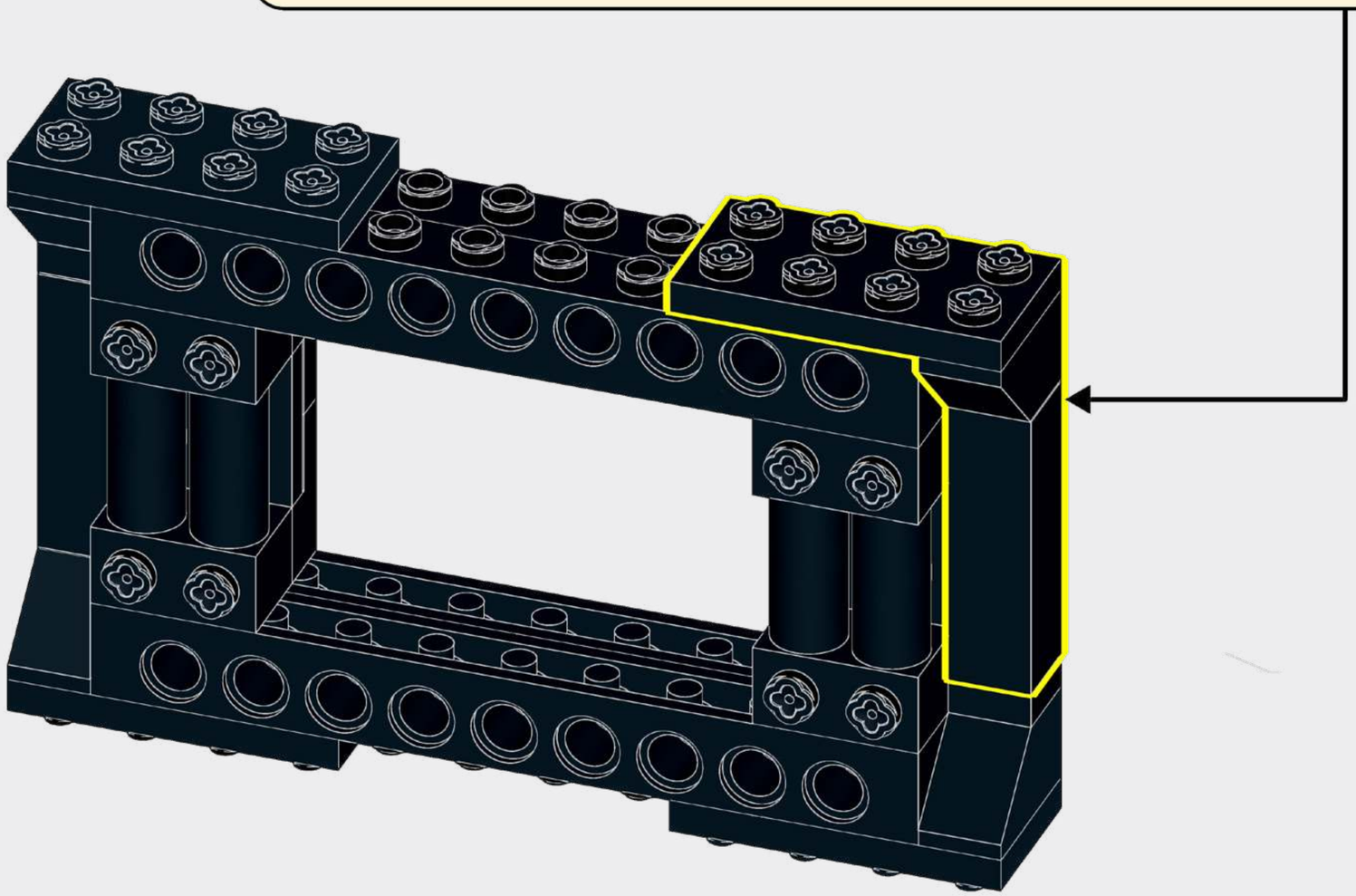

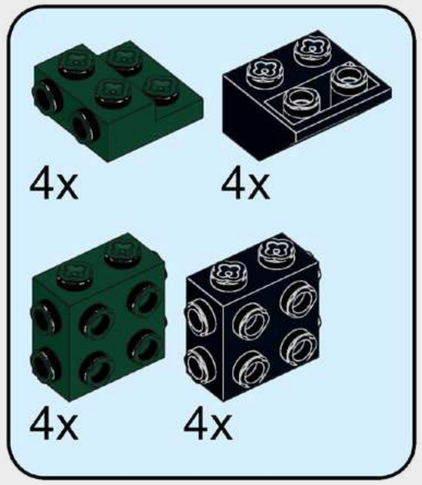

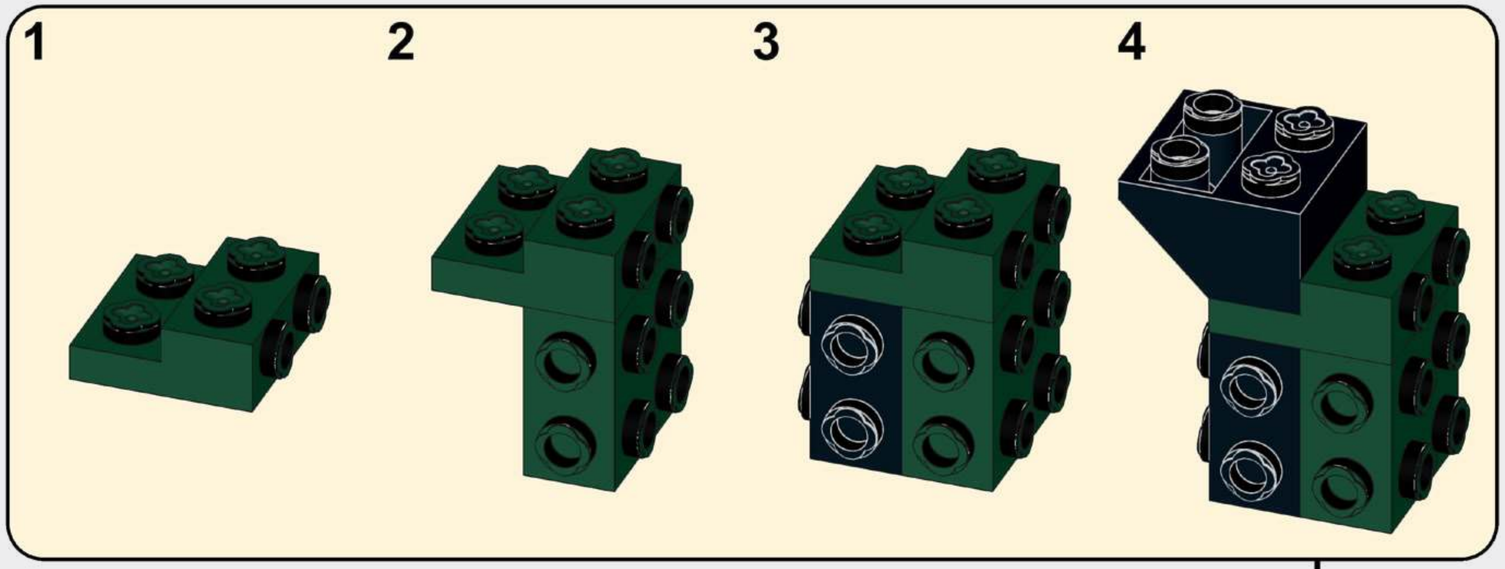

9

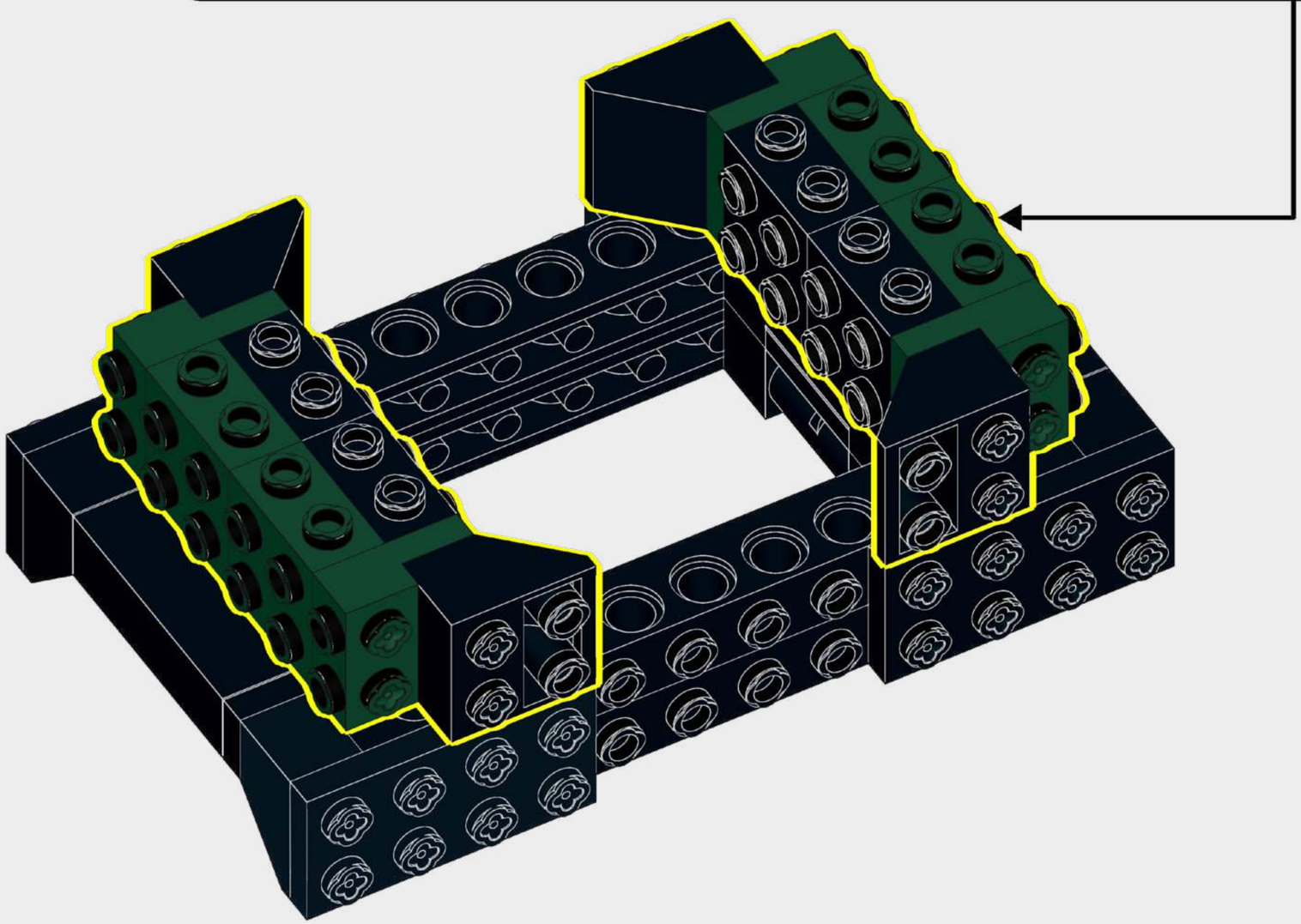

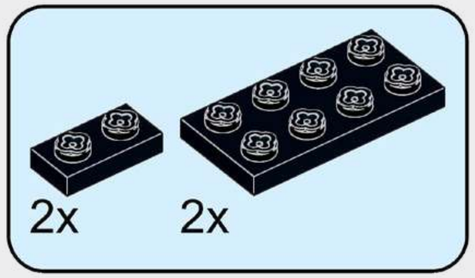

10

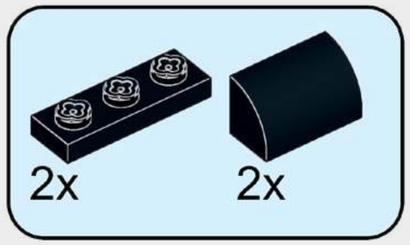

11

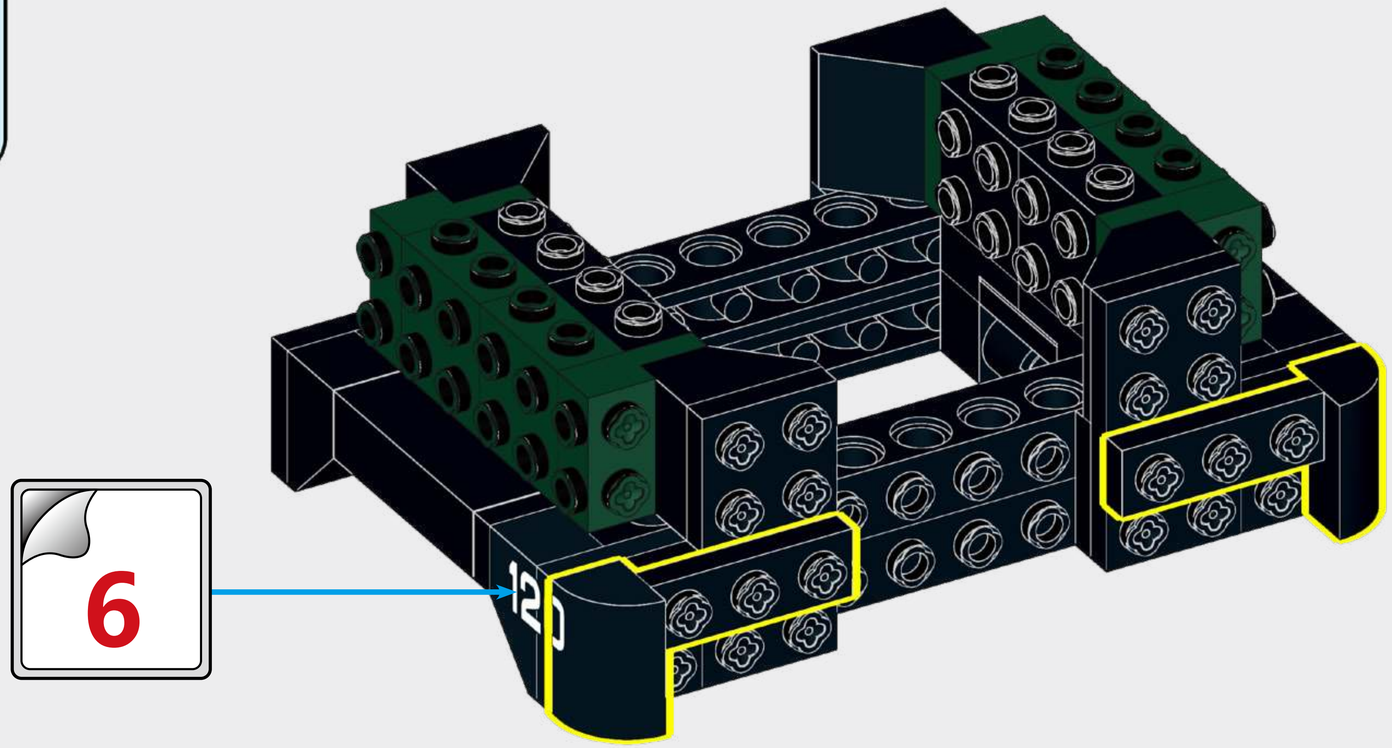

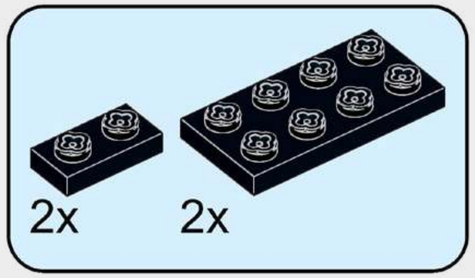

12

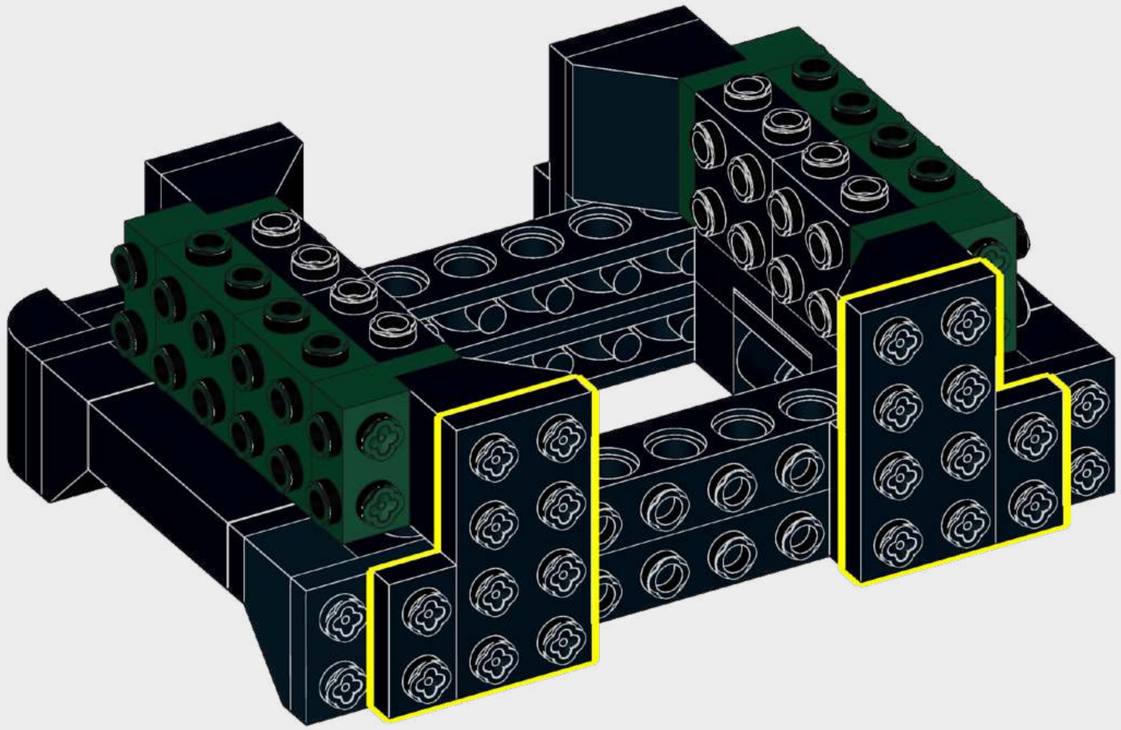

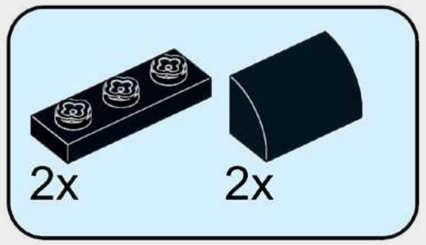

13

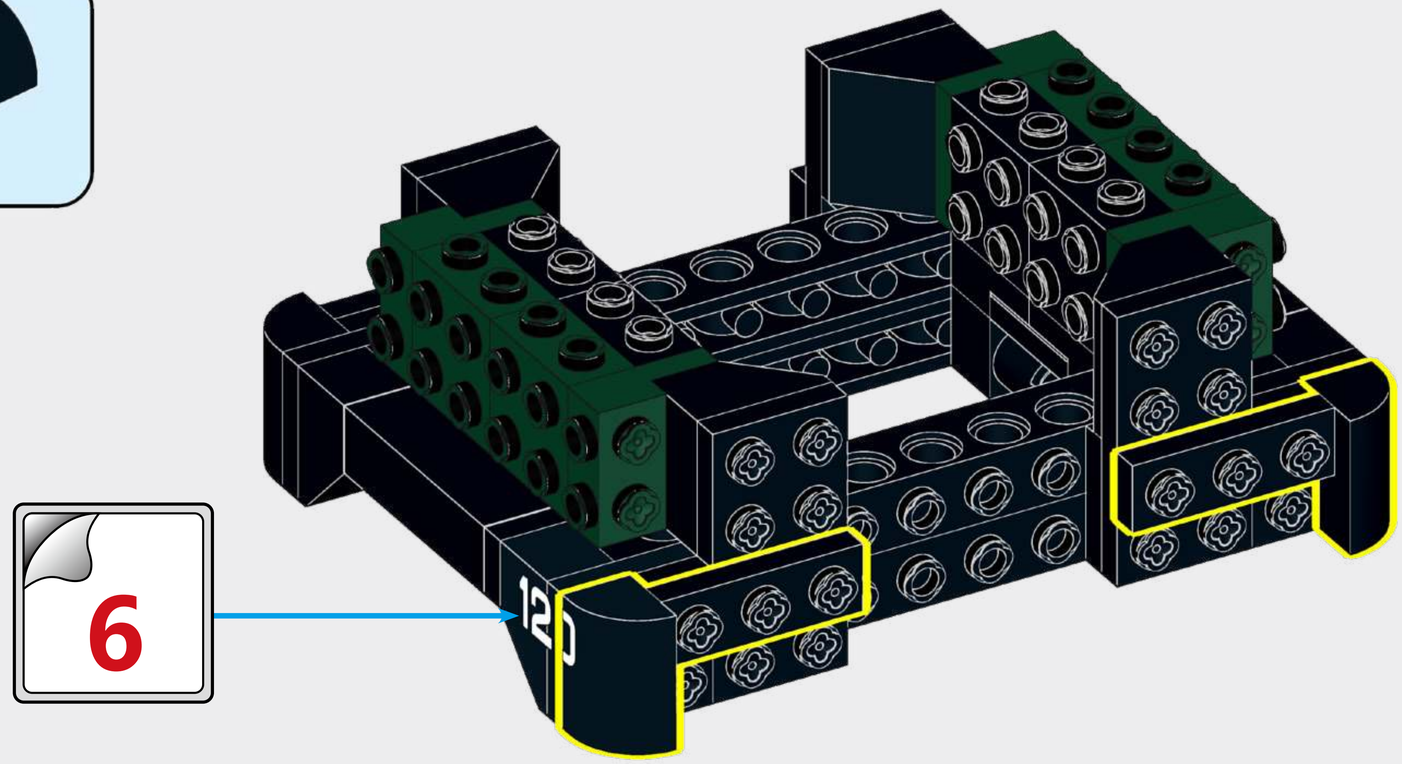

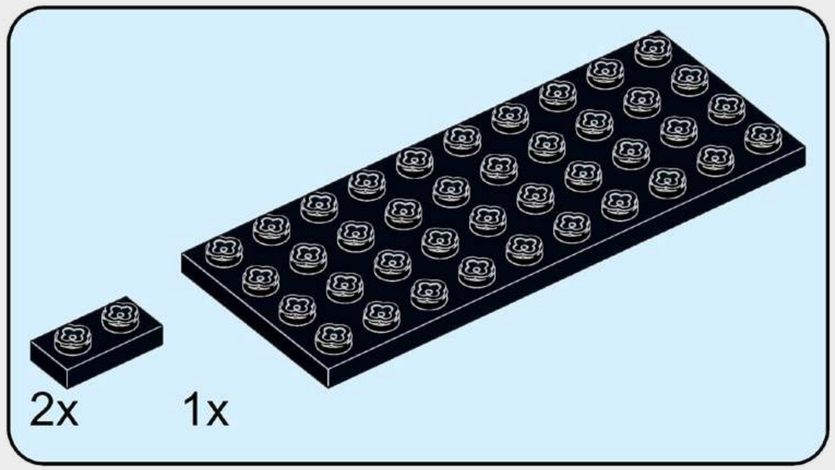

14

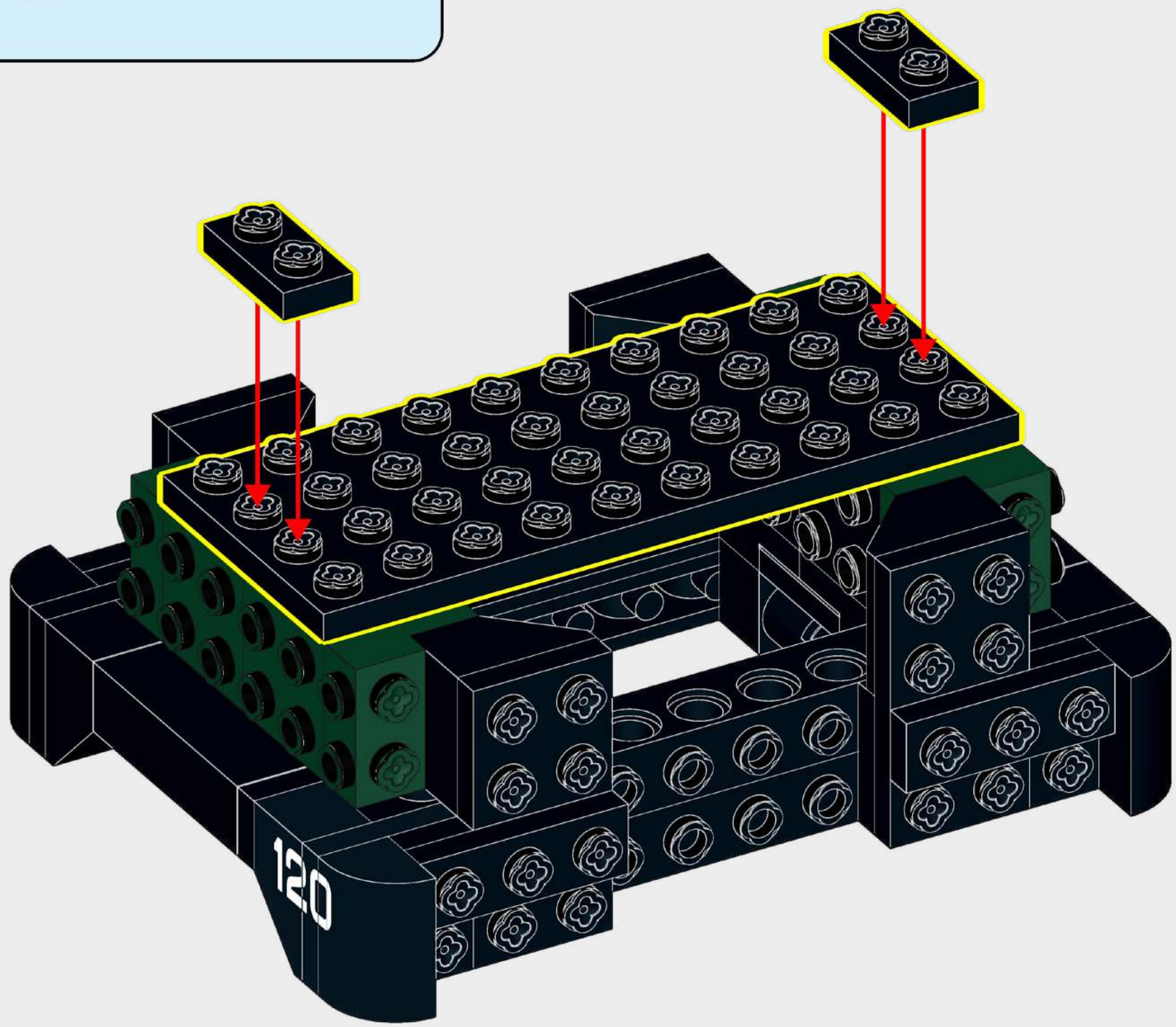

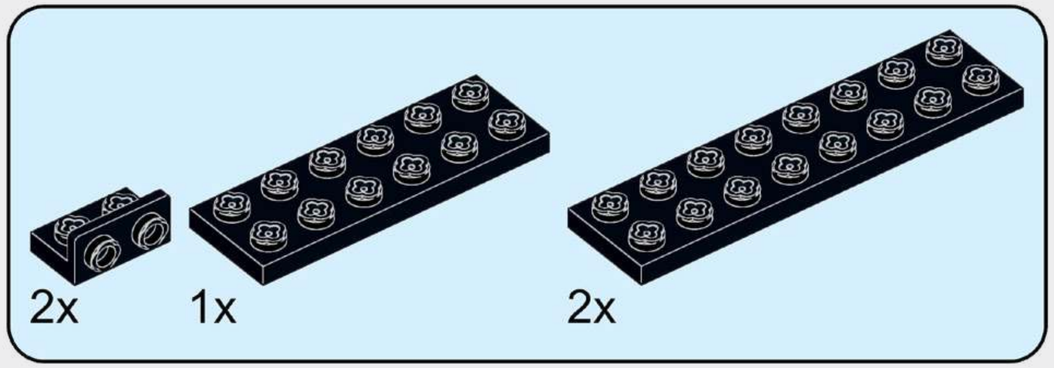

15

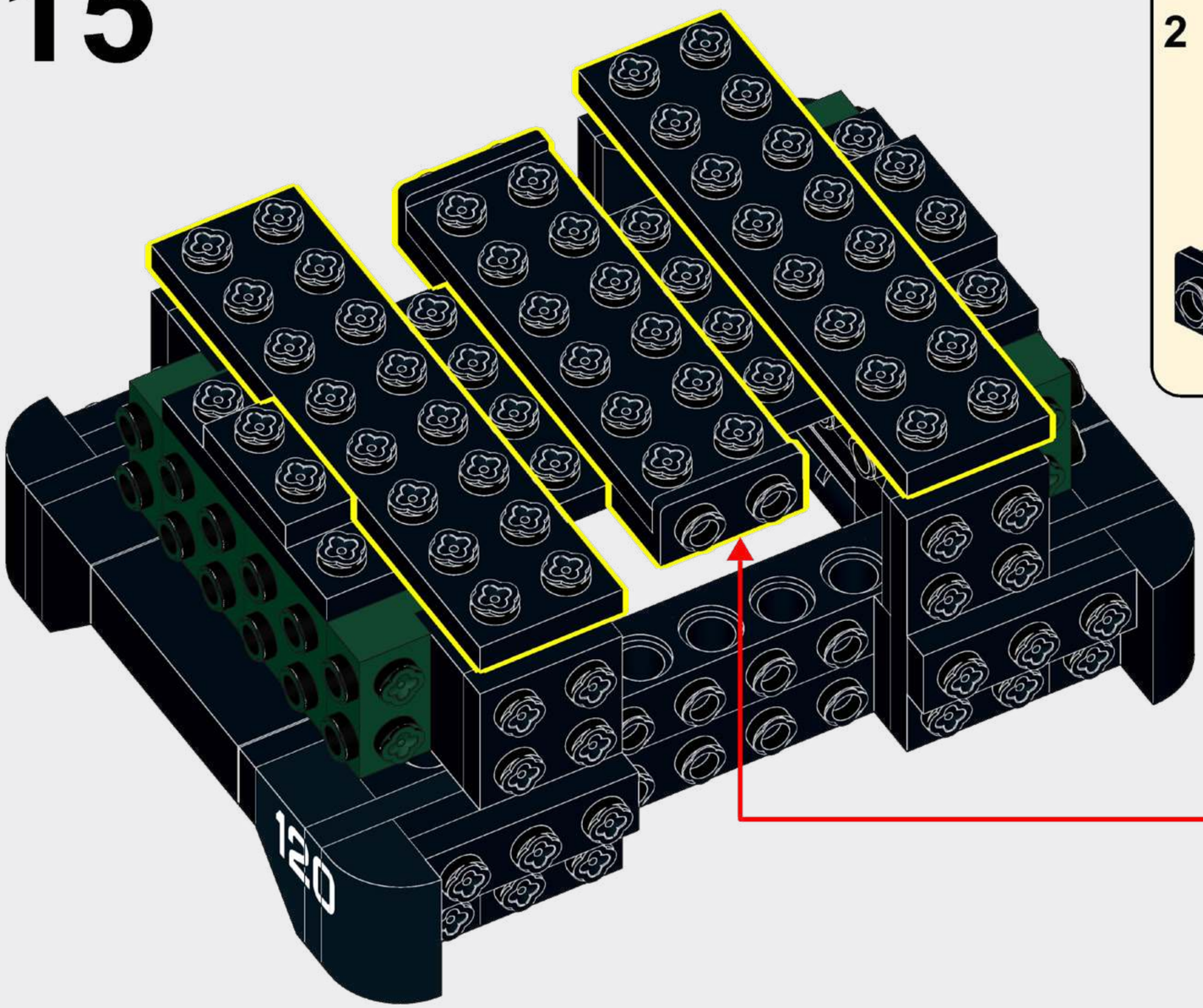

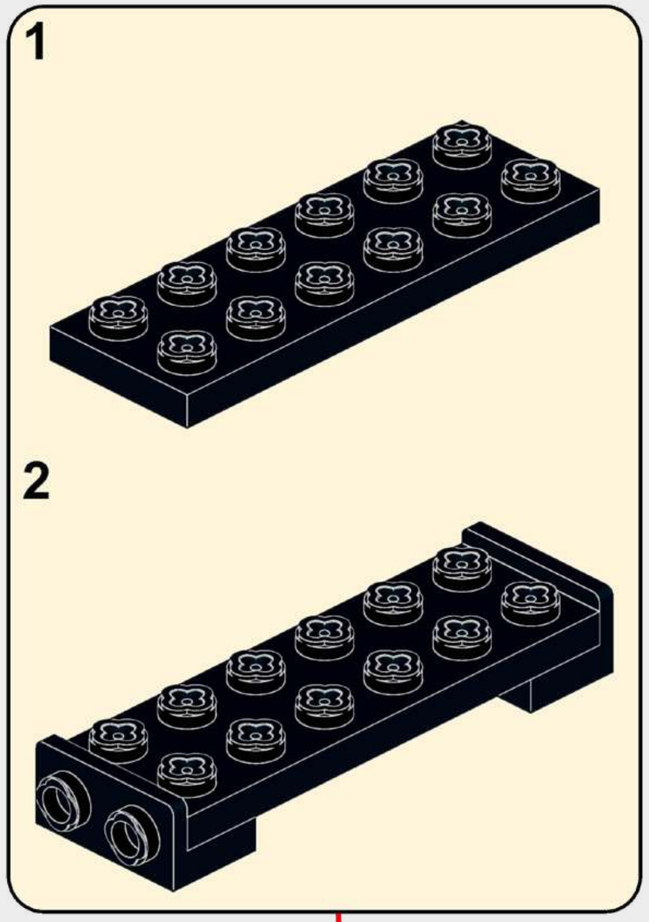

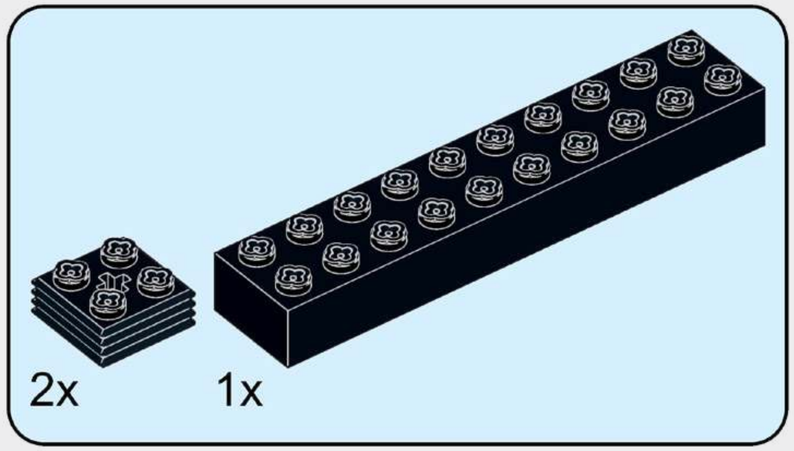

16

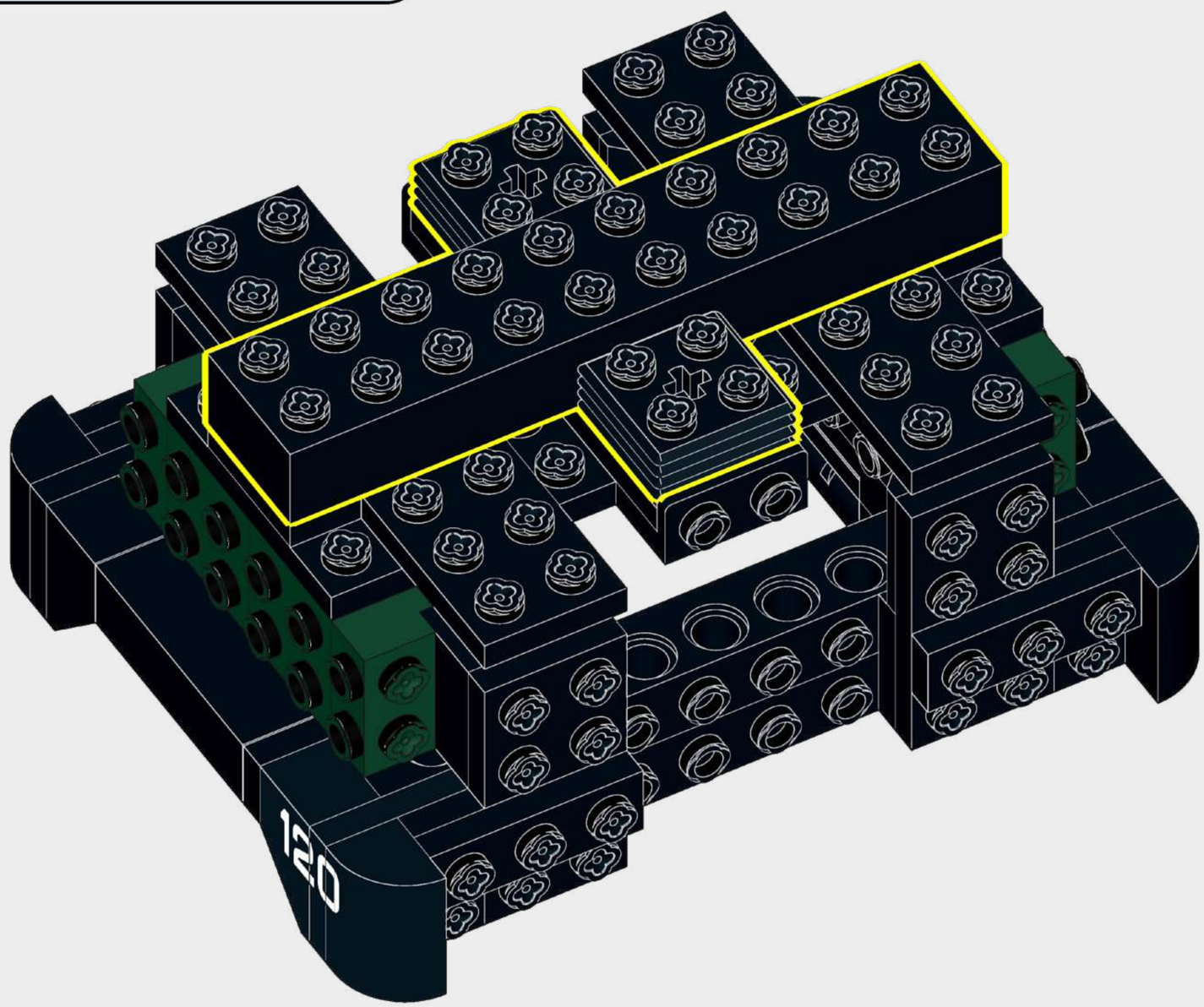

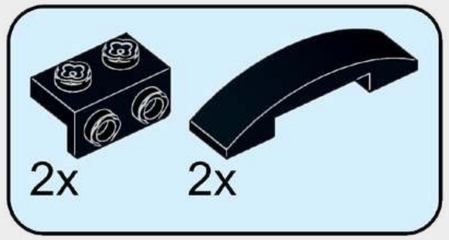

17

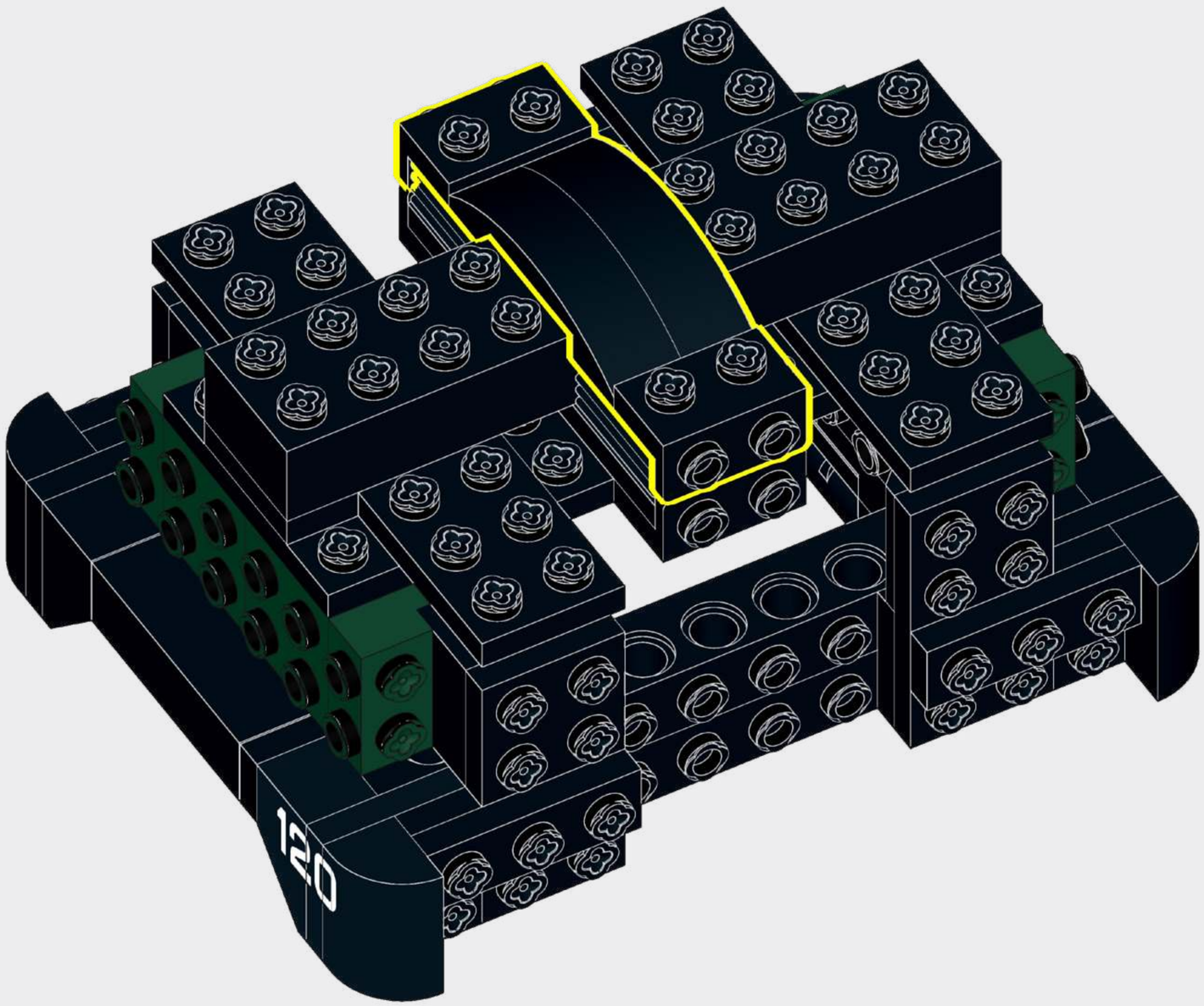

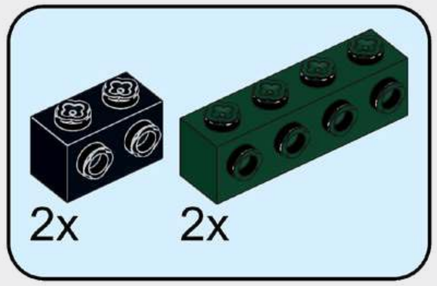

18

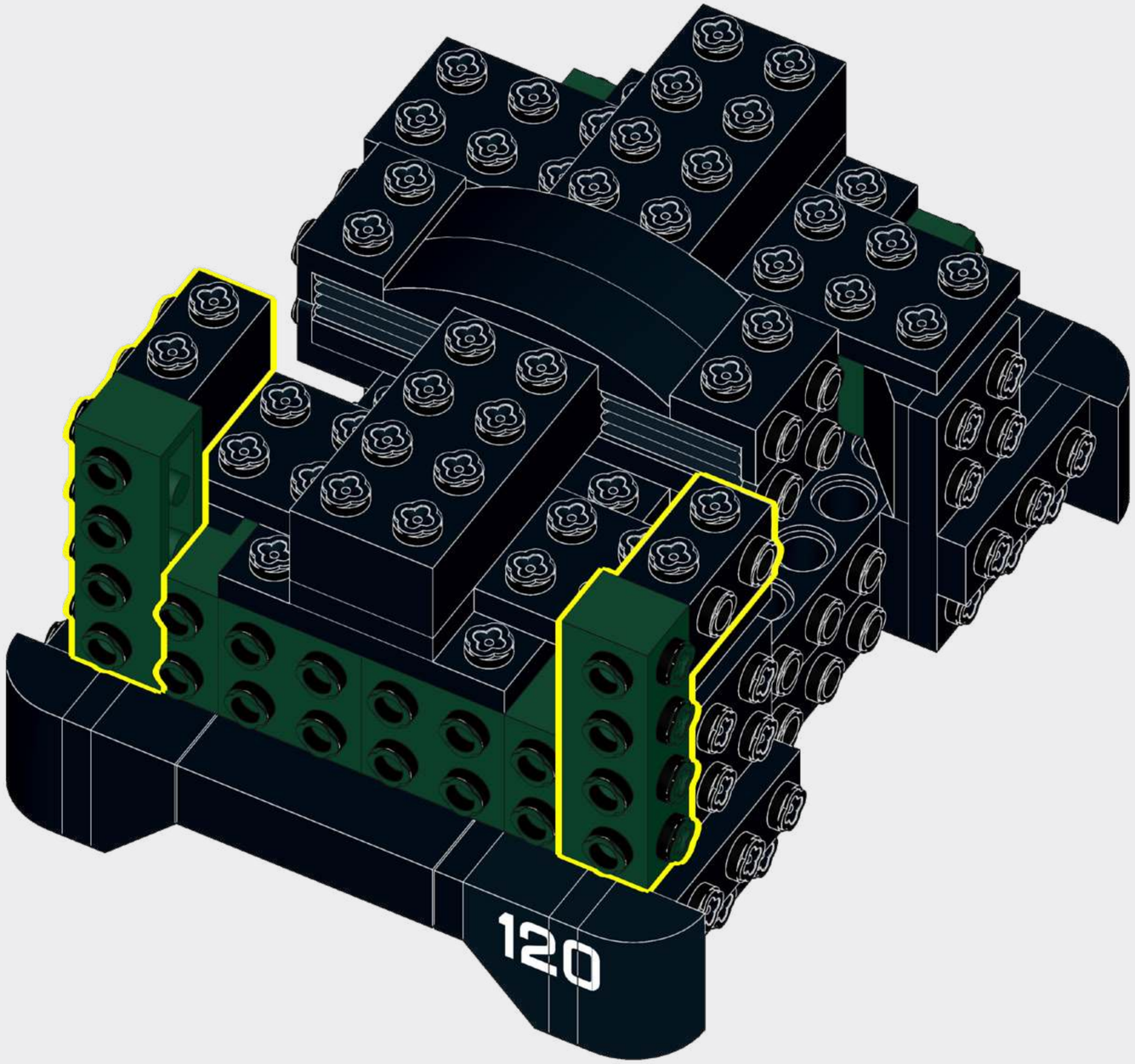

19

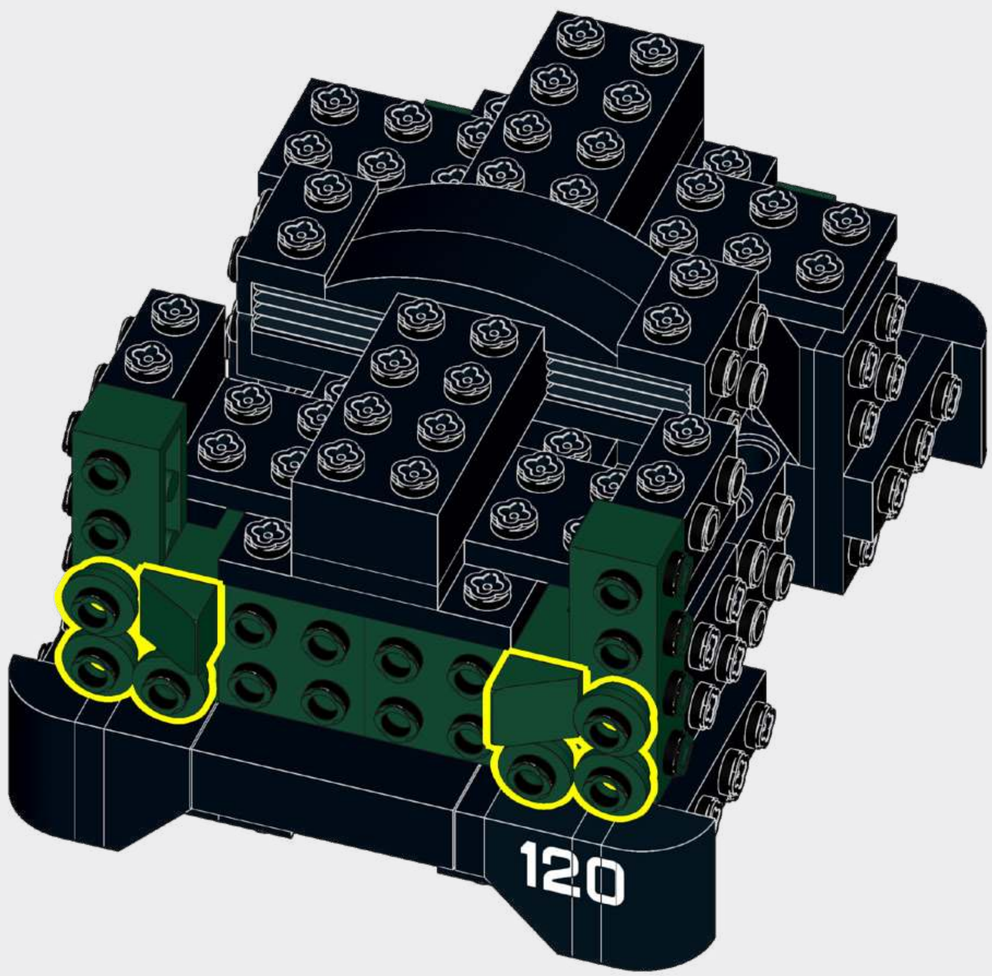

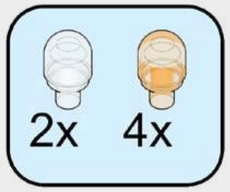

20

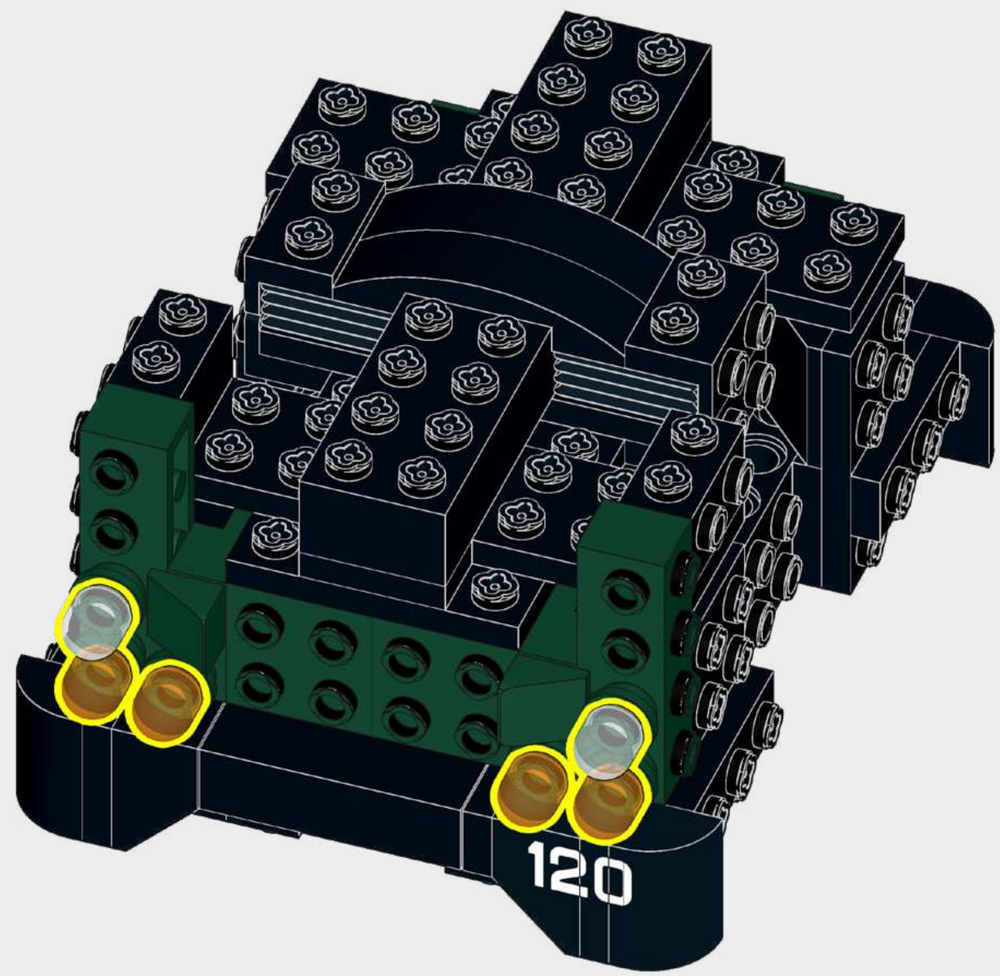

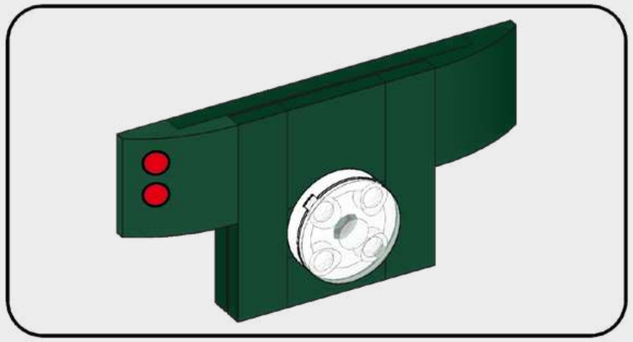

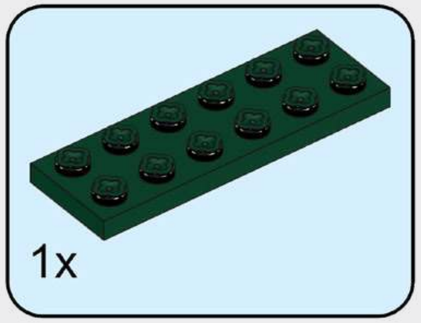

21

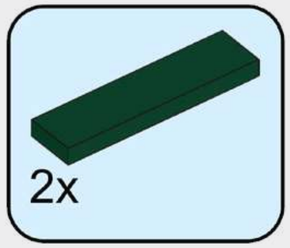

22

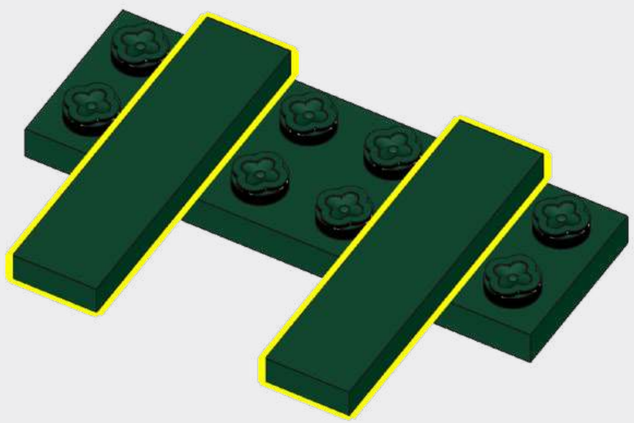

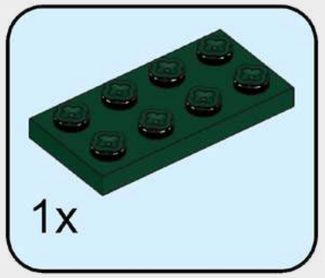

23

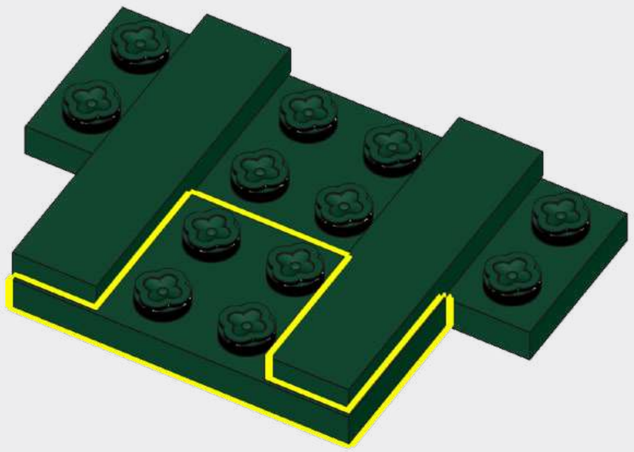

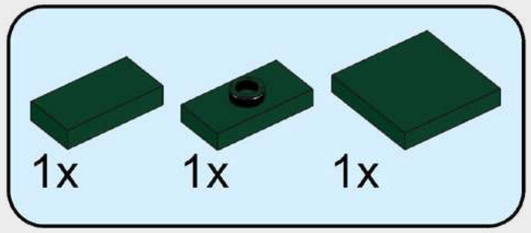

24

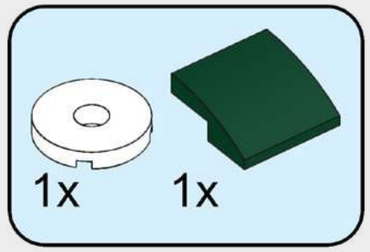

25

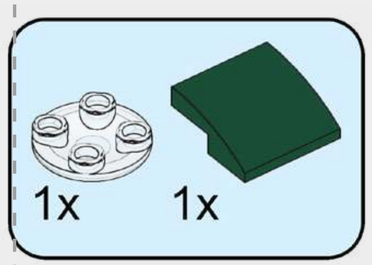

26

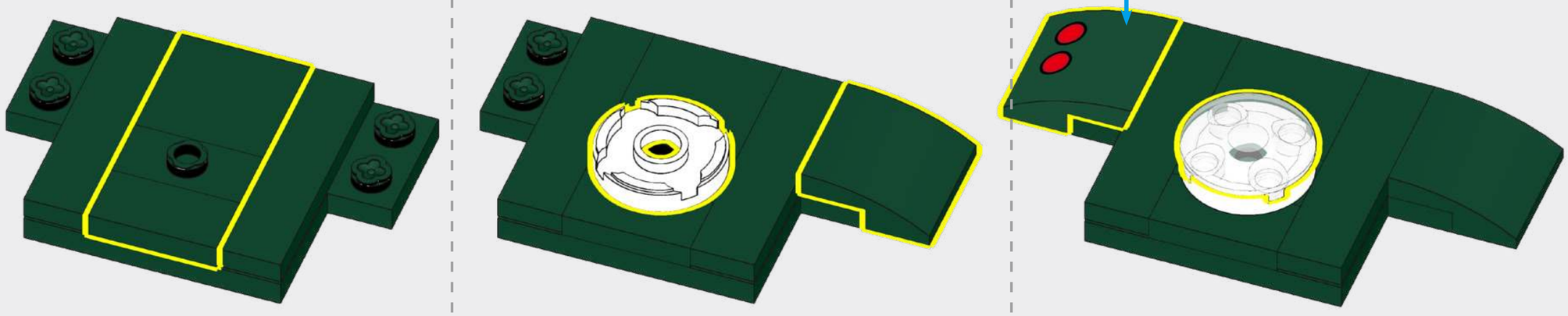

27

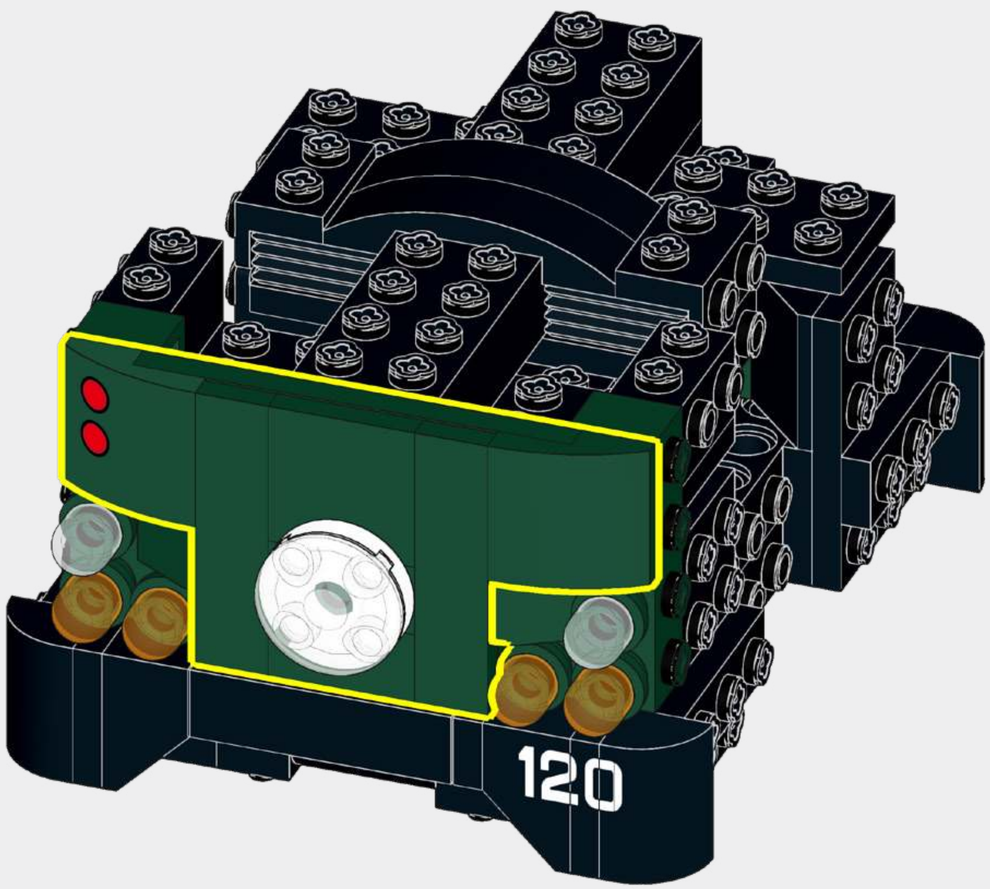

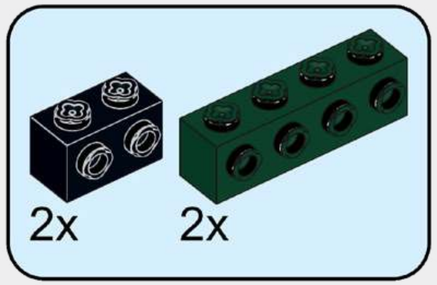

28

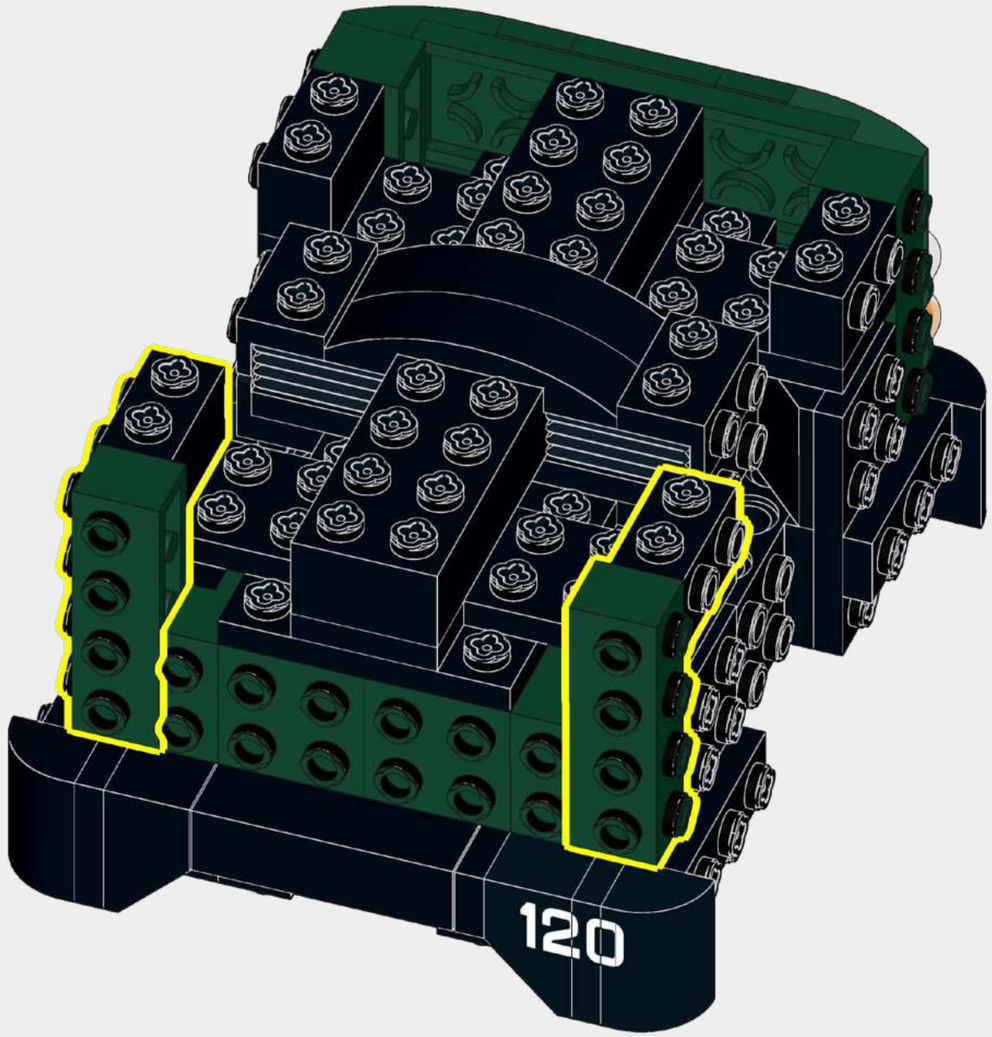

29

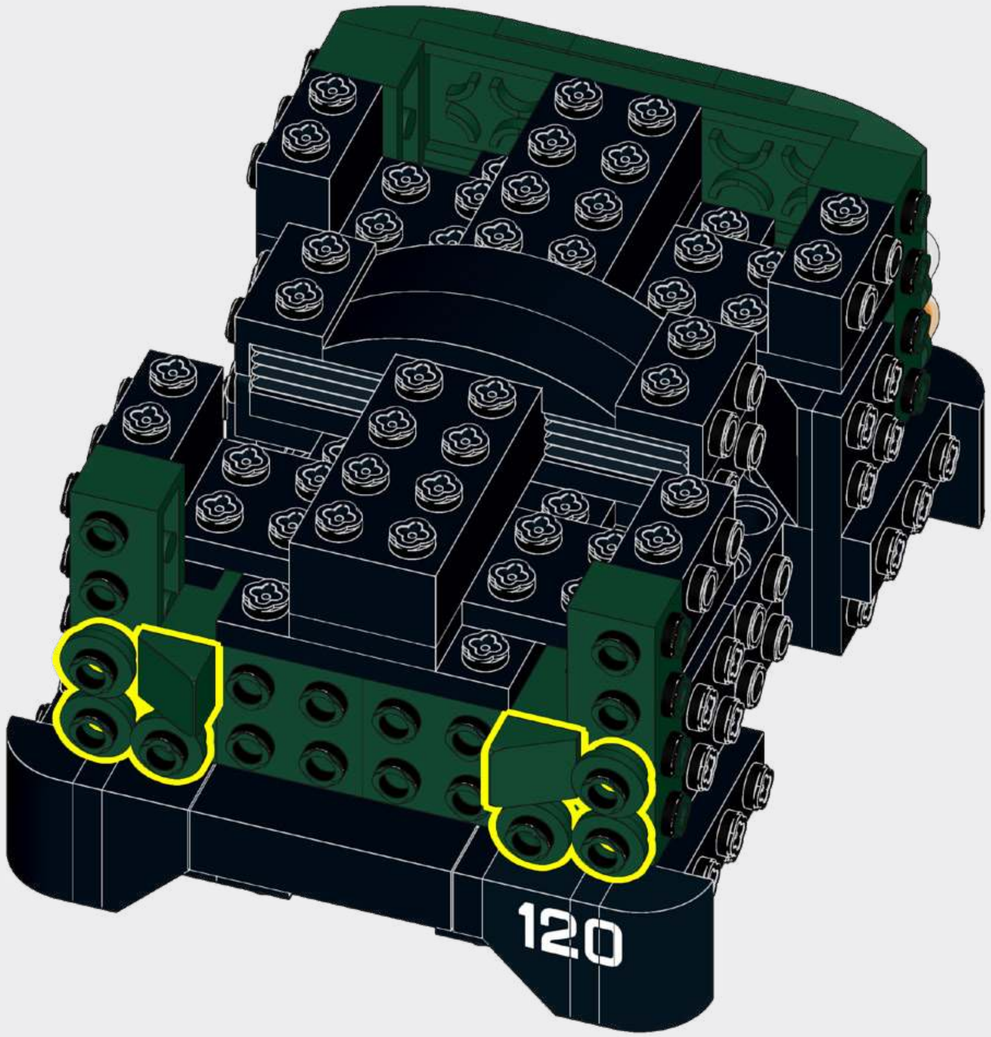

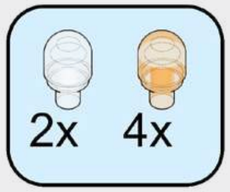

30

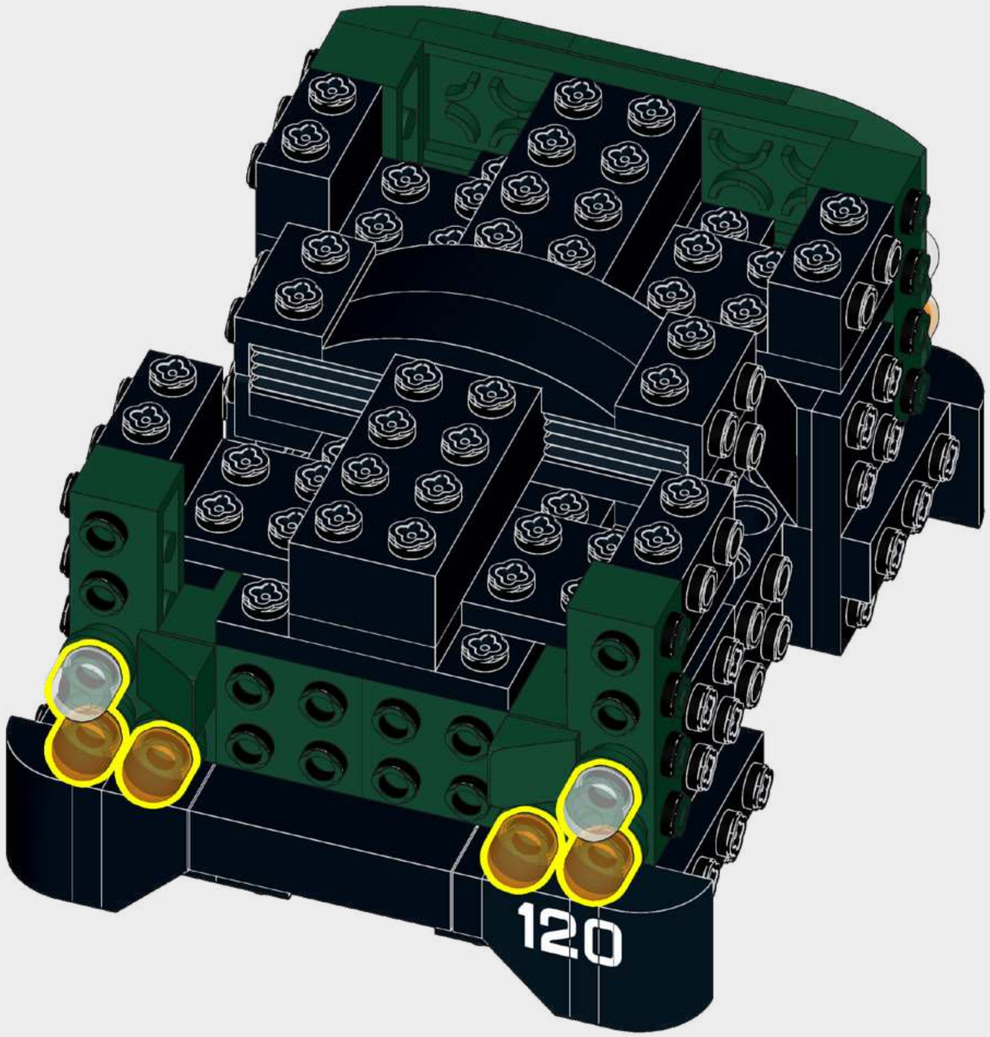

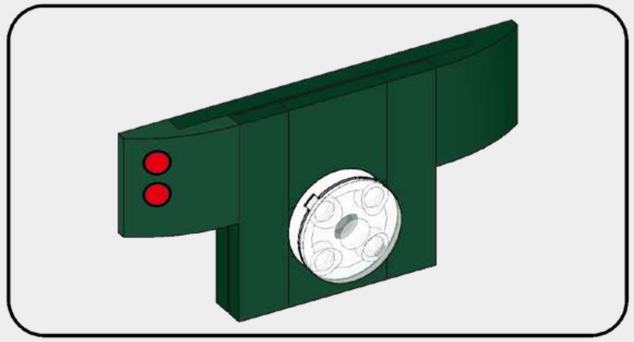

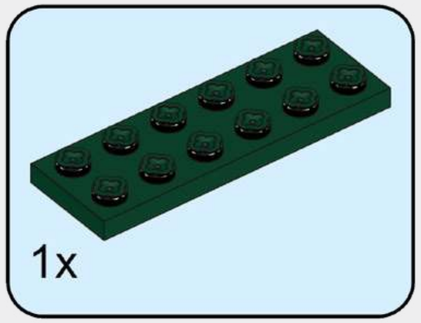

31

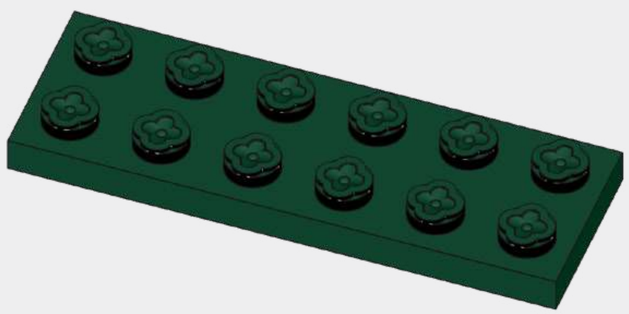

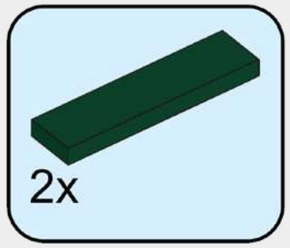

32

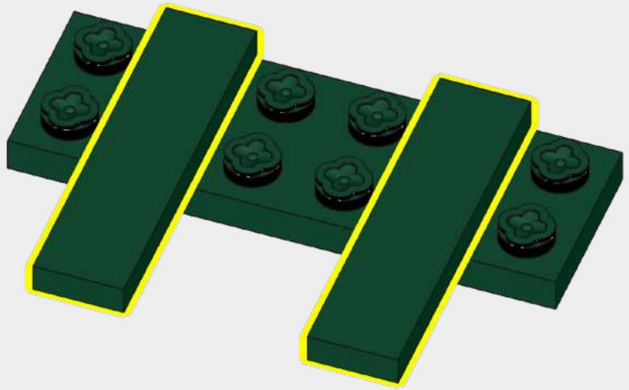

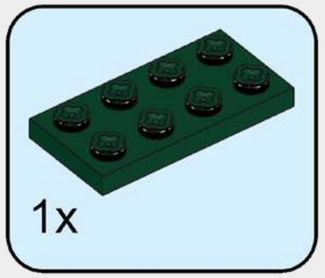

33

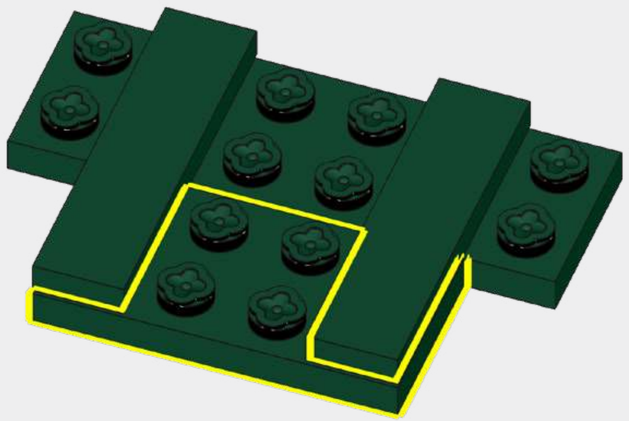

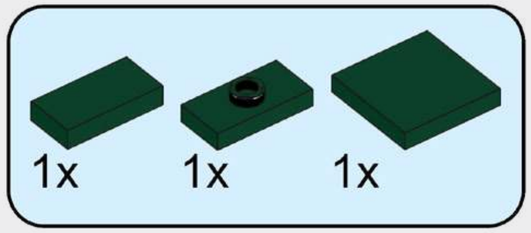

34

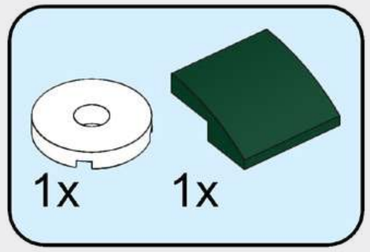

35

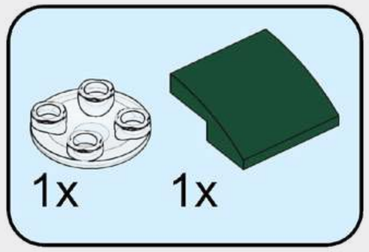

36

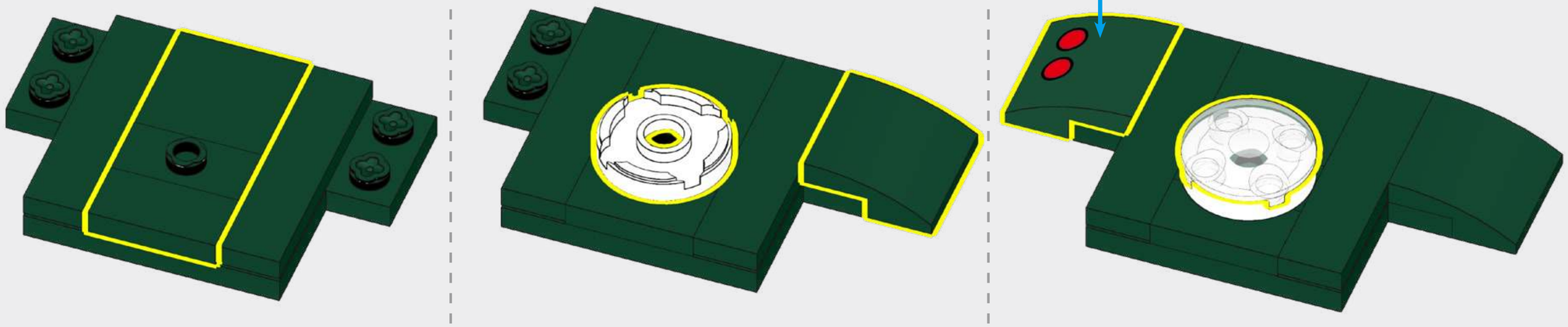

37

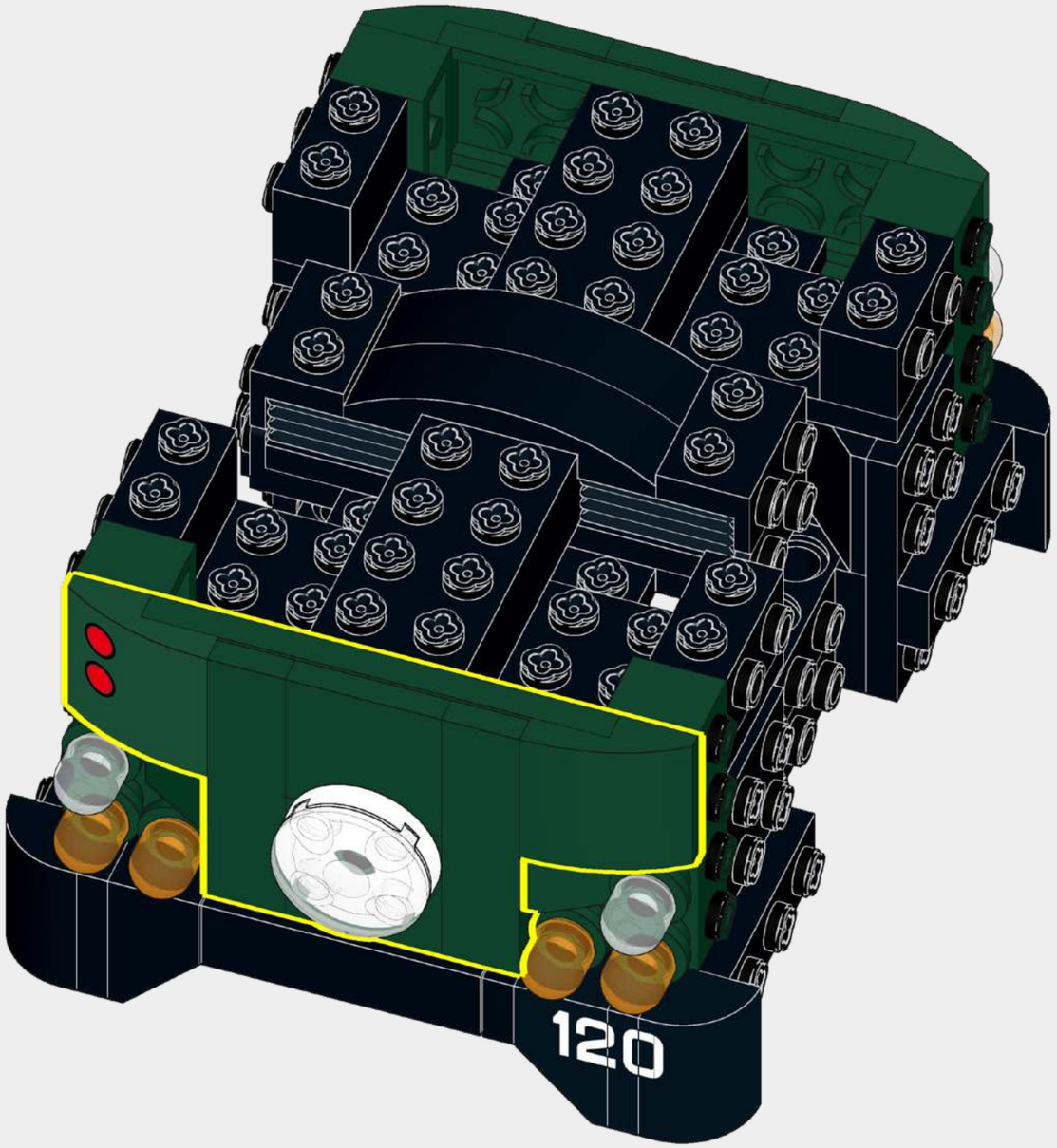

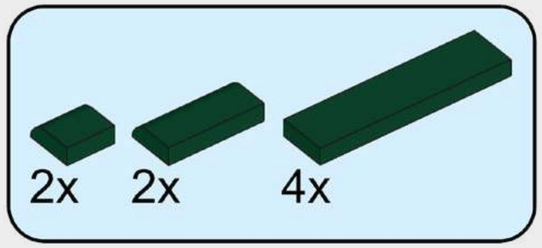

38

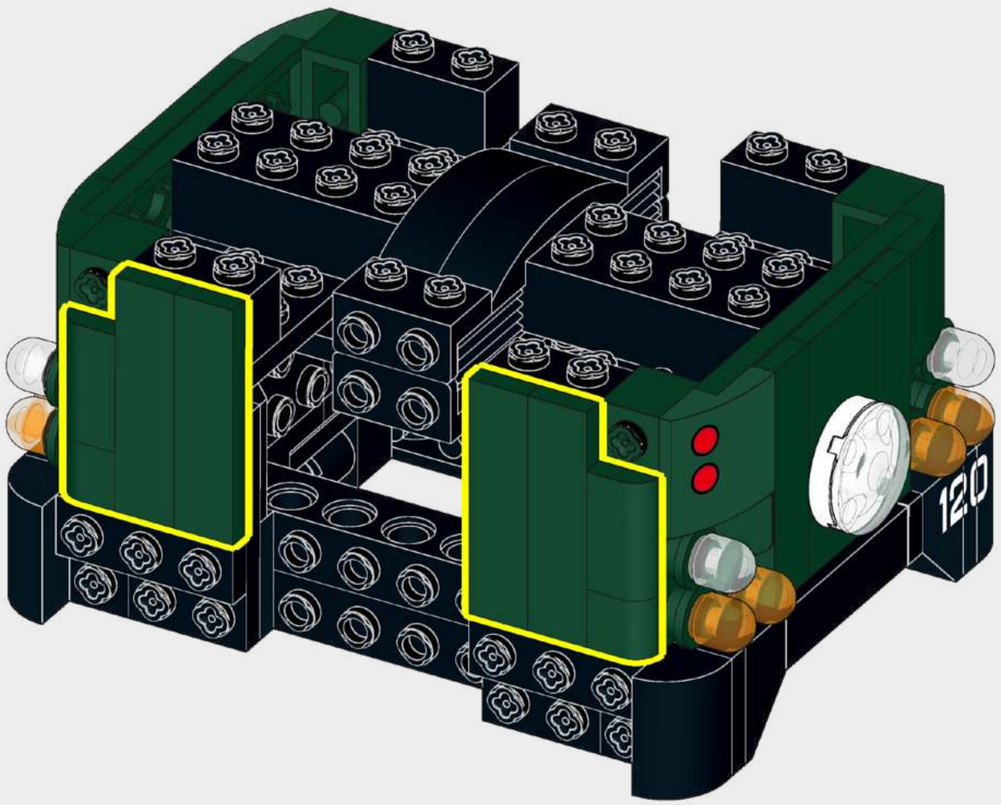

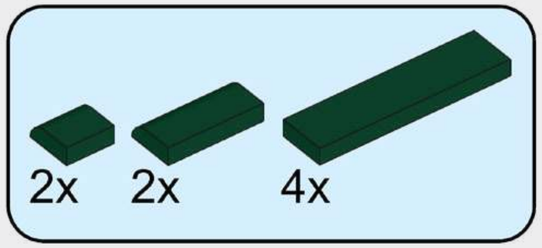

39

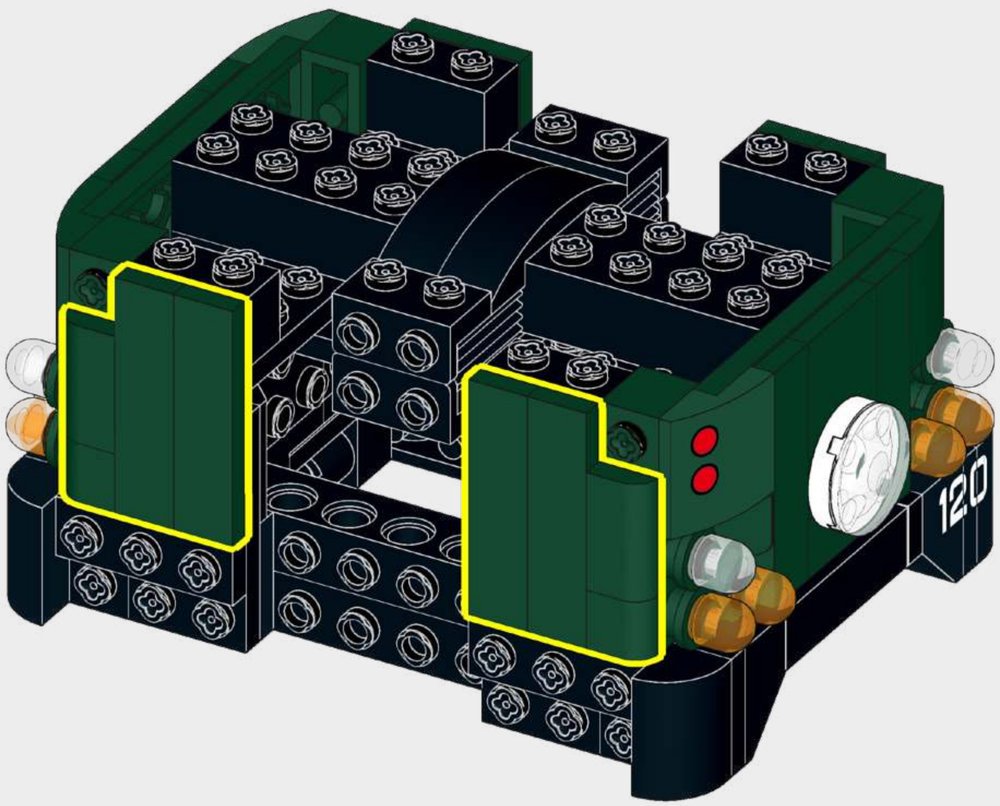

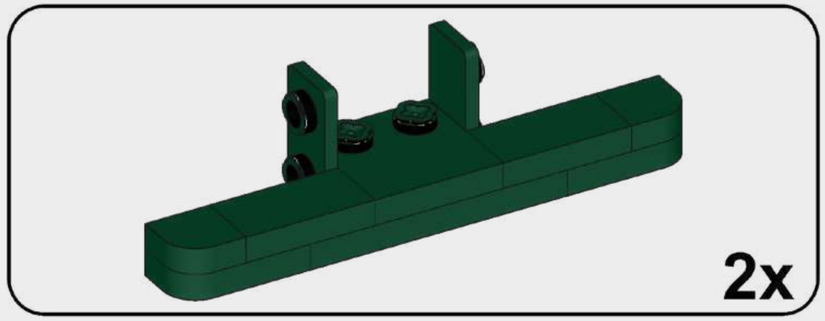

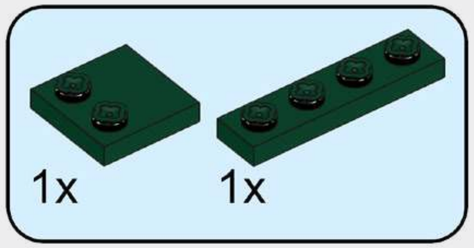

40

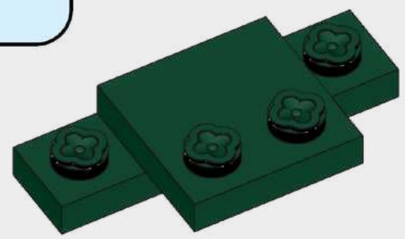

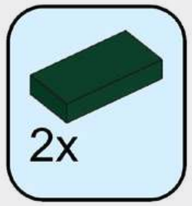

41

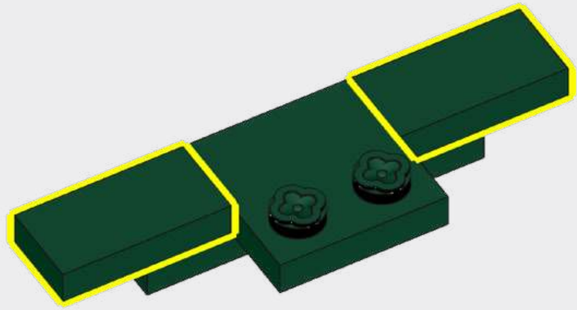

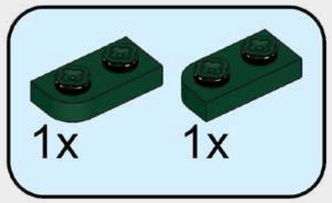

42

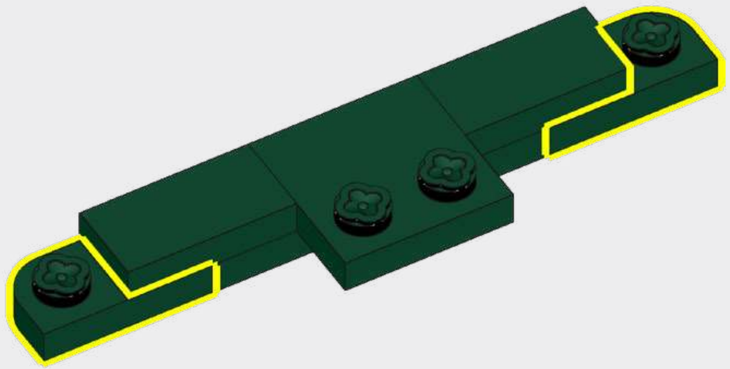

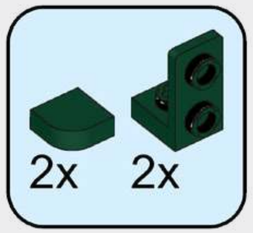

43

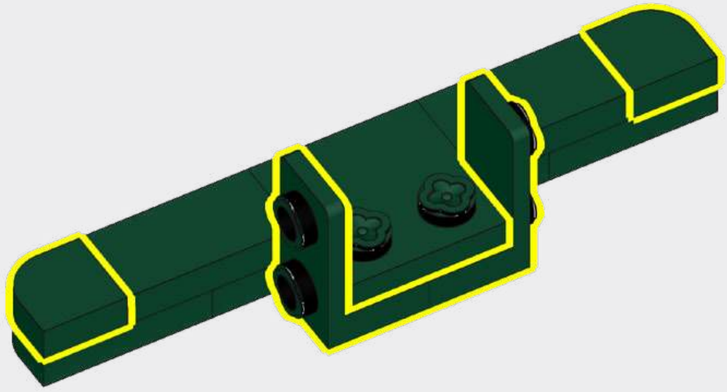

44

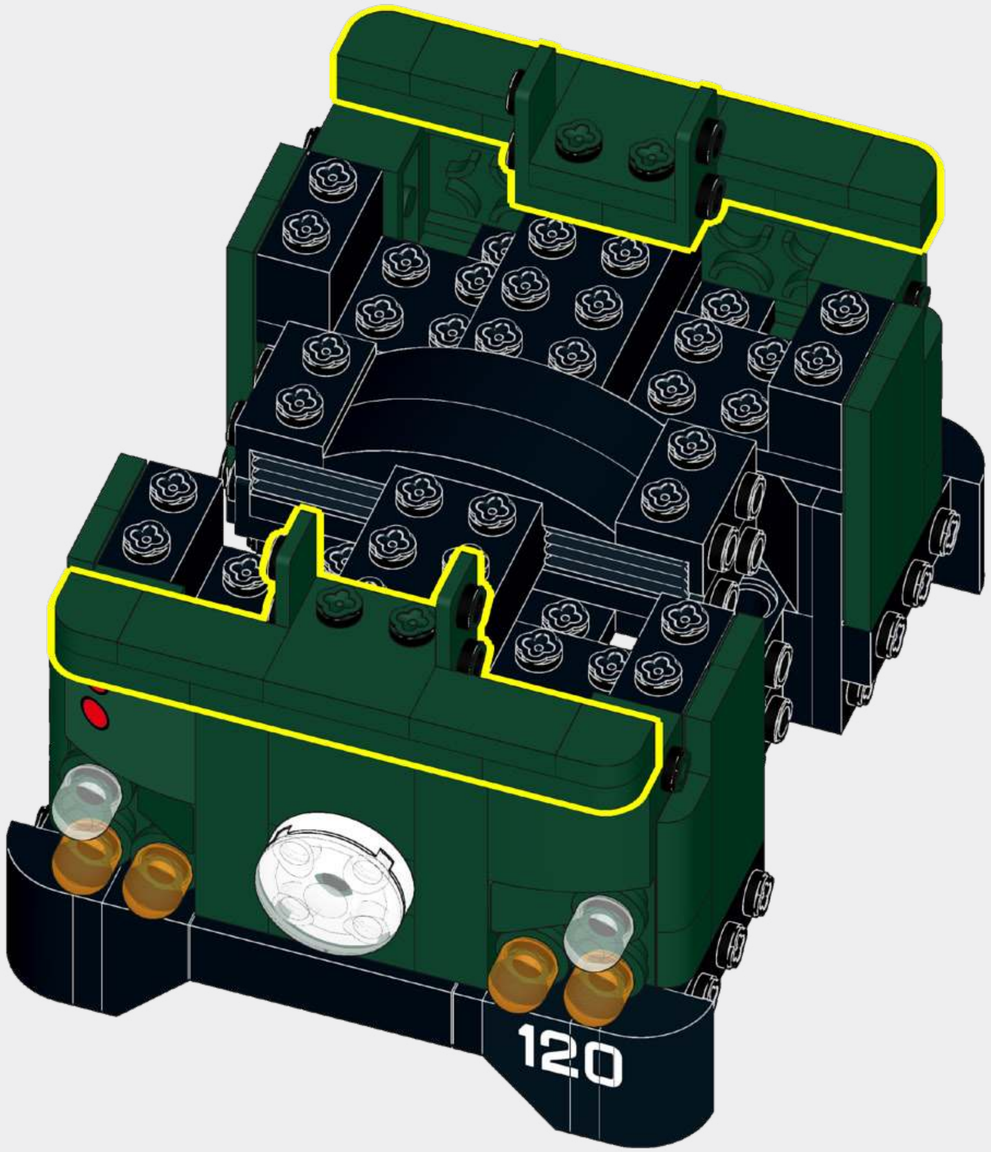

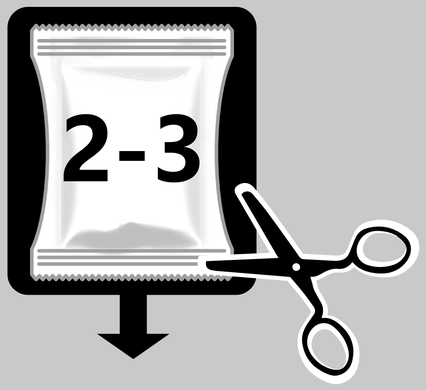
2-3

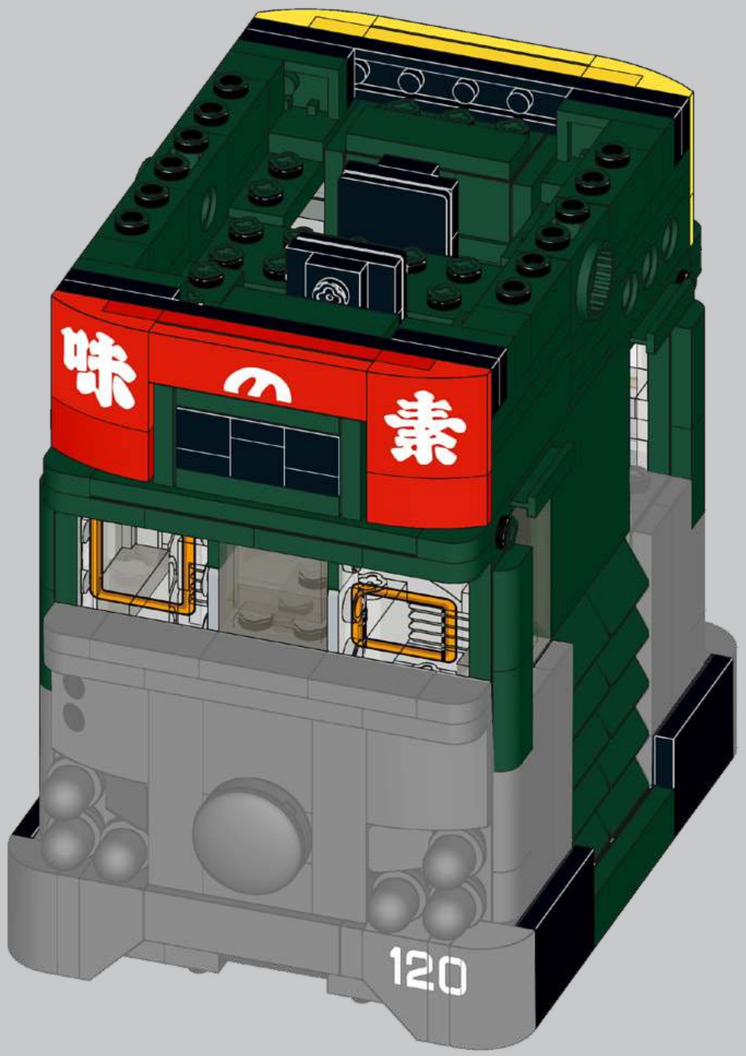
味
素
120

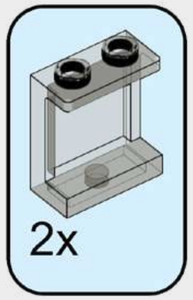

45

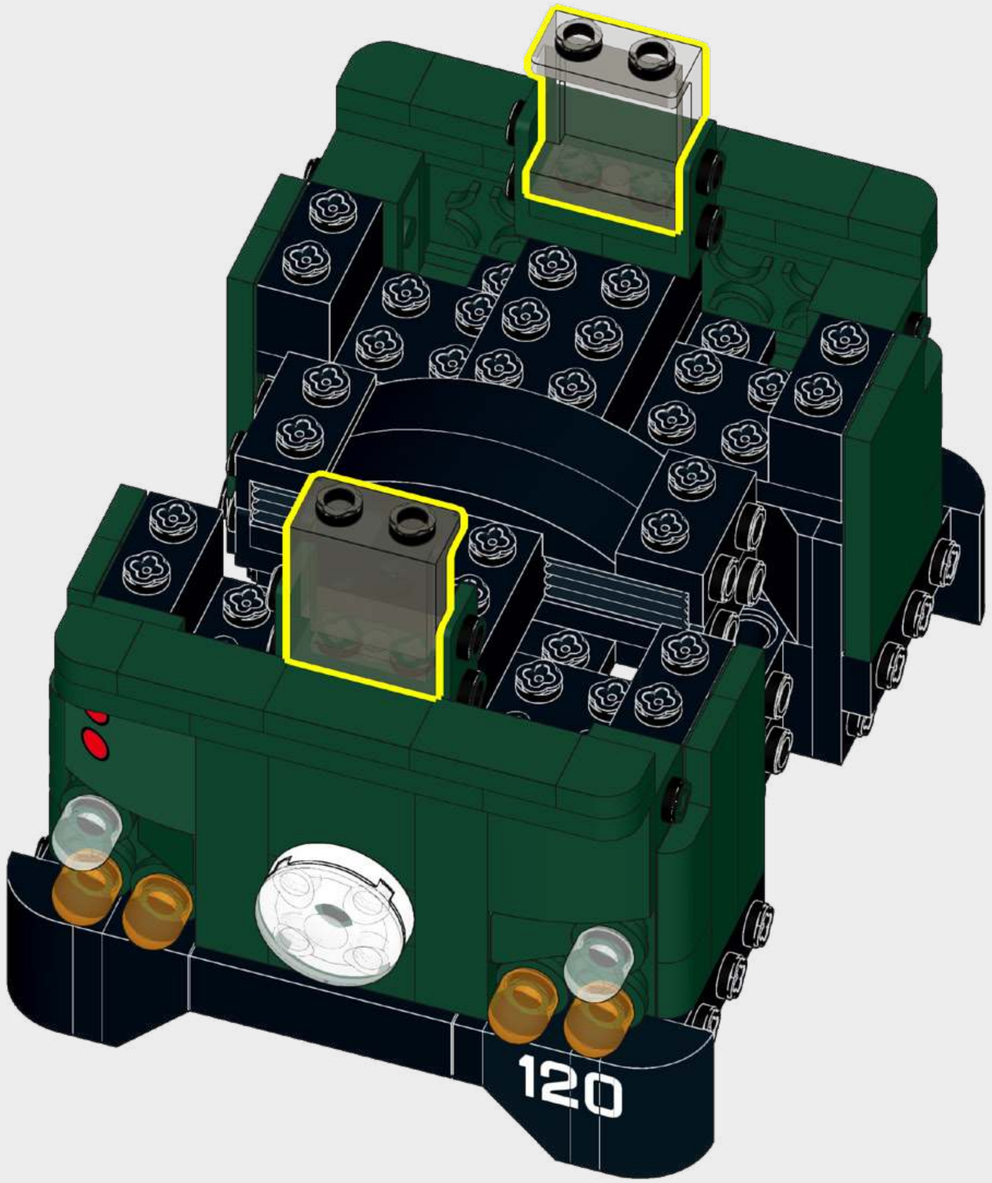

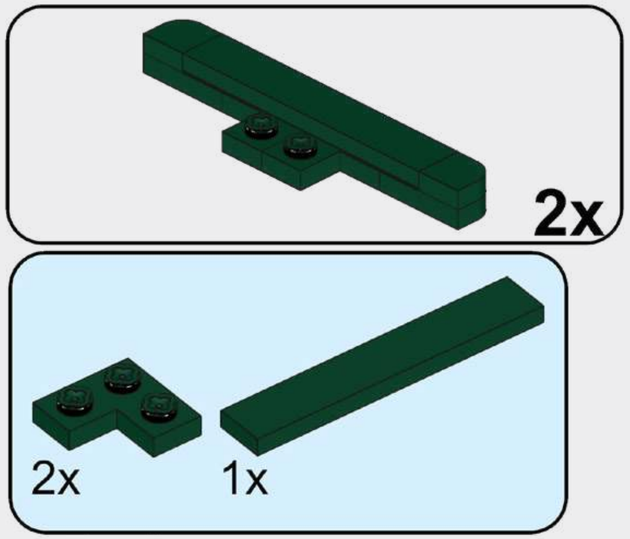

46

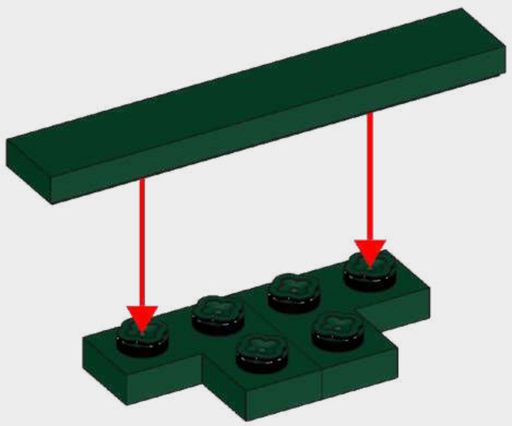

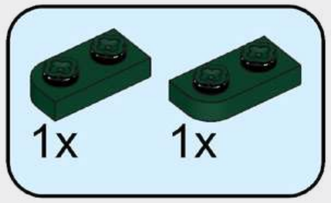

47

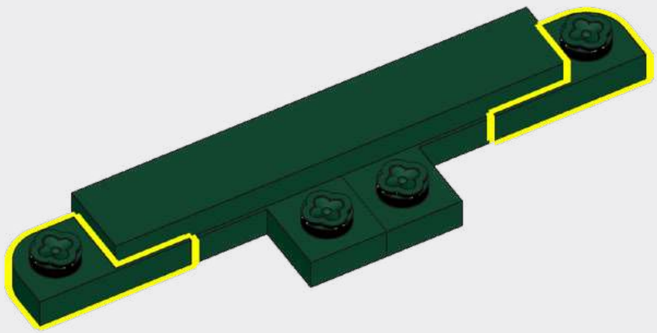

48

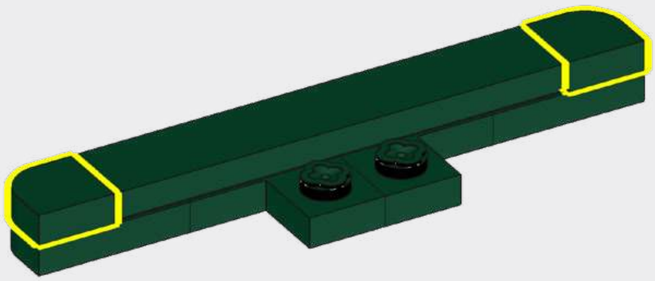

49

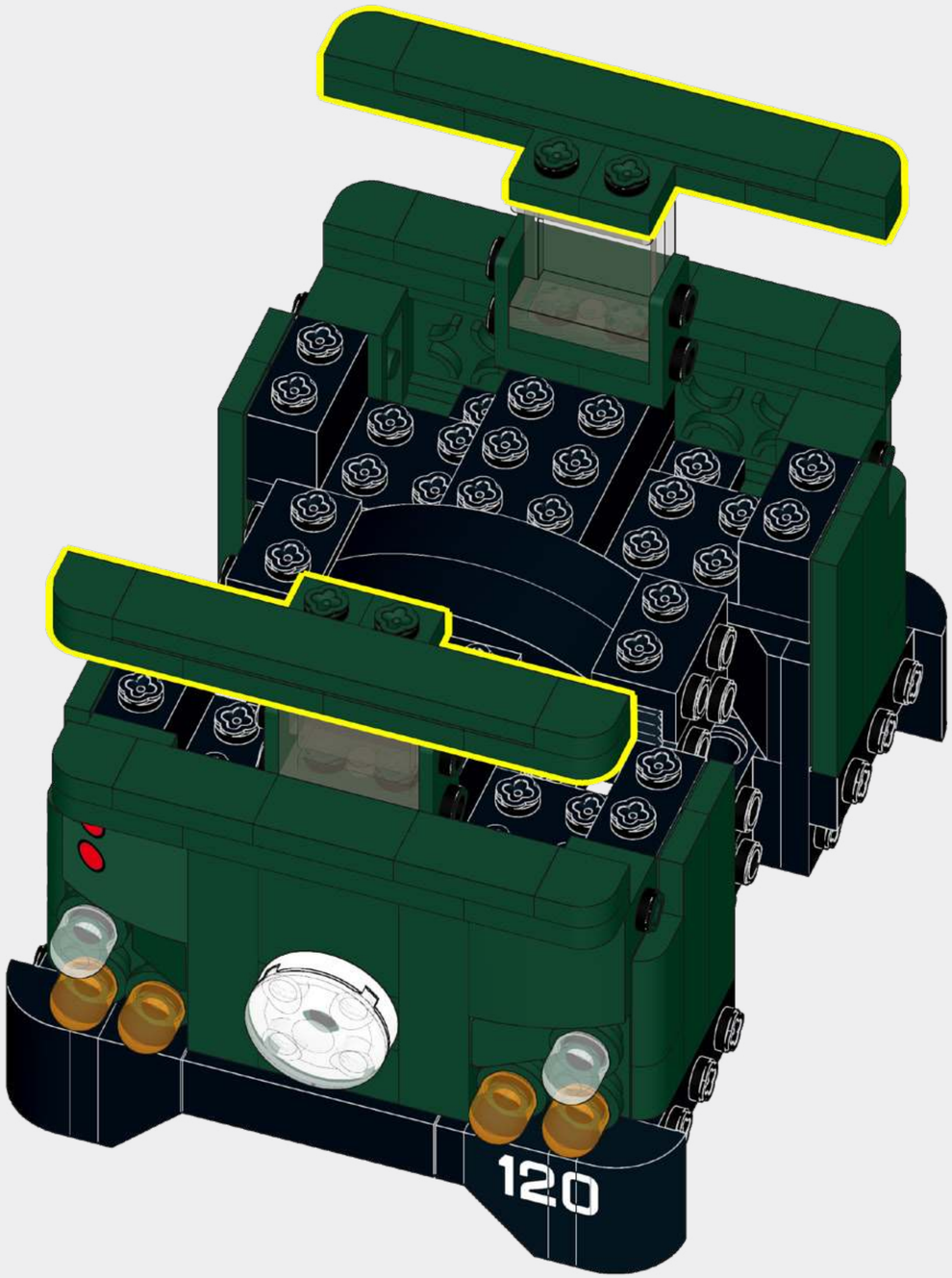

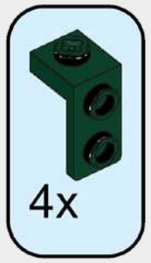

50

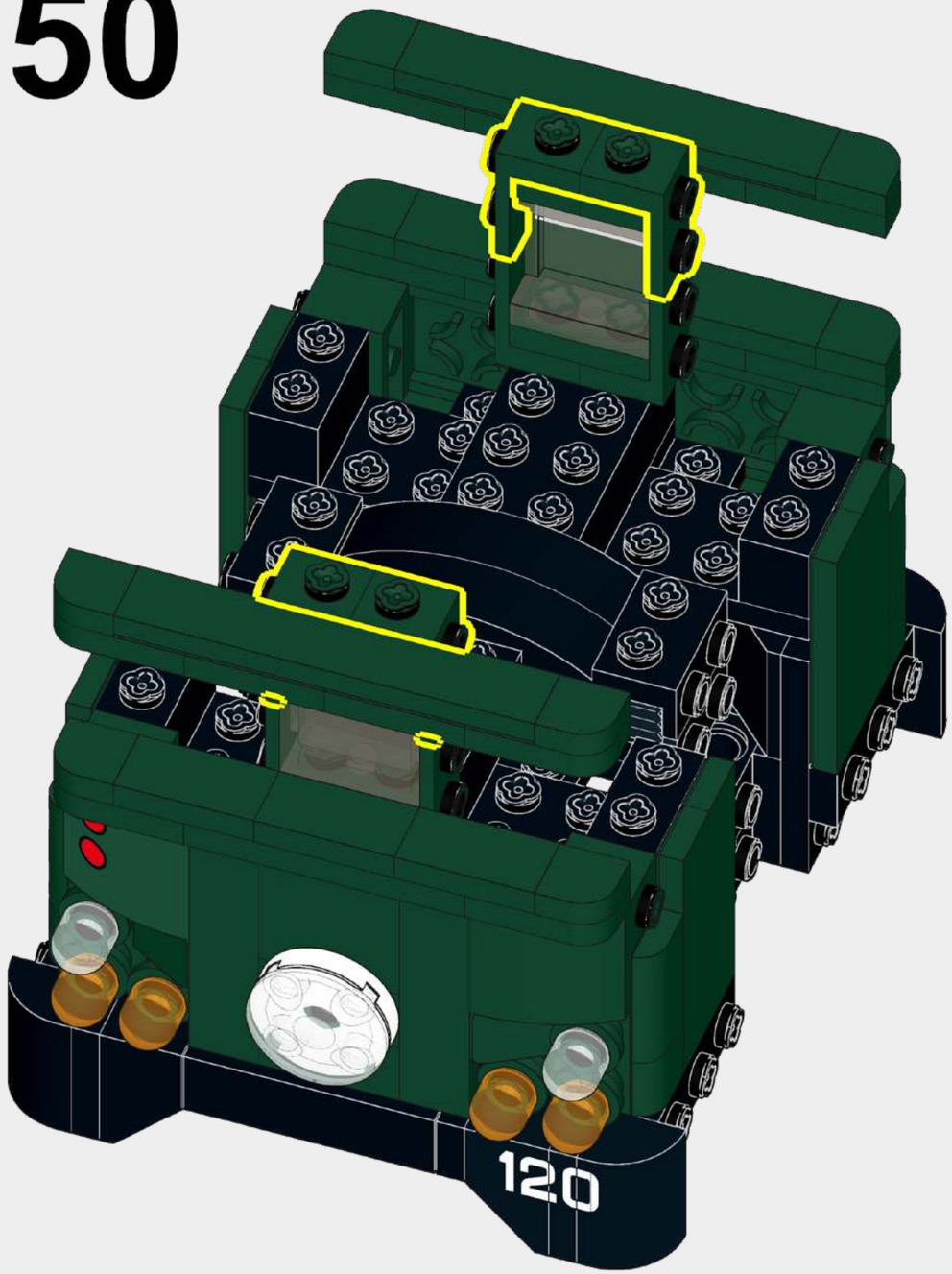

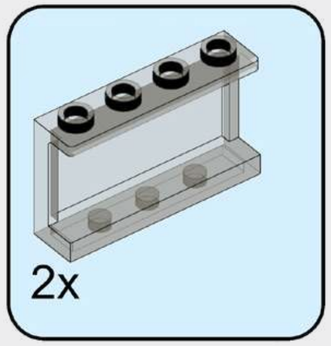

51

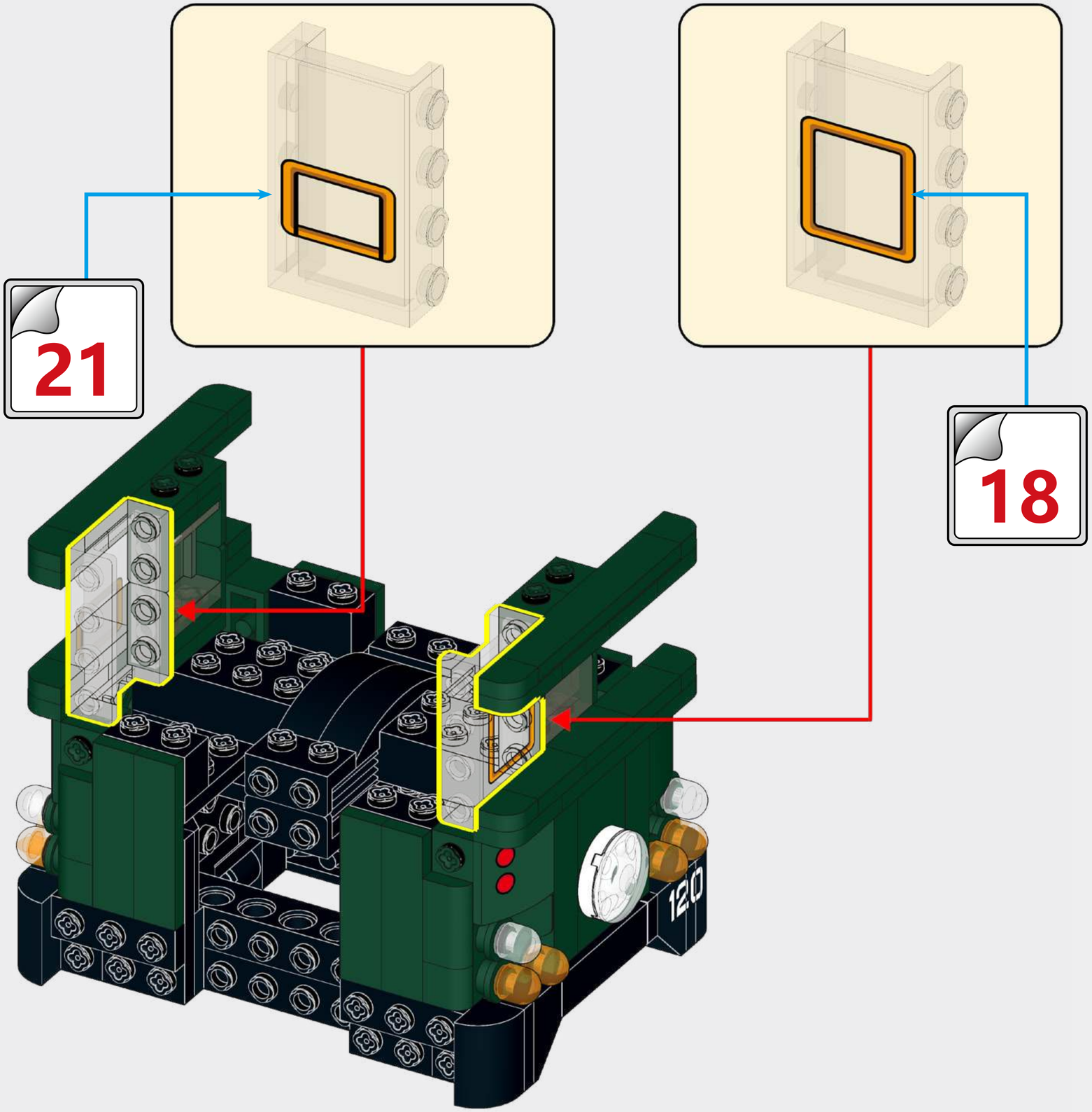

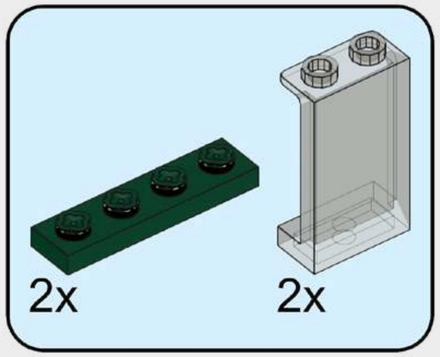

52

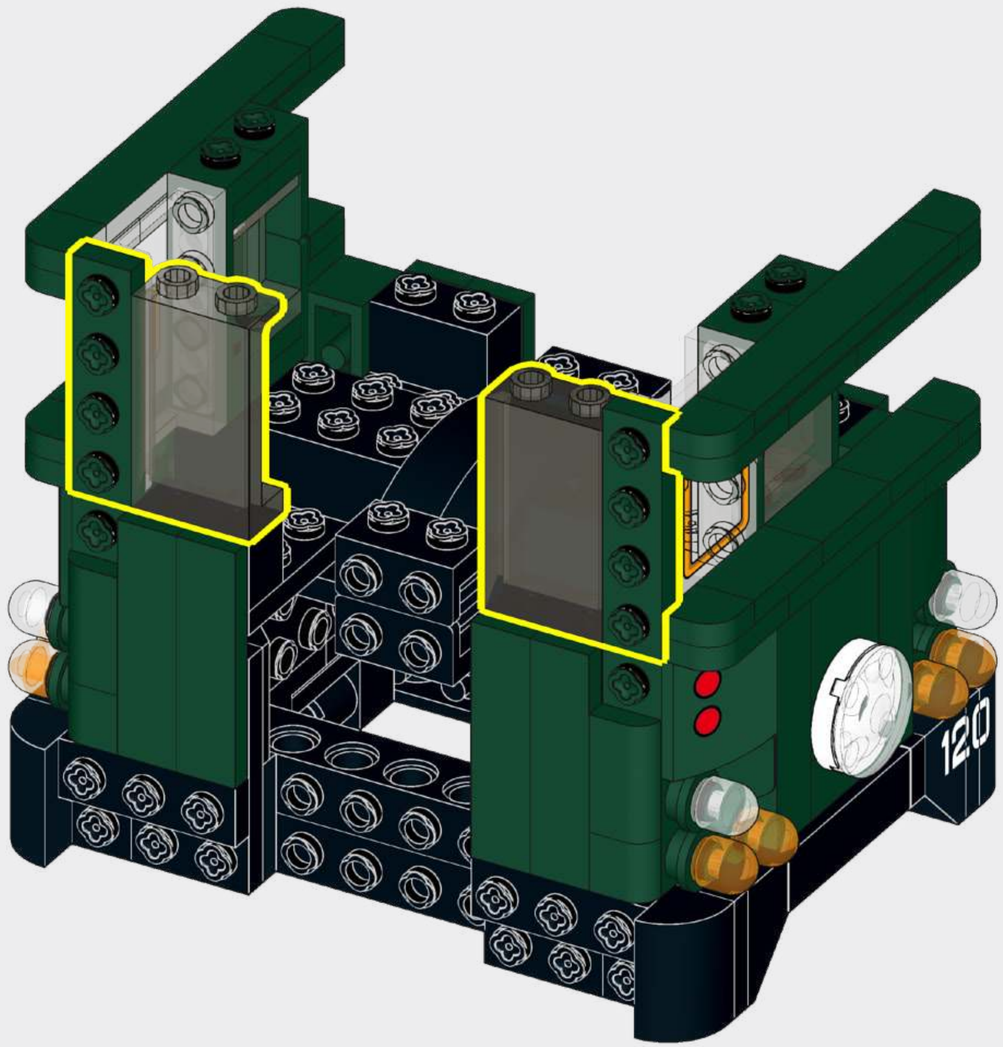

53

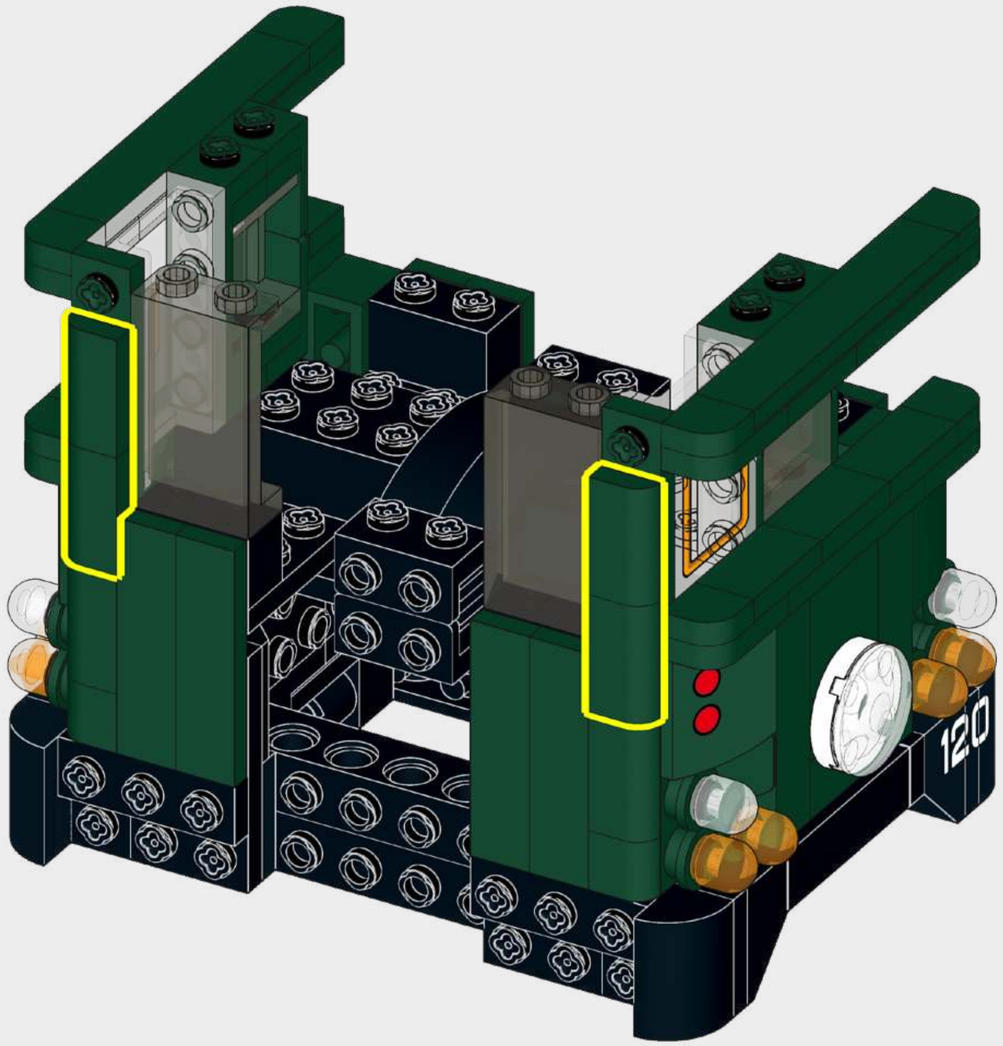

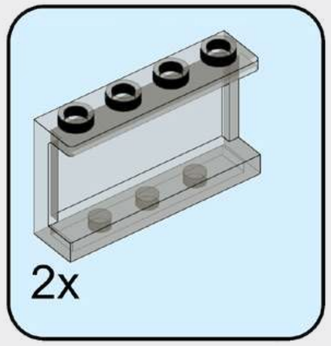

54

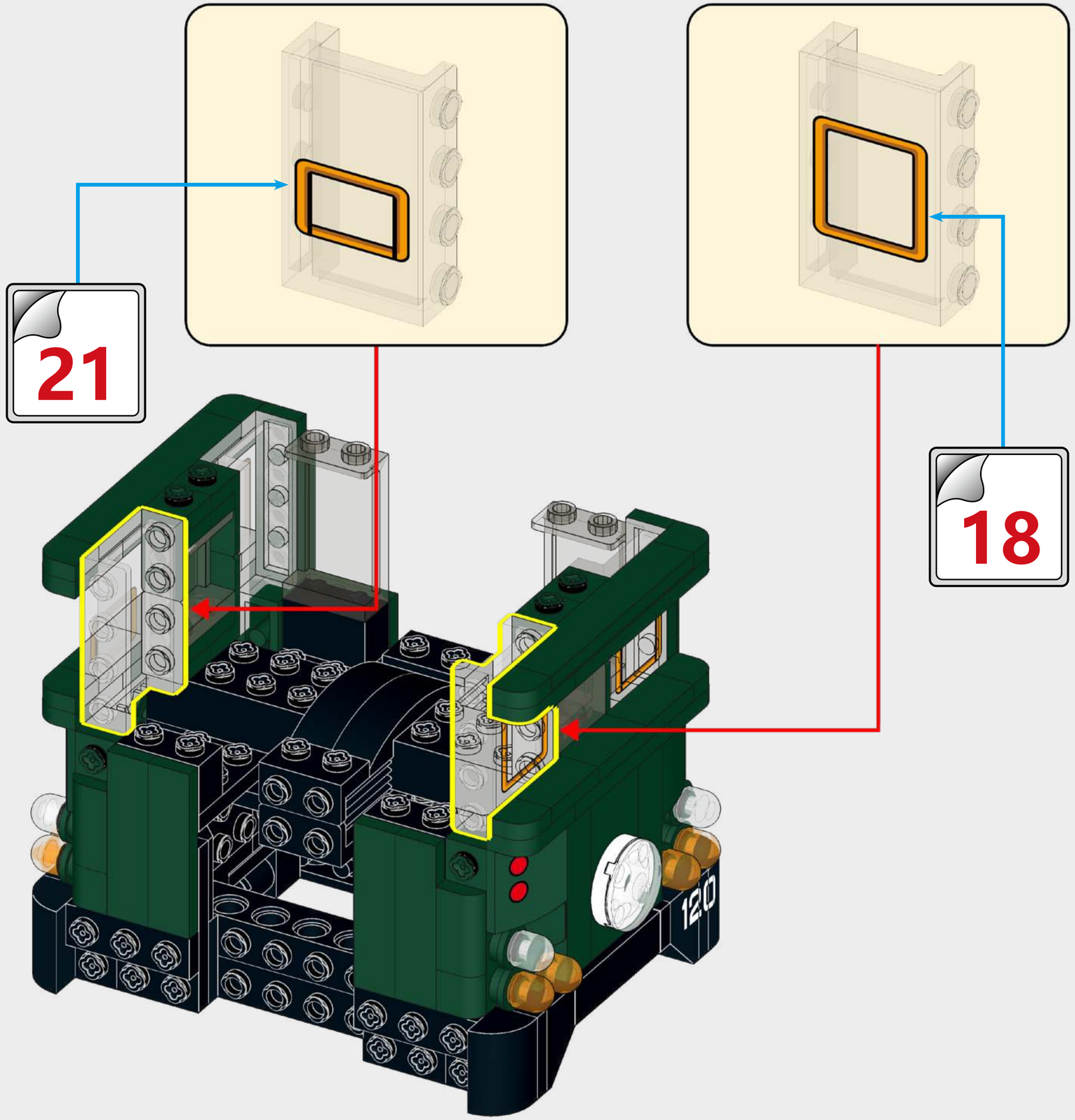

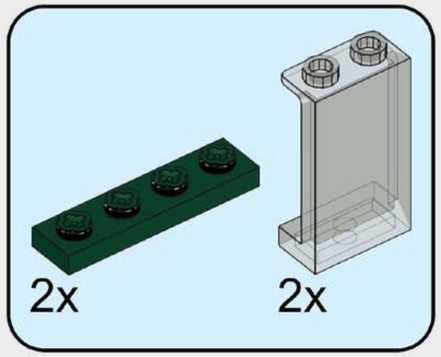

55

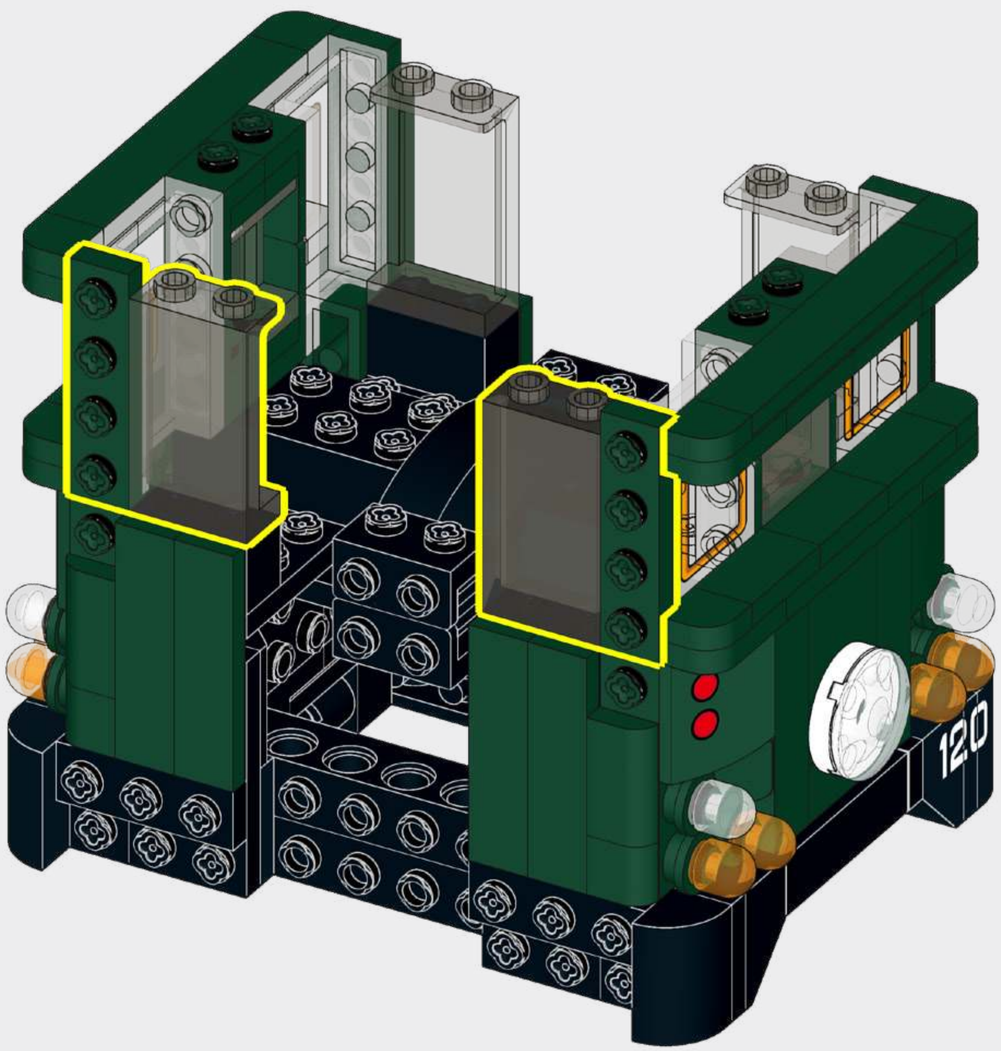

56

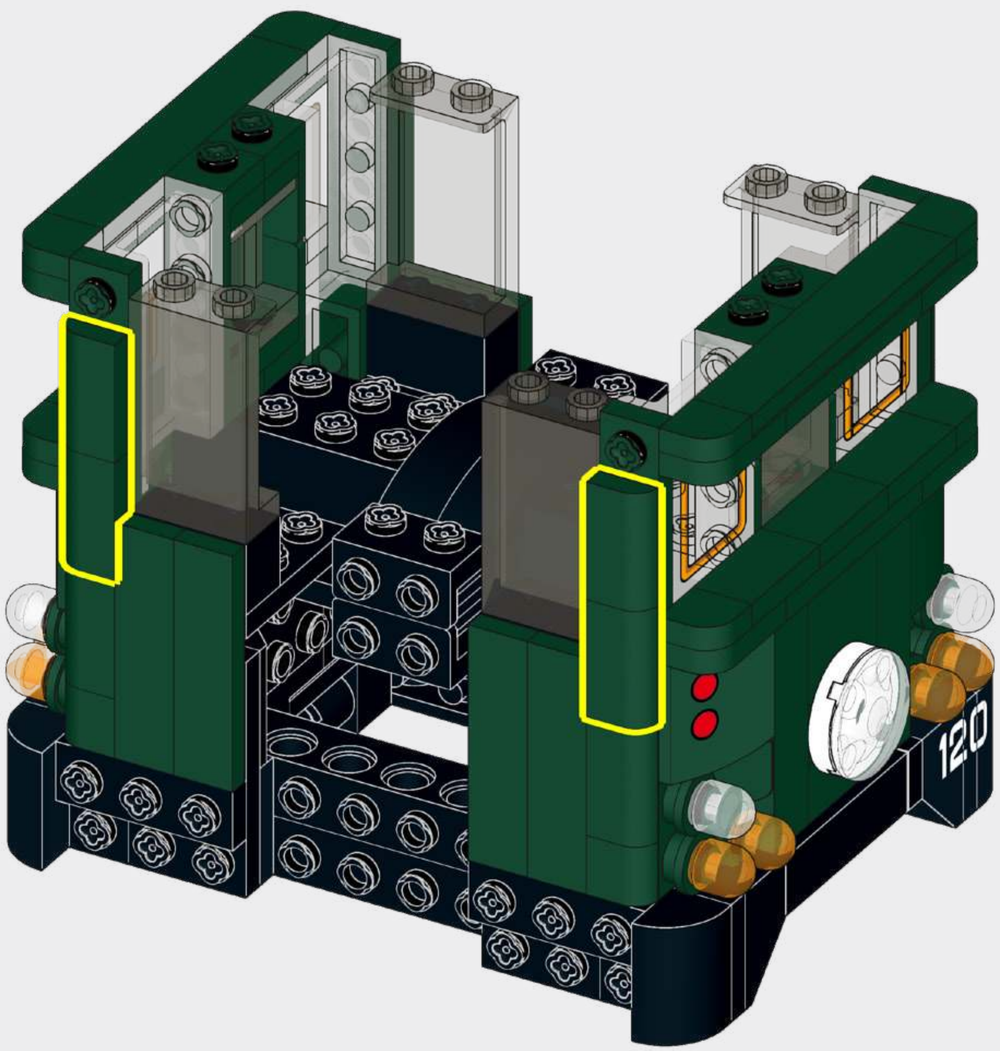

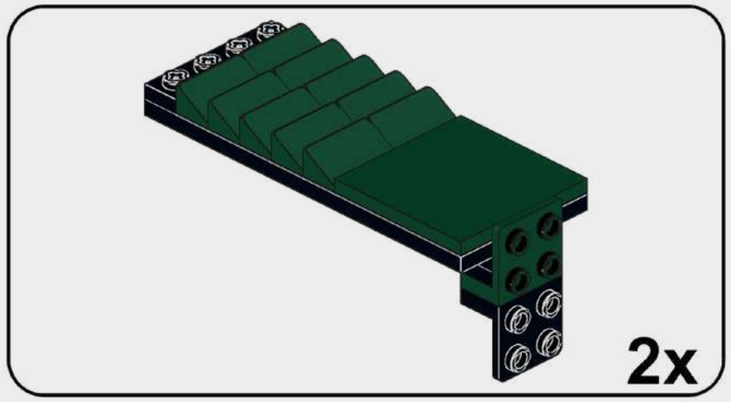

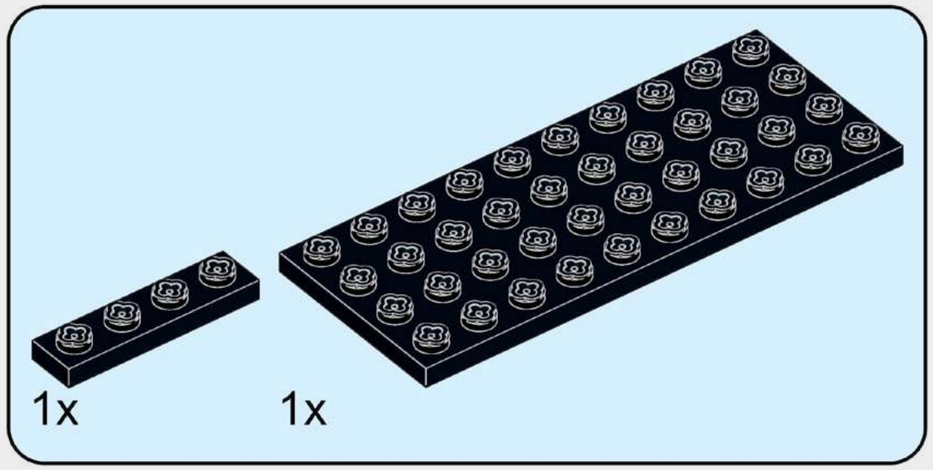

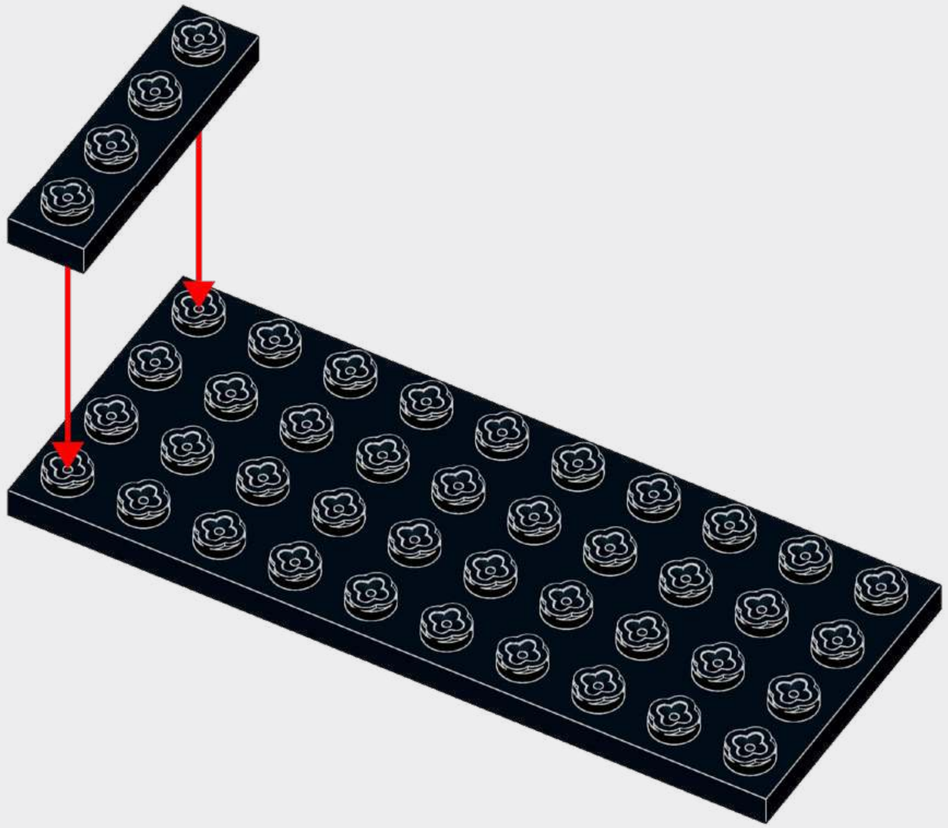

57

58

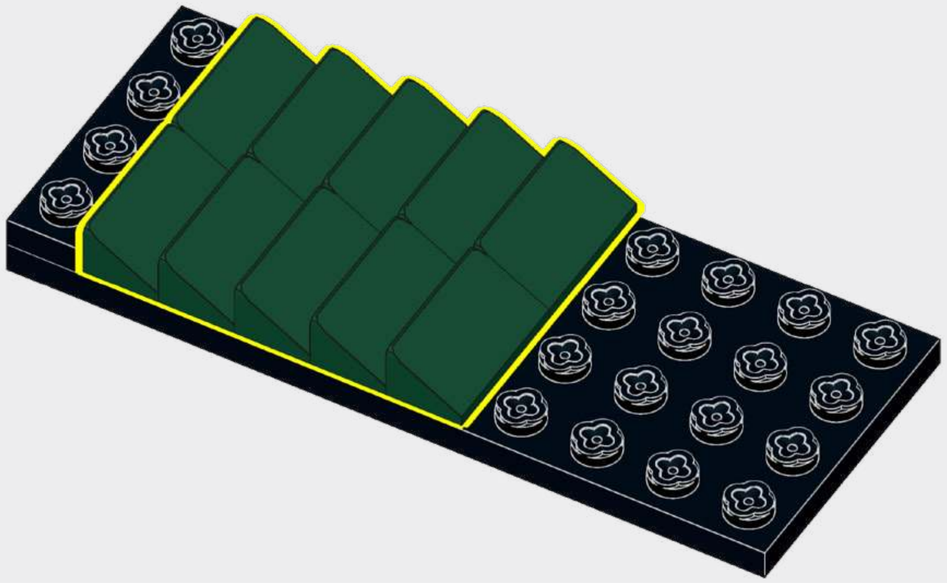

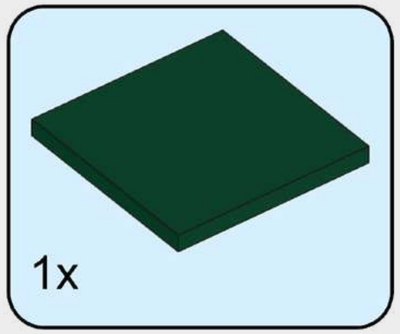

59

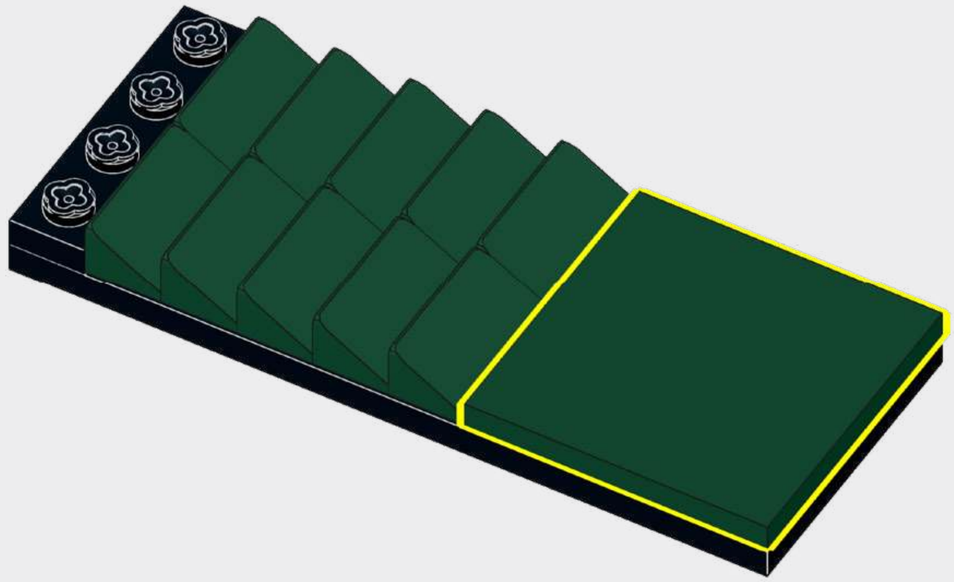

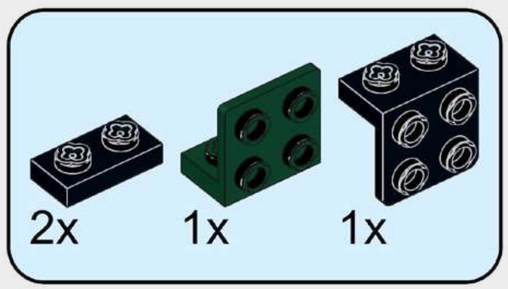

60

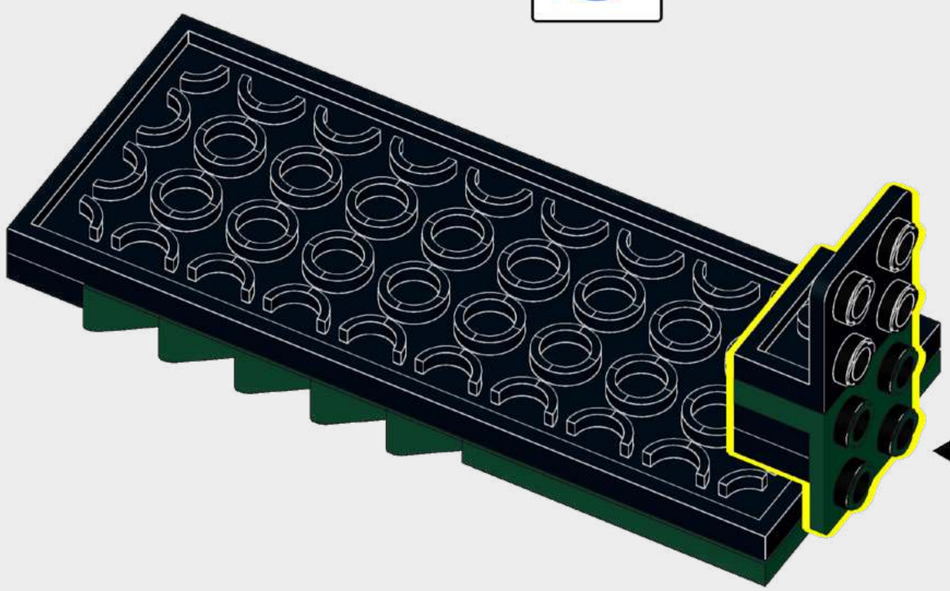

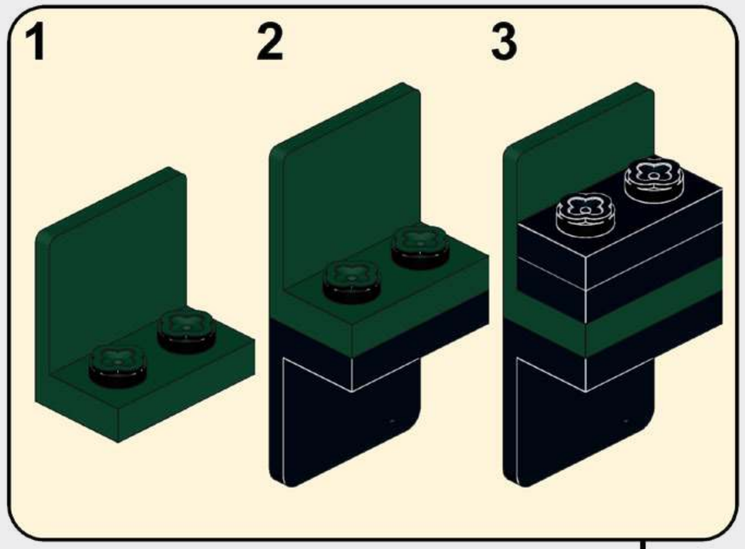

61

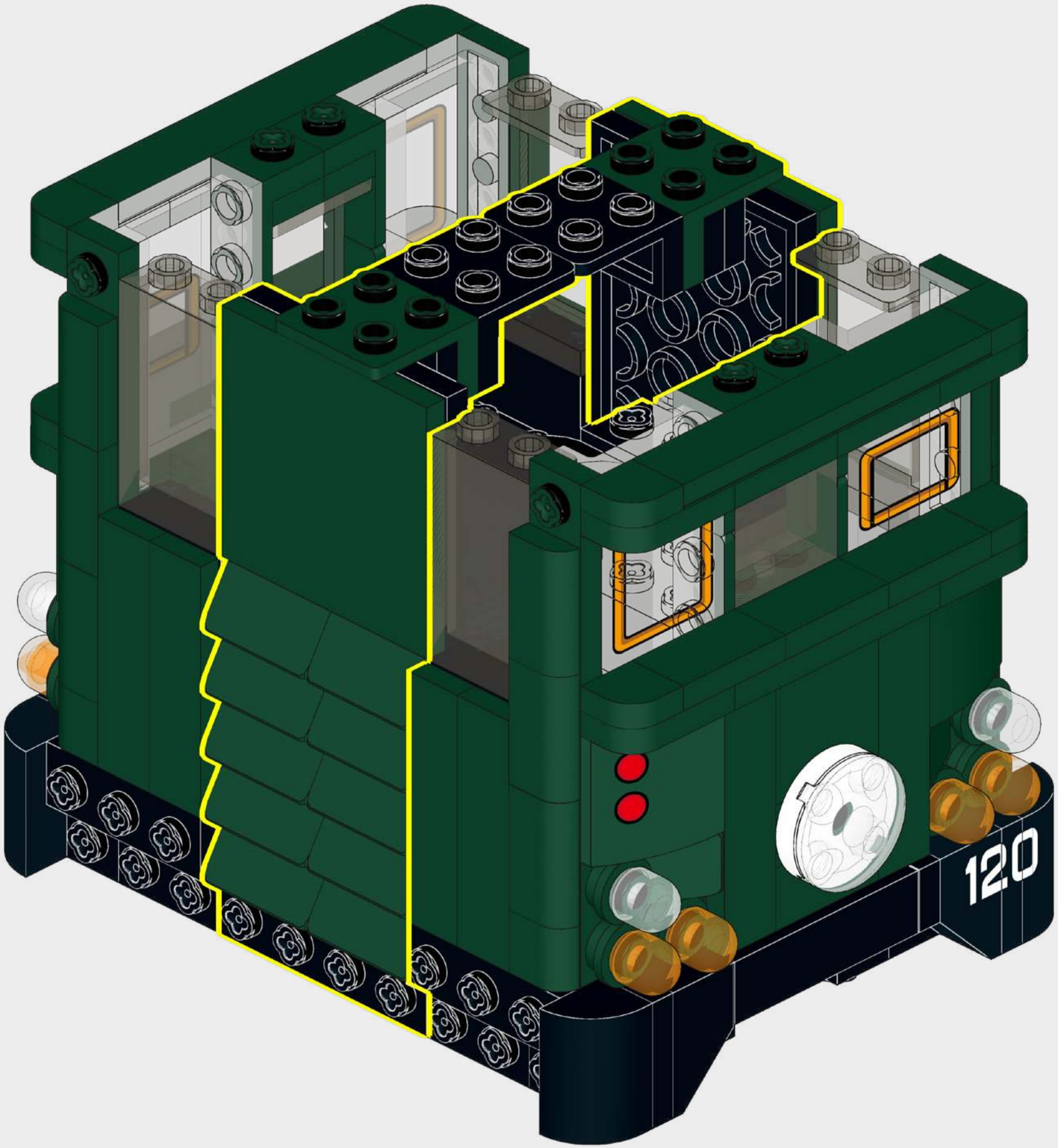

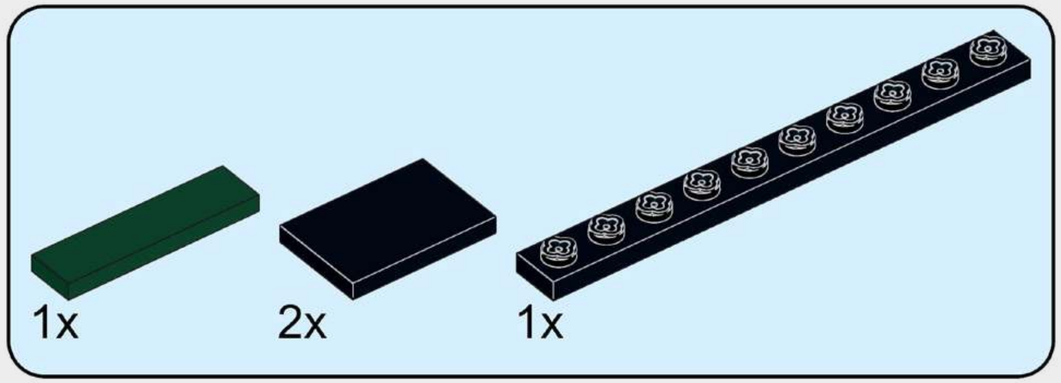

62

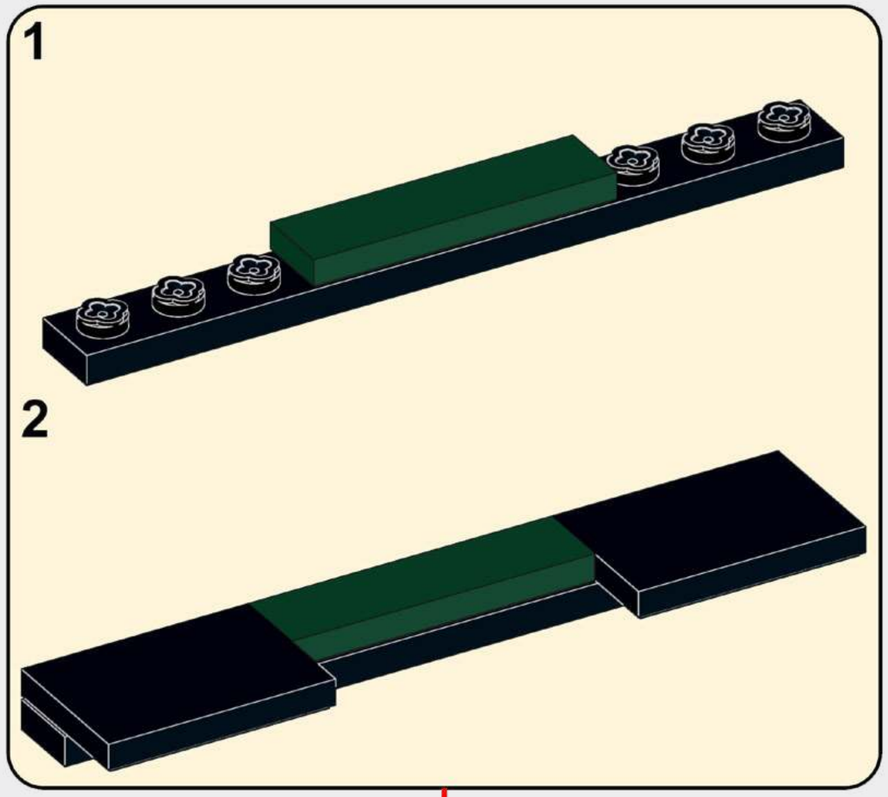

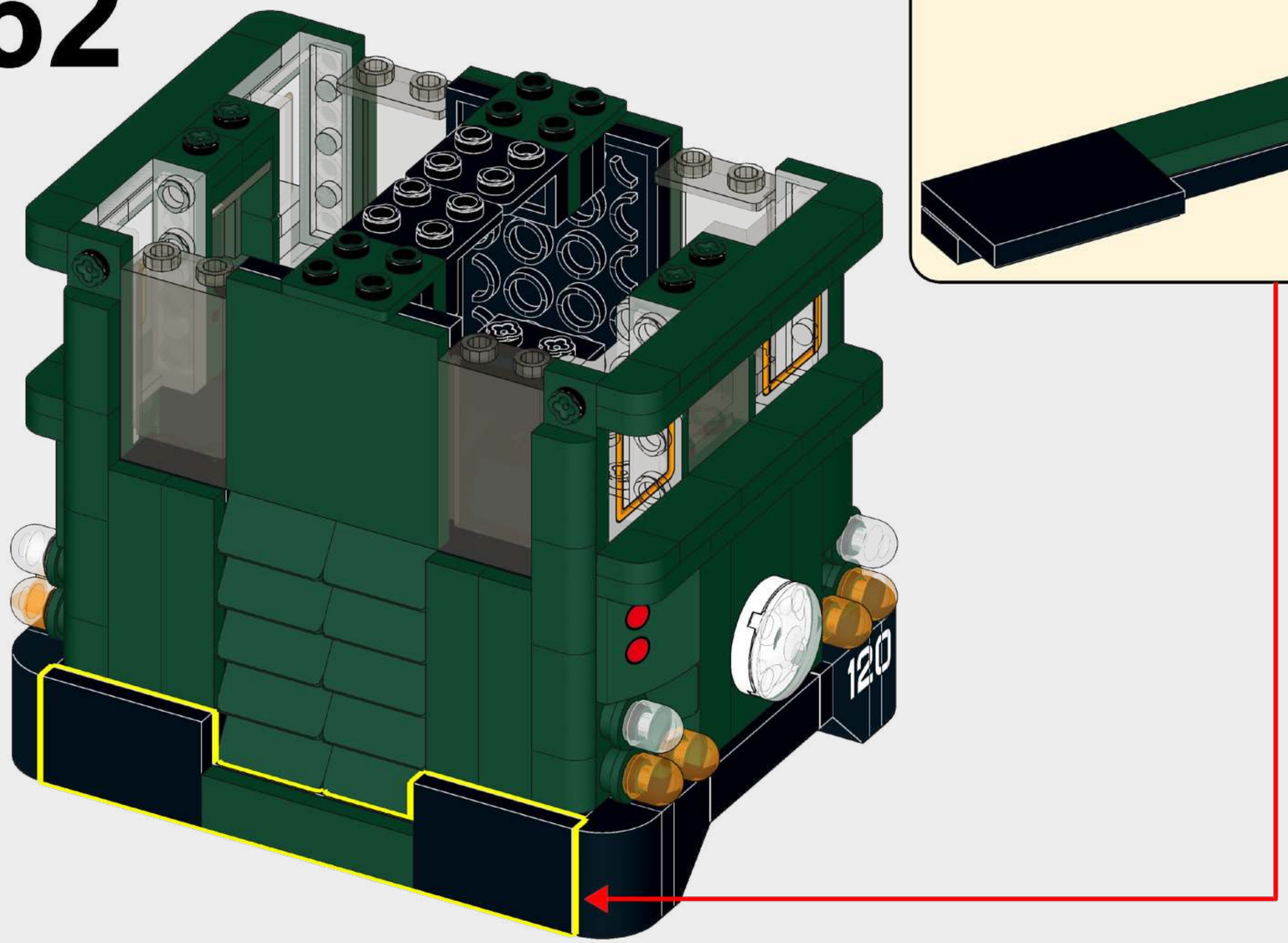

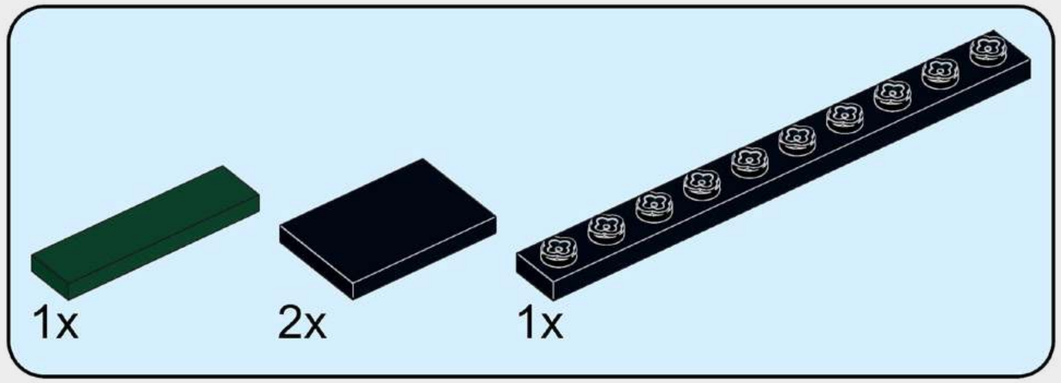

63

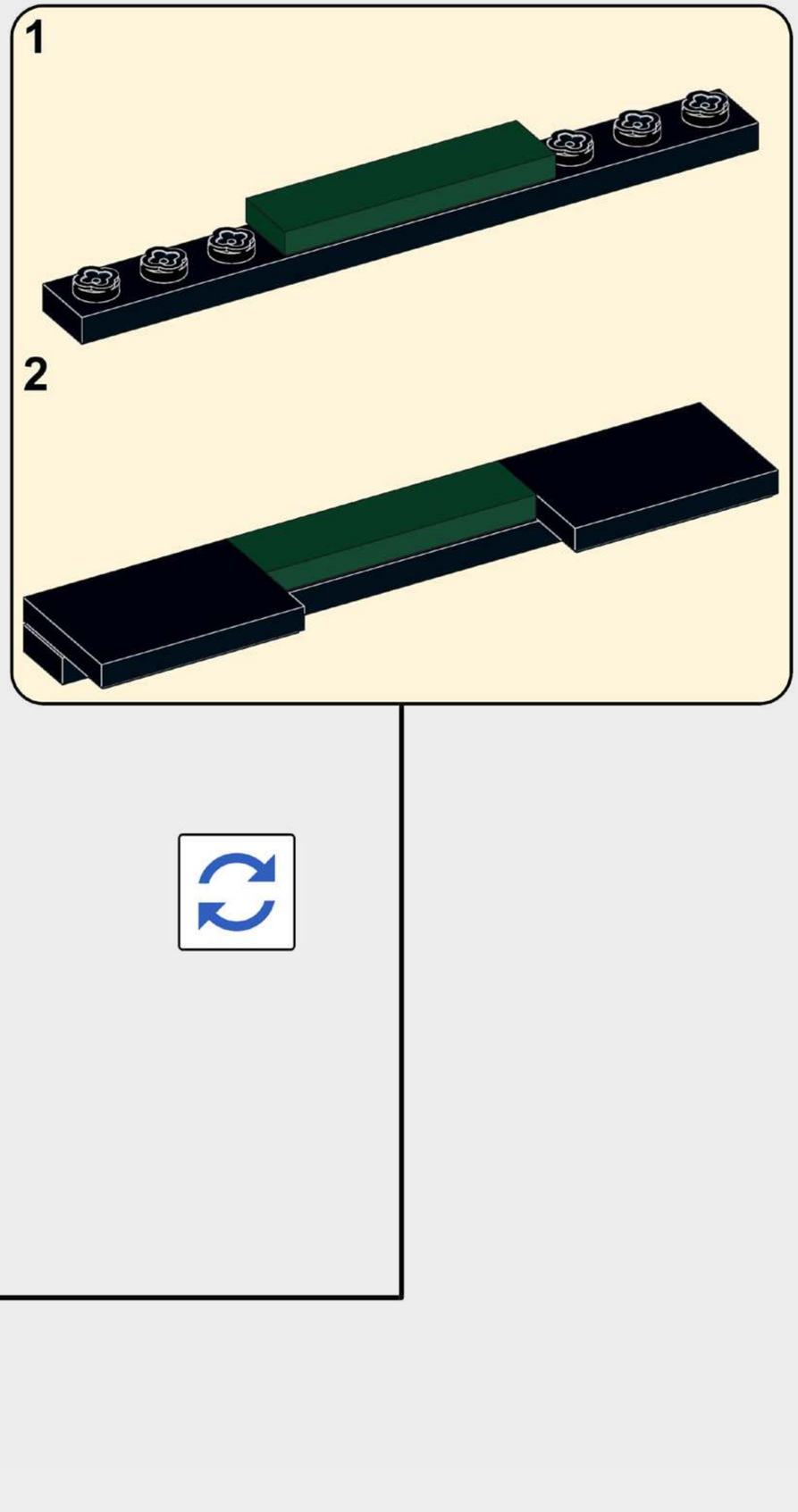

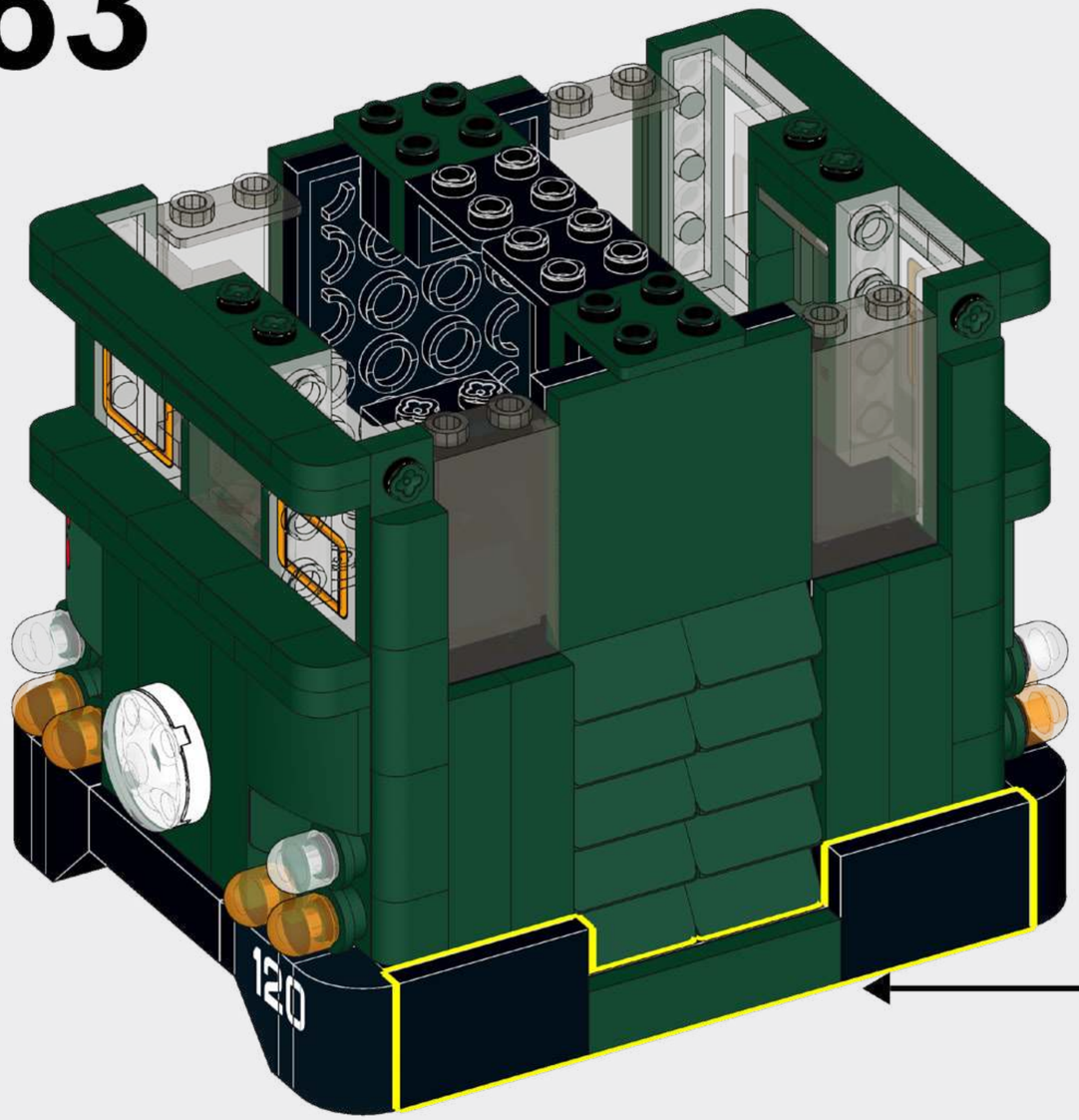

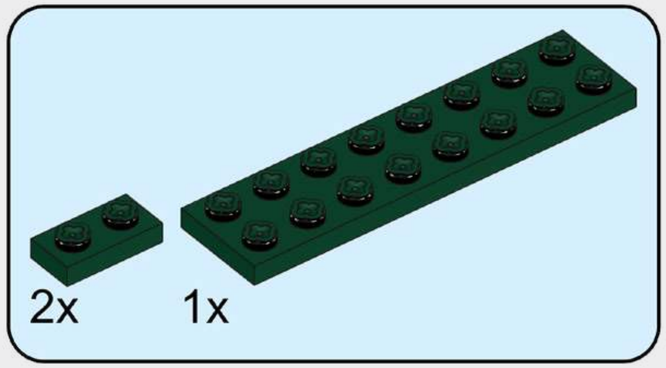

64

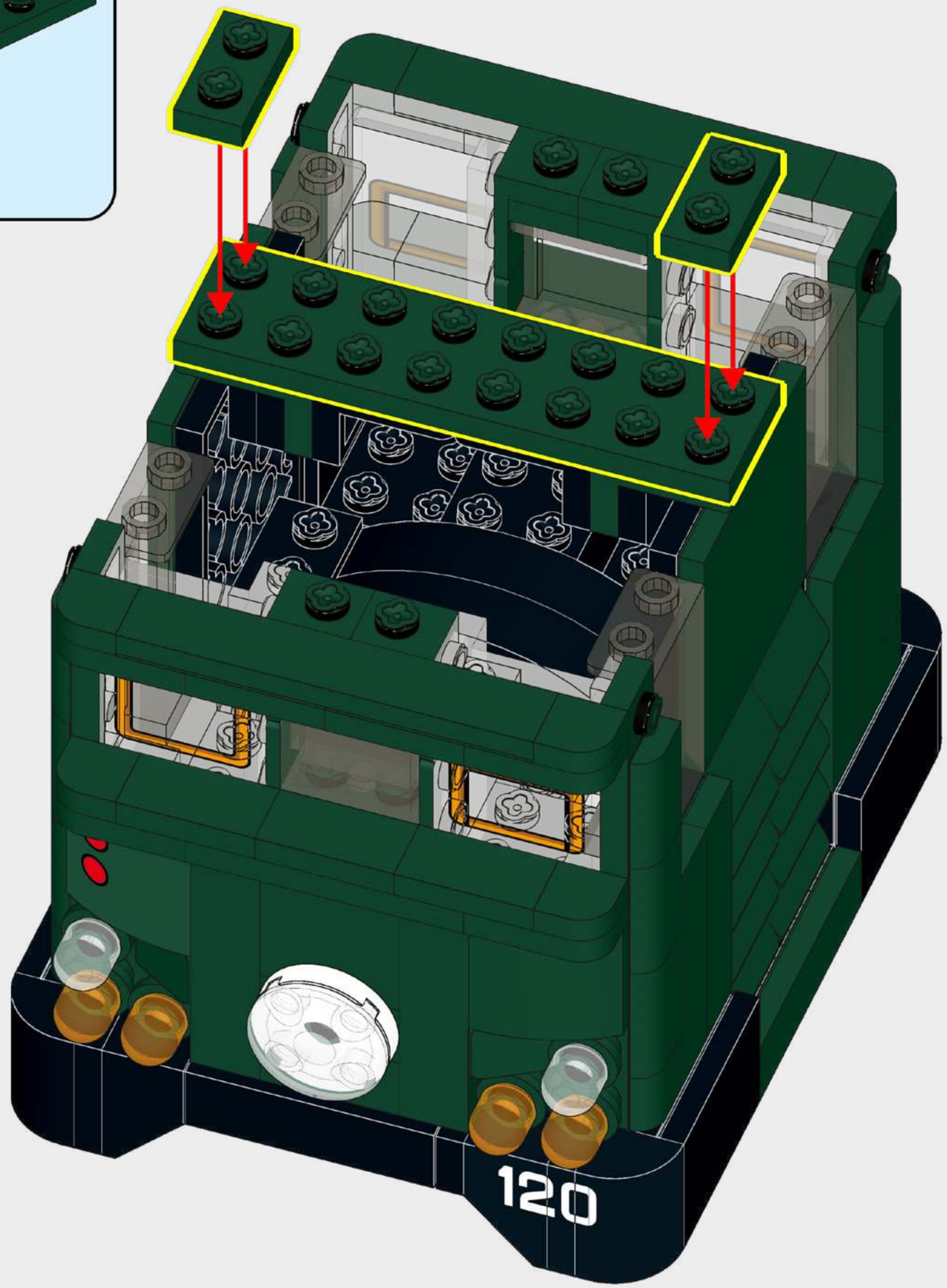

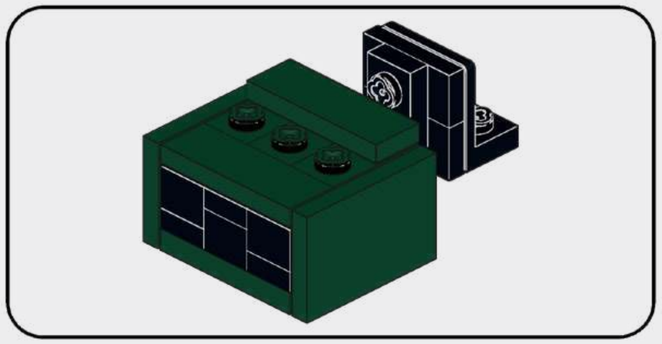

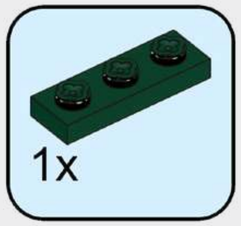

65

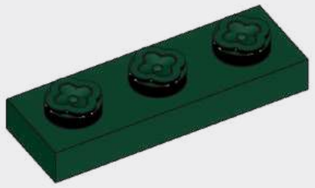

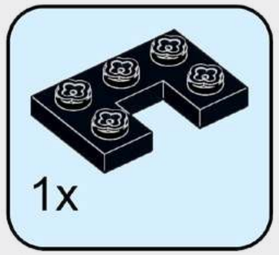

66

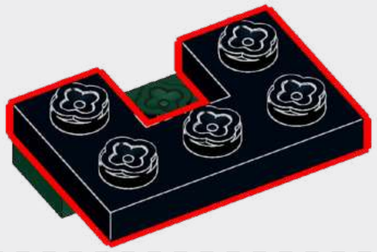

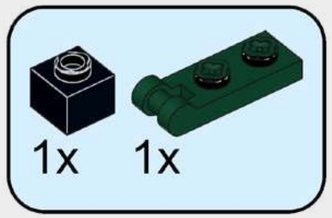

67

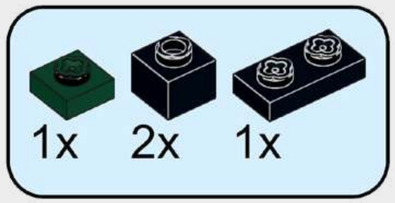

68

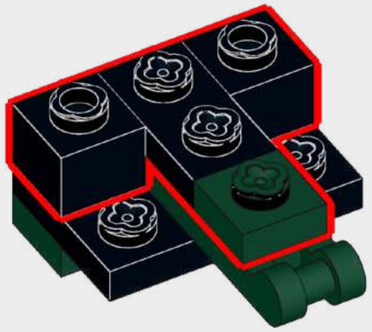

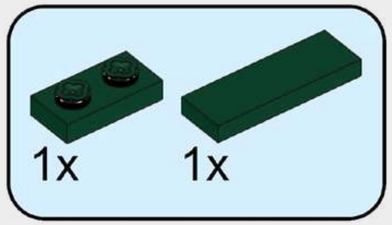

69

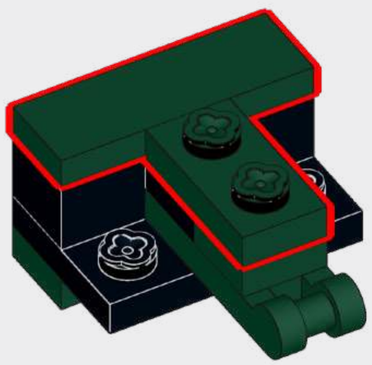

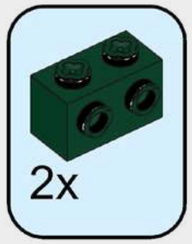

70

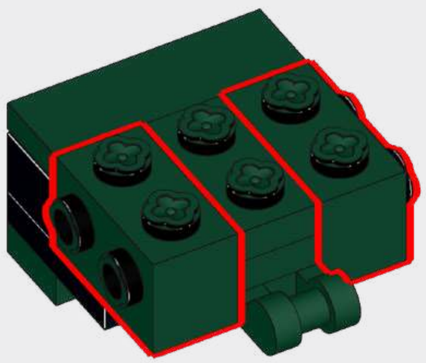

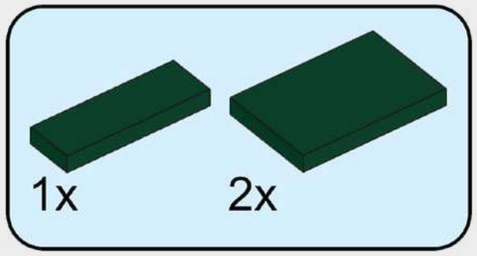

71

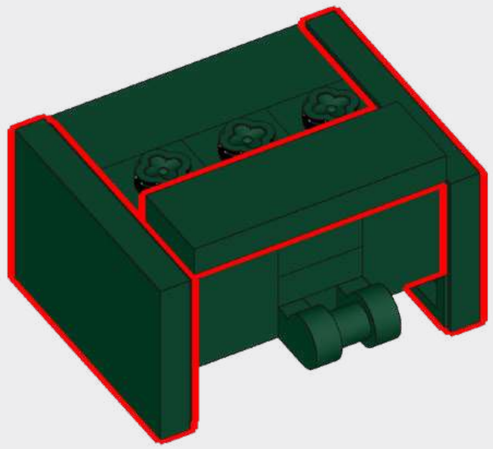

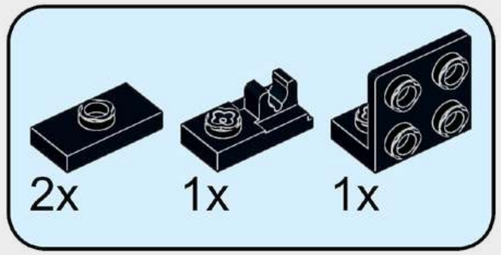

72

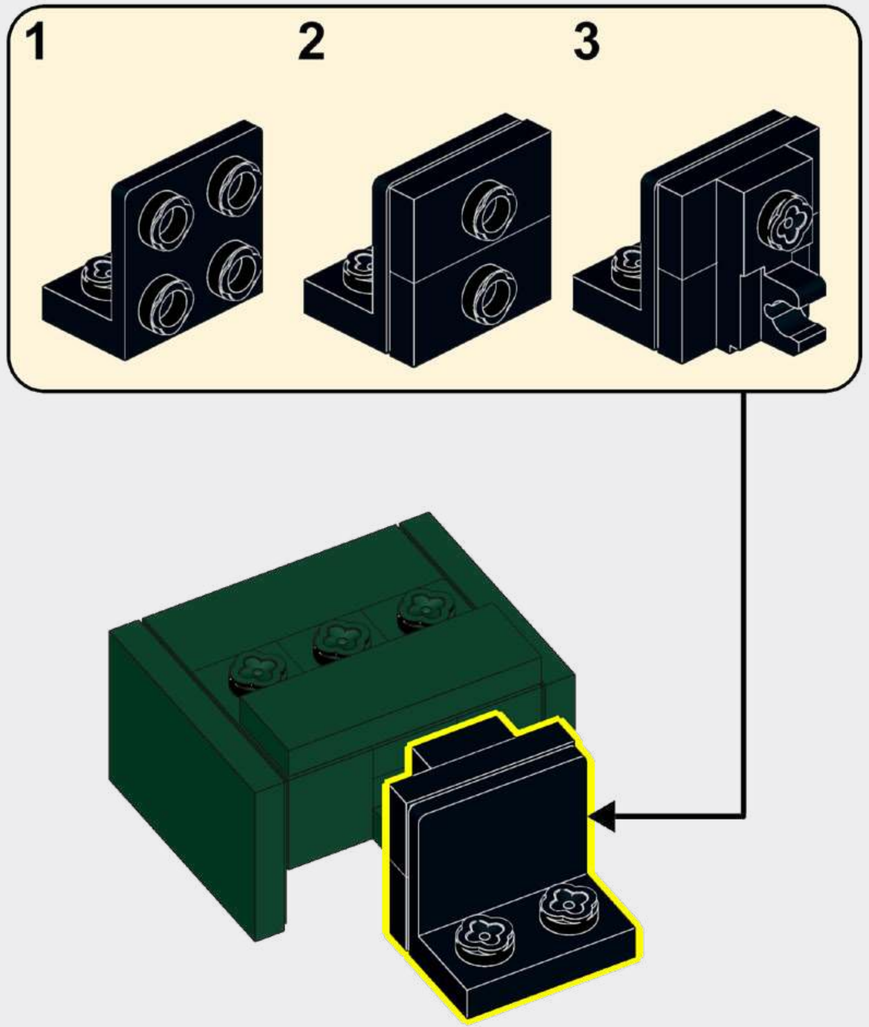

73

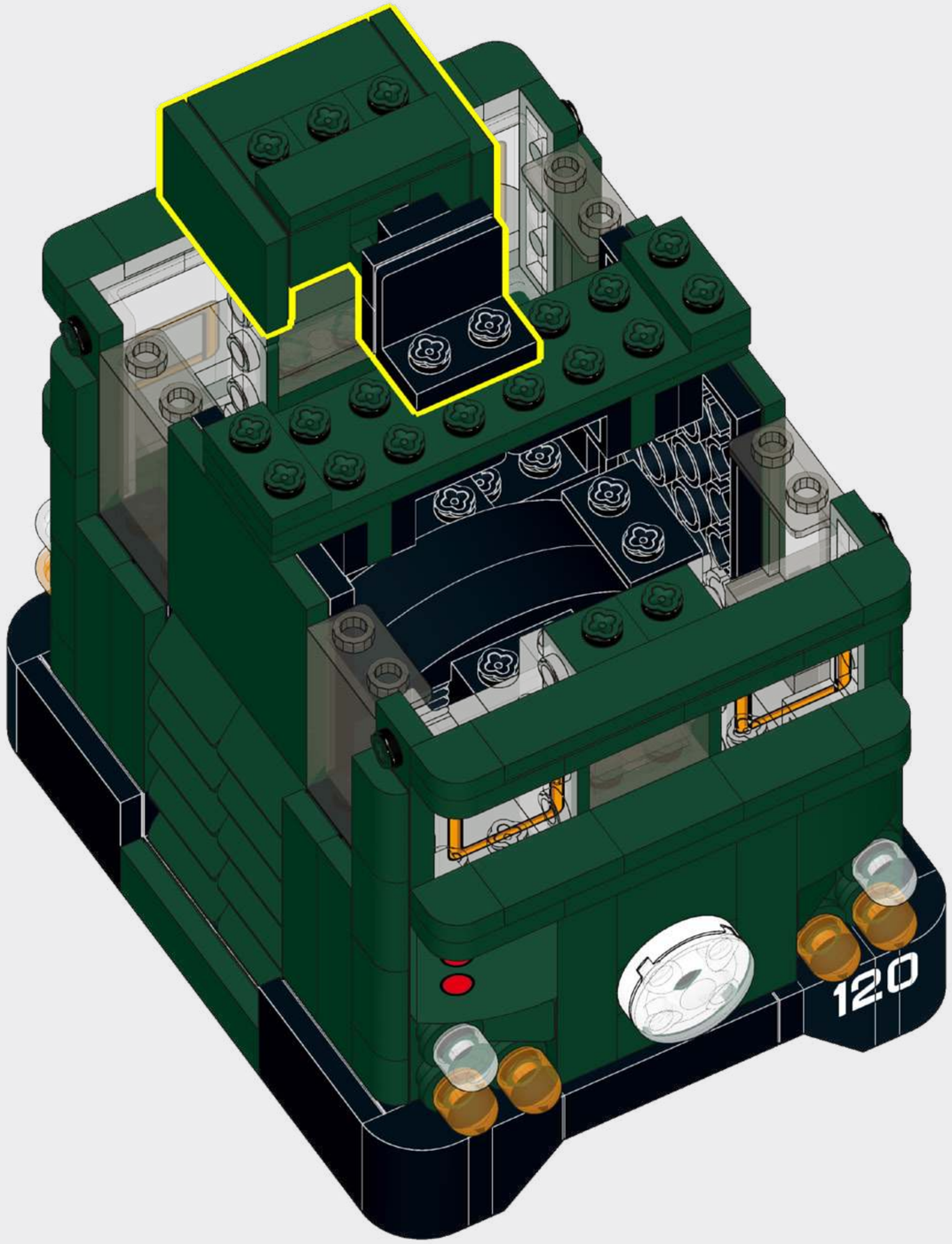

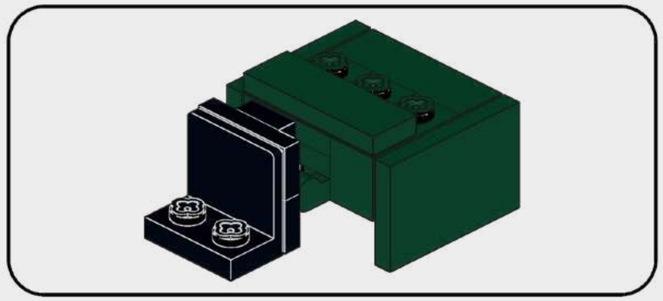

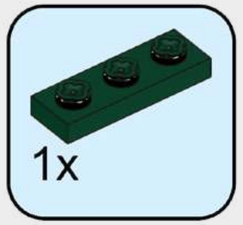

74

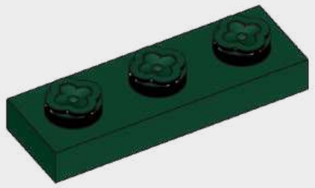

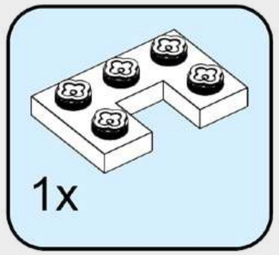

75

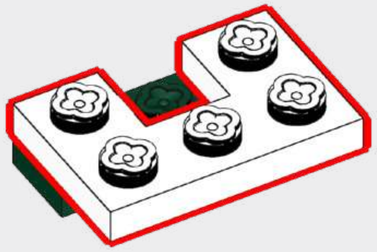

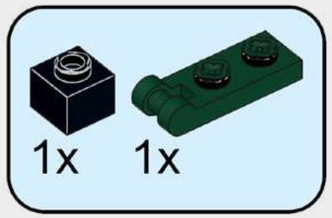

76

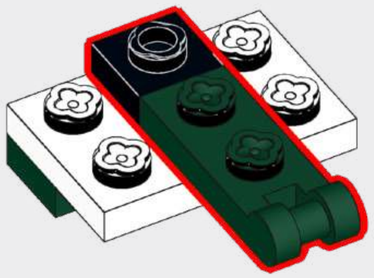

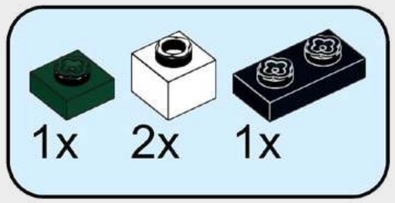

77

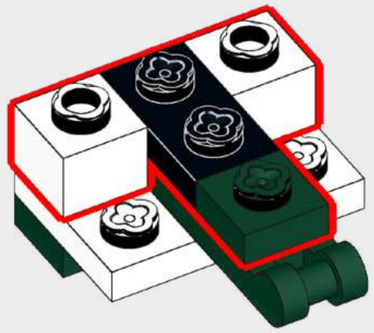

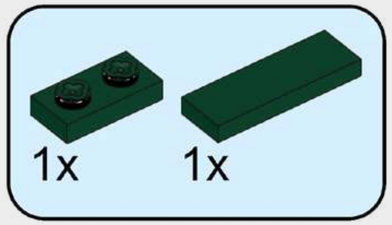

78

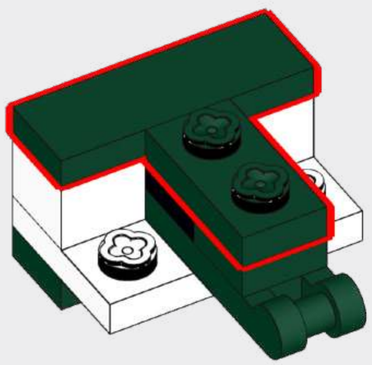

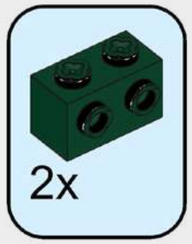

79

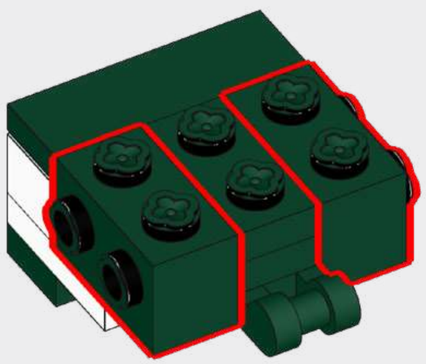

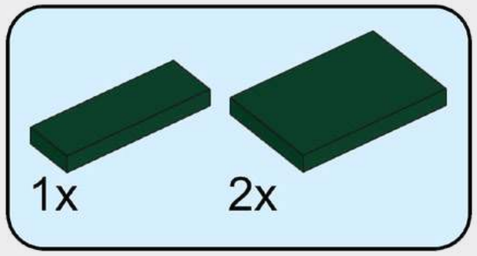

80

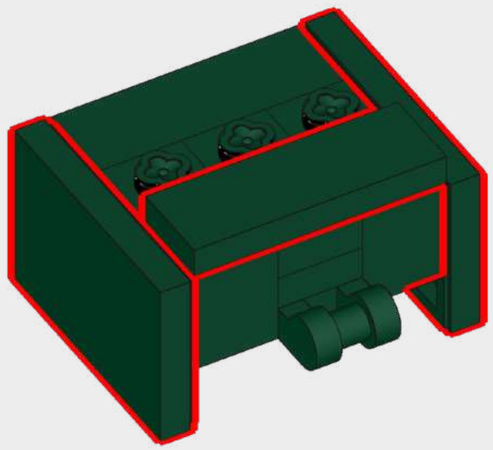

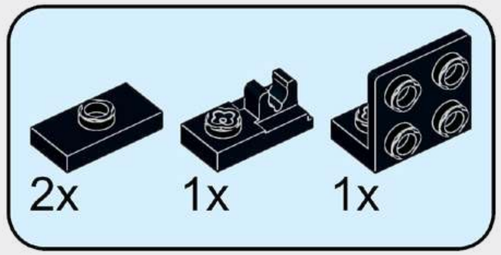

81

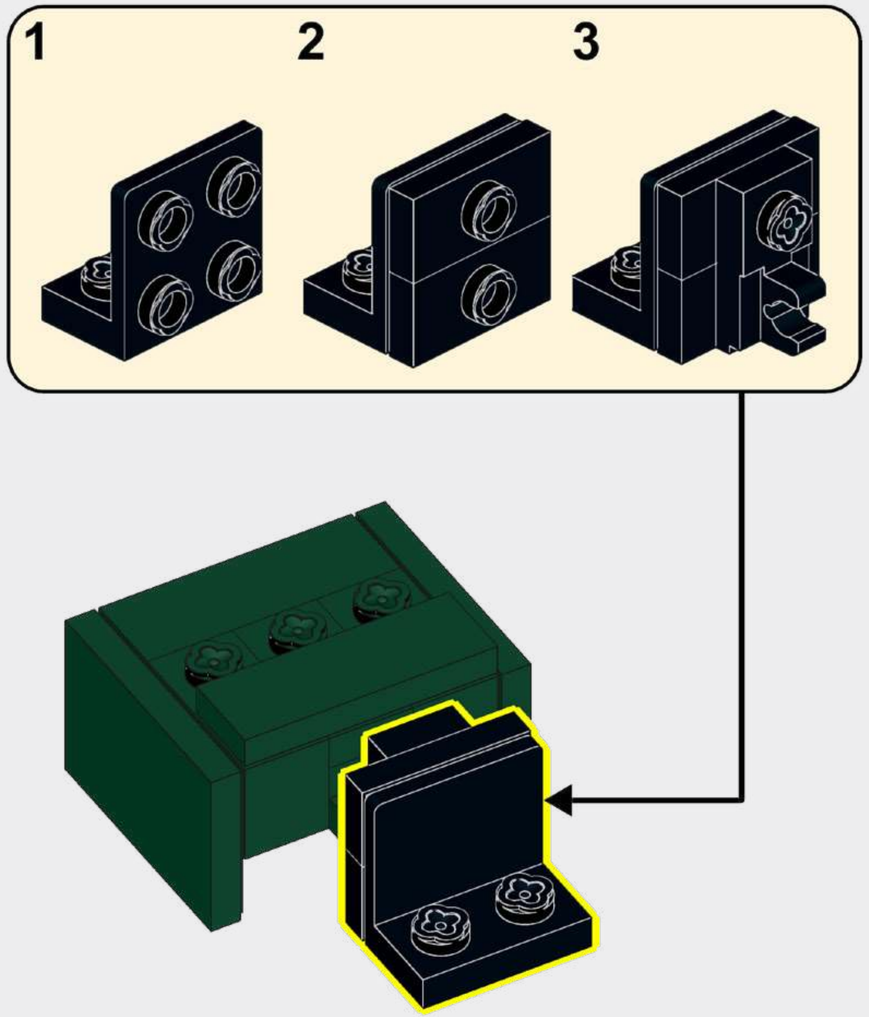

82

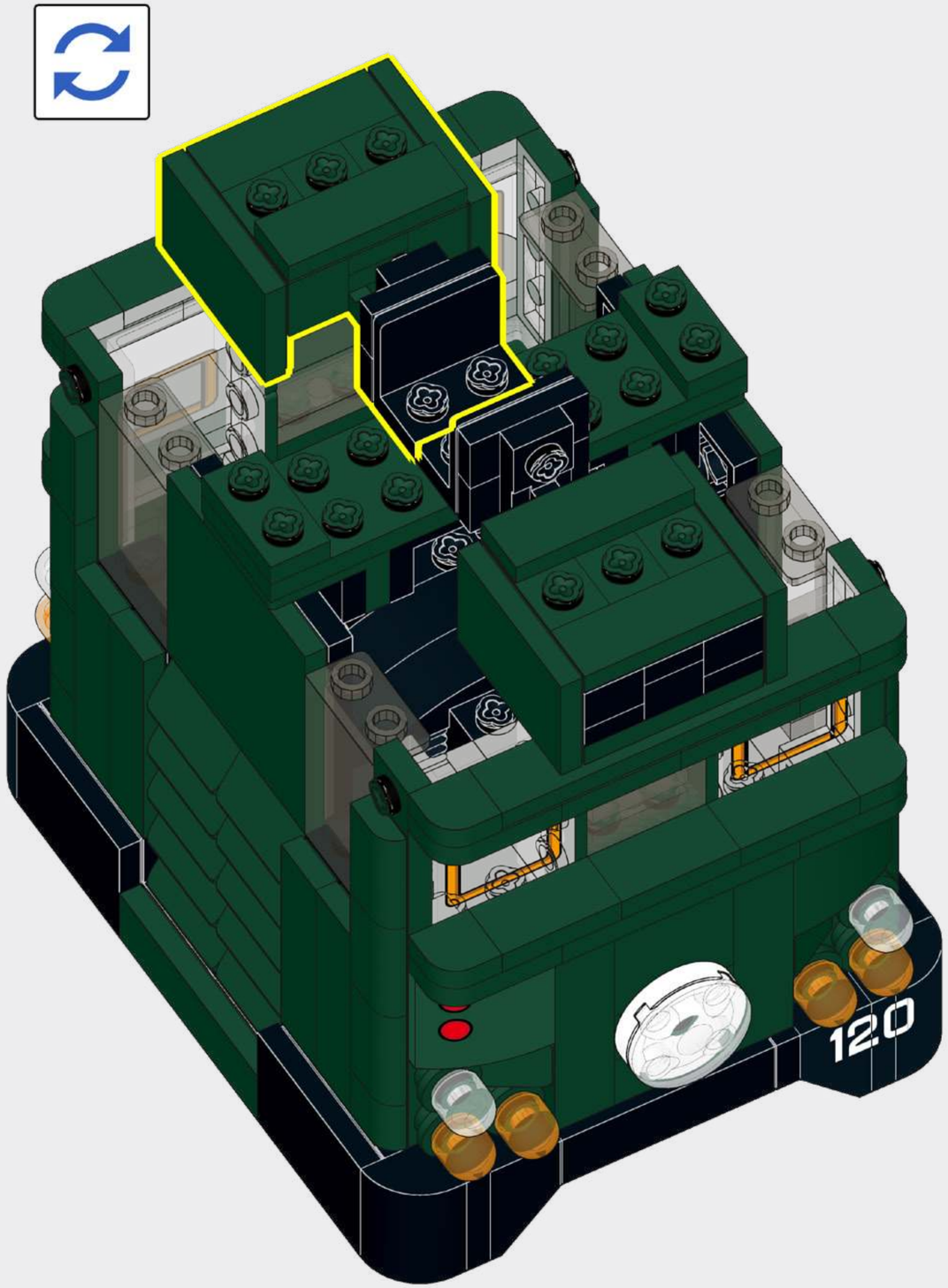

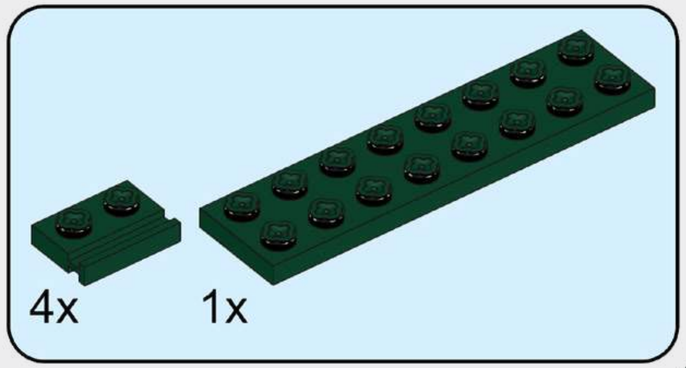

83

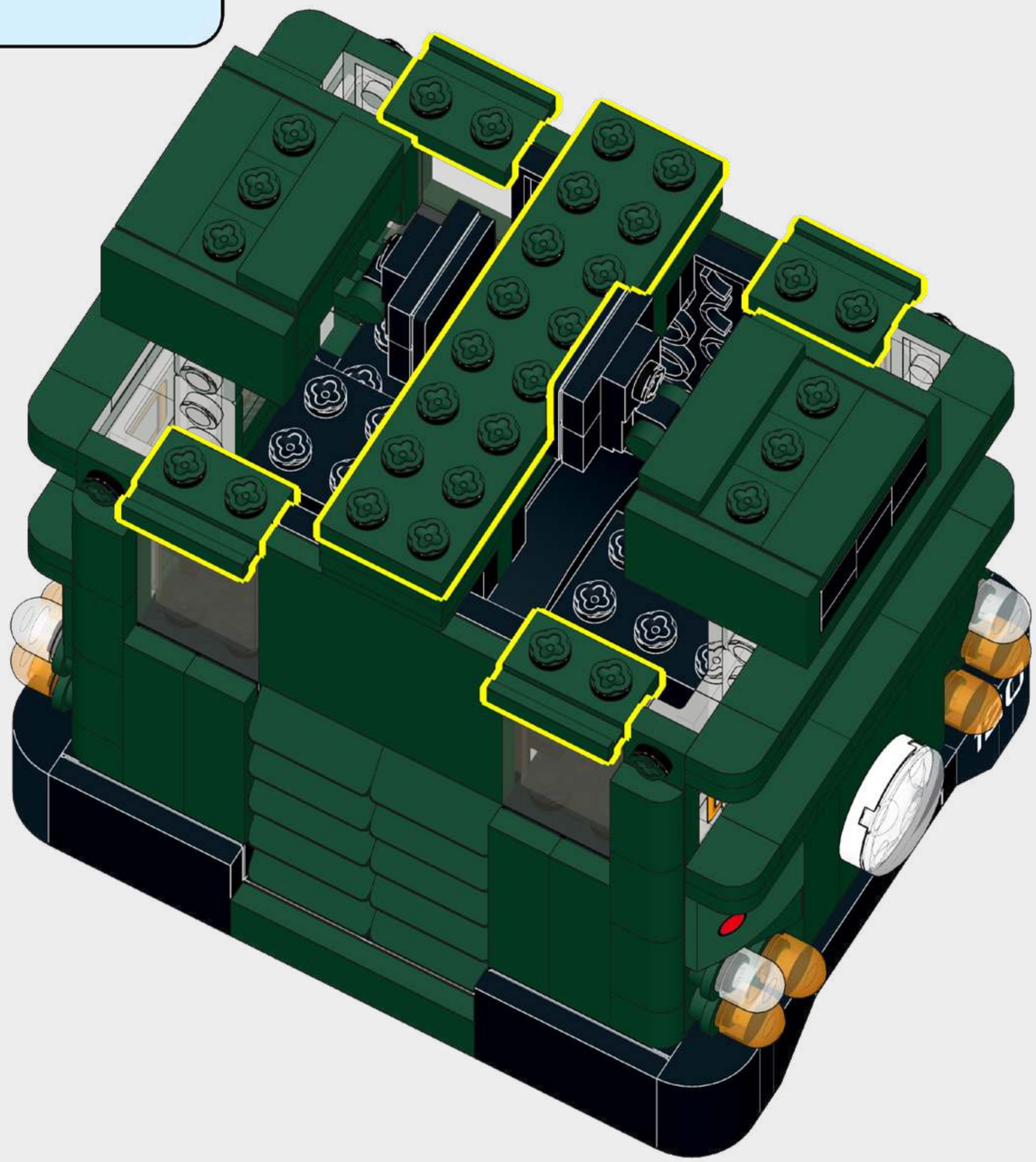

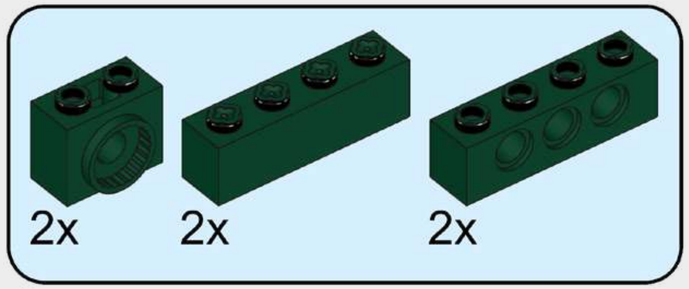

84

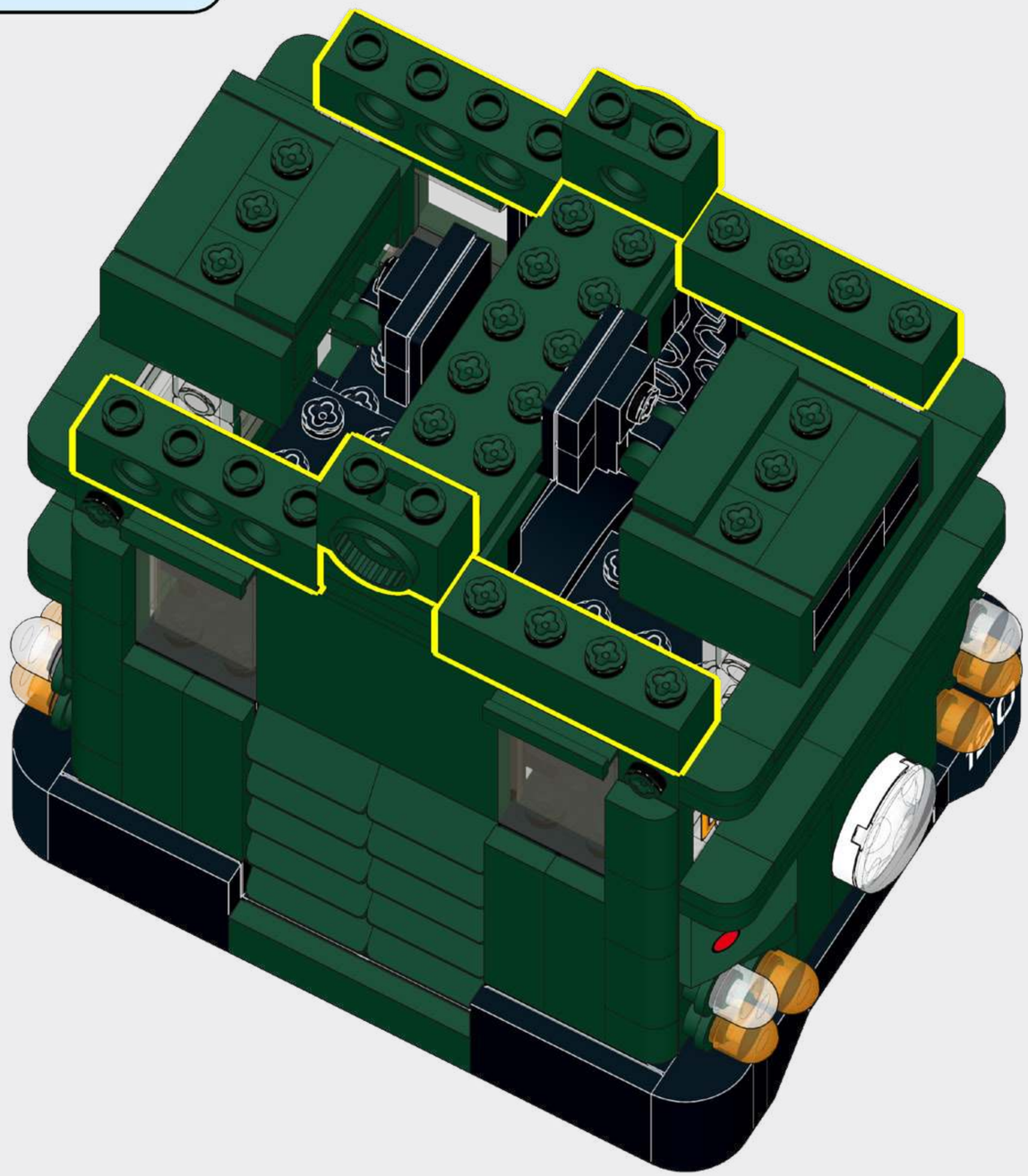

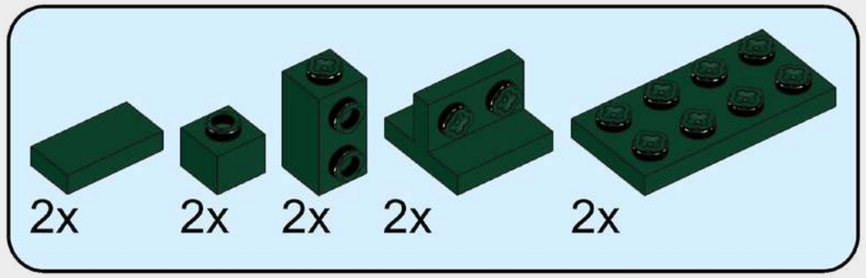

85

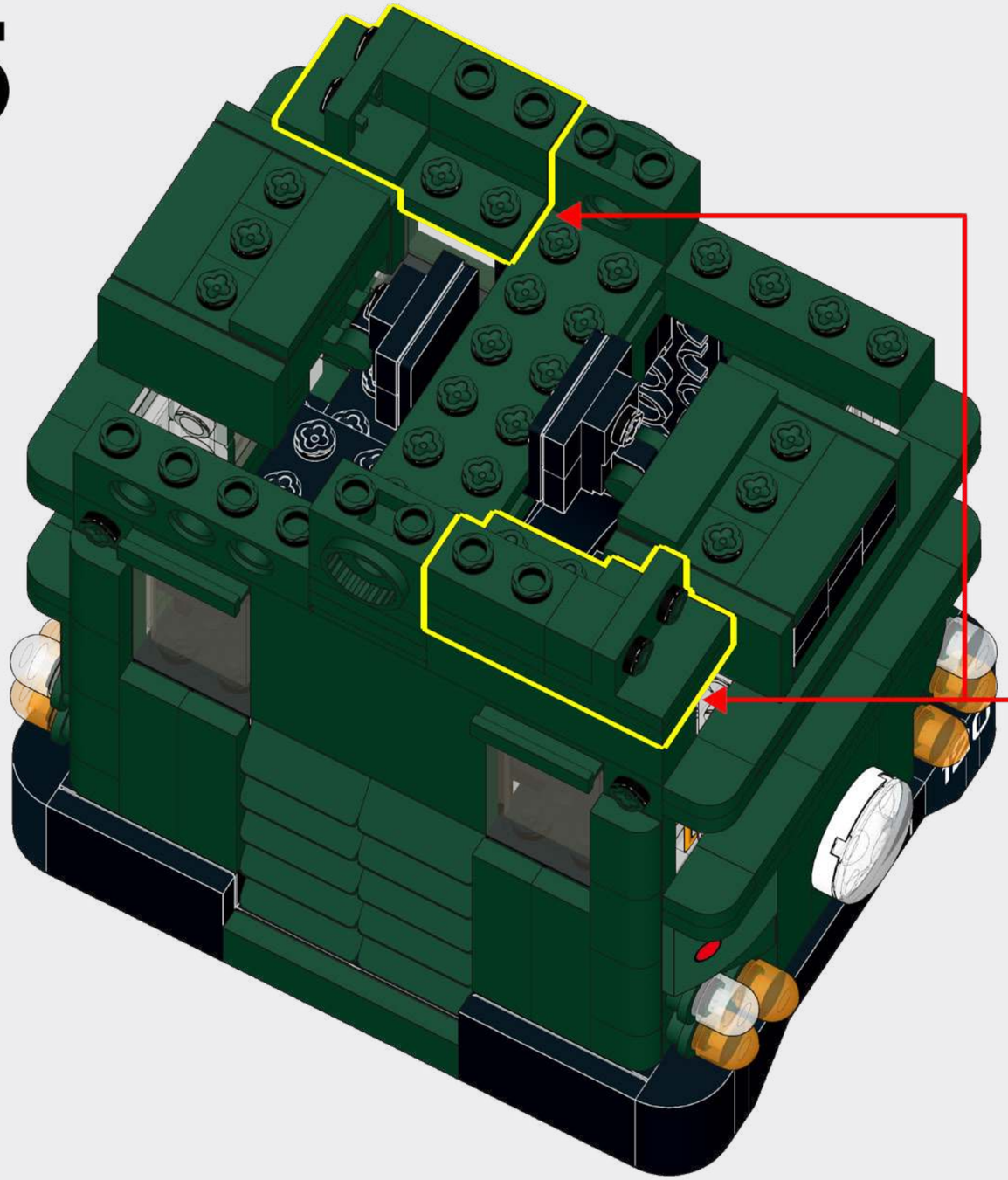

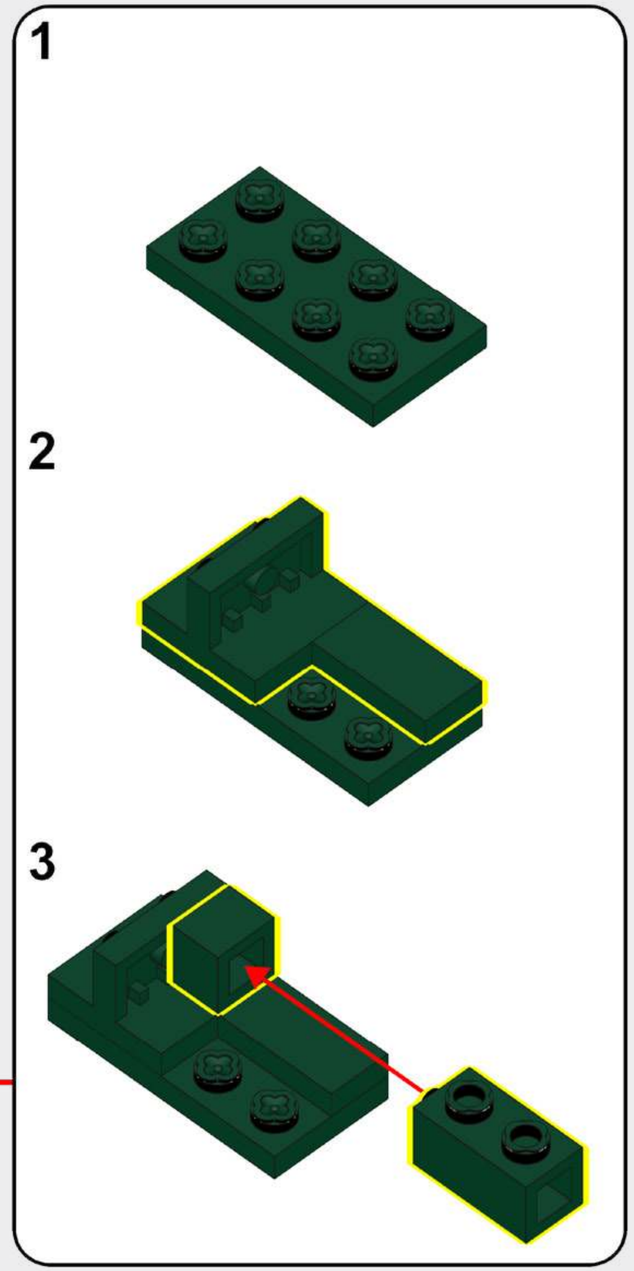

2x

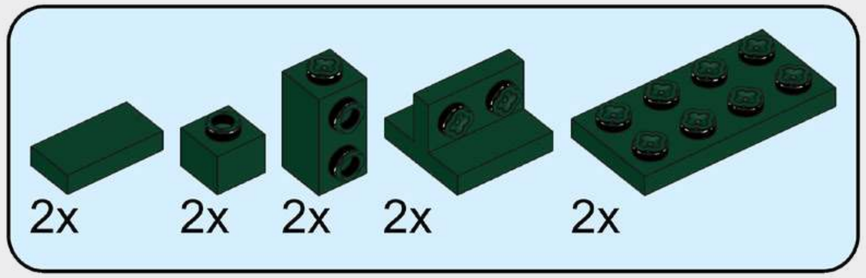

86

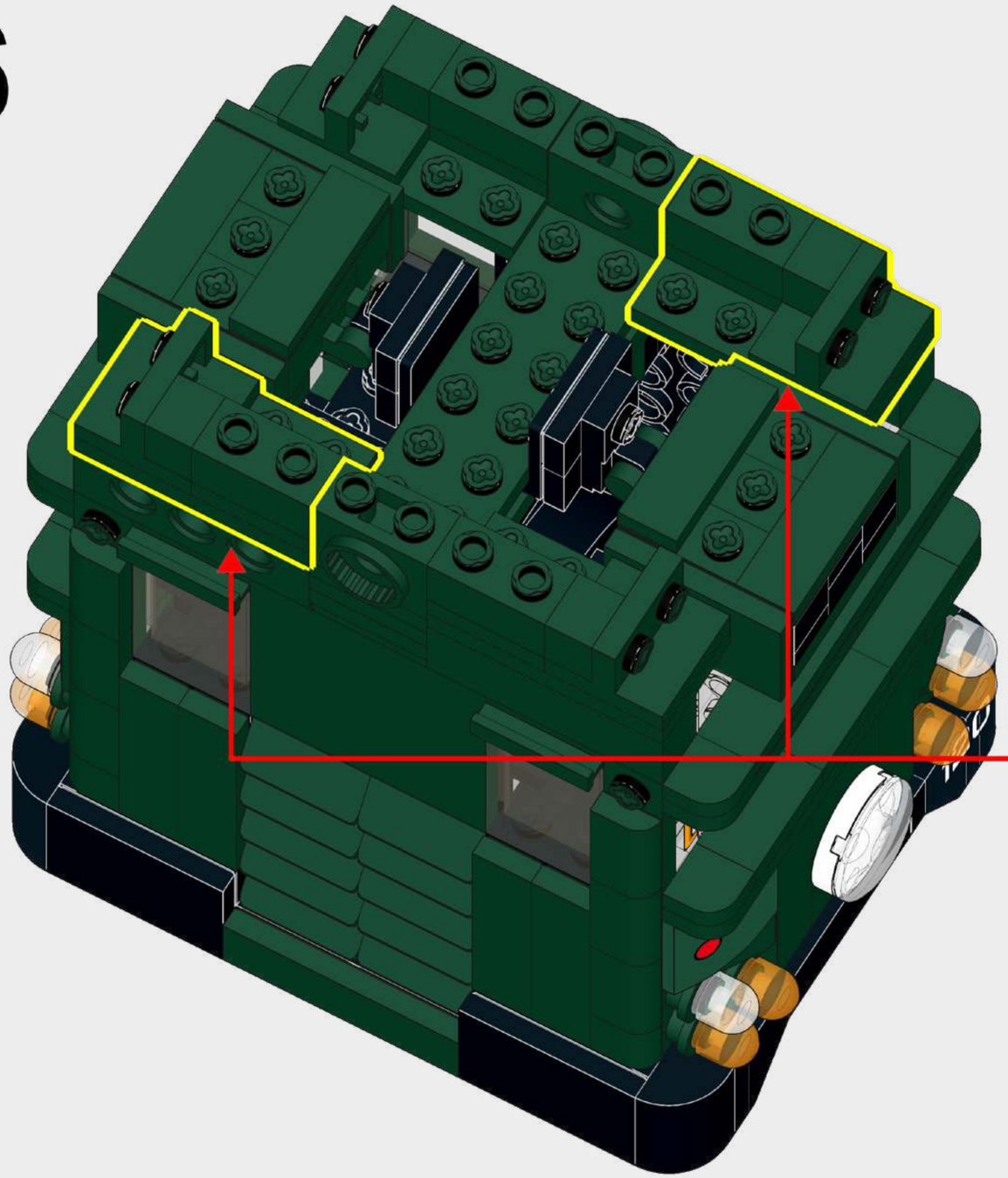

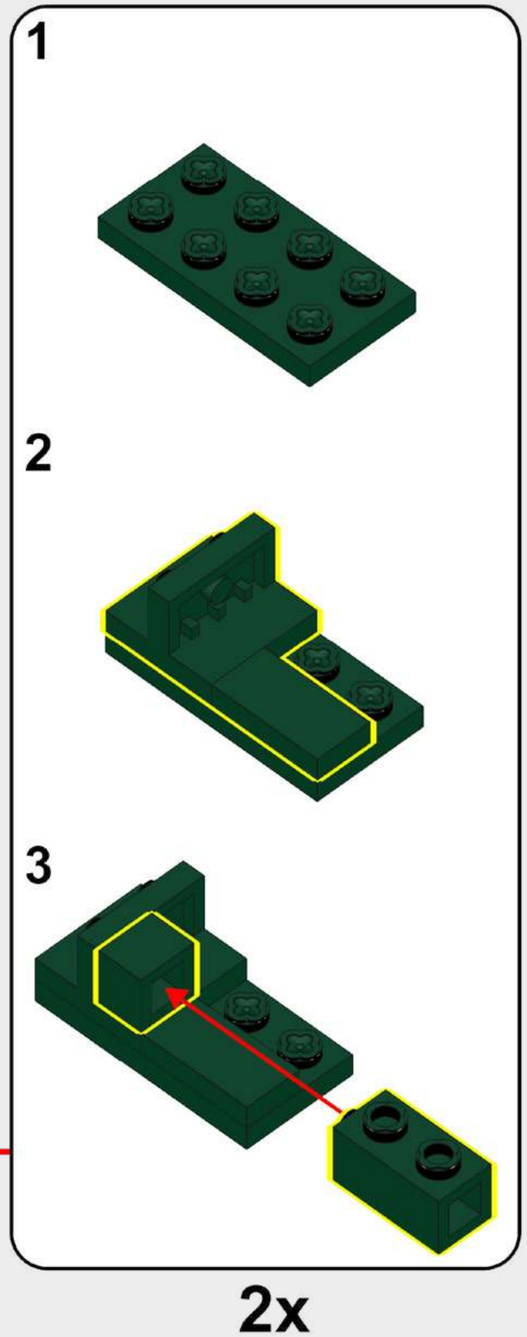

2x

87

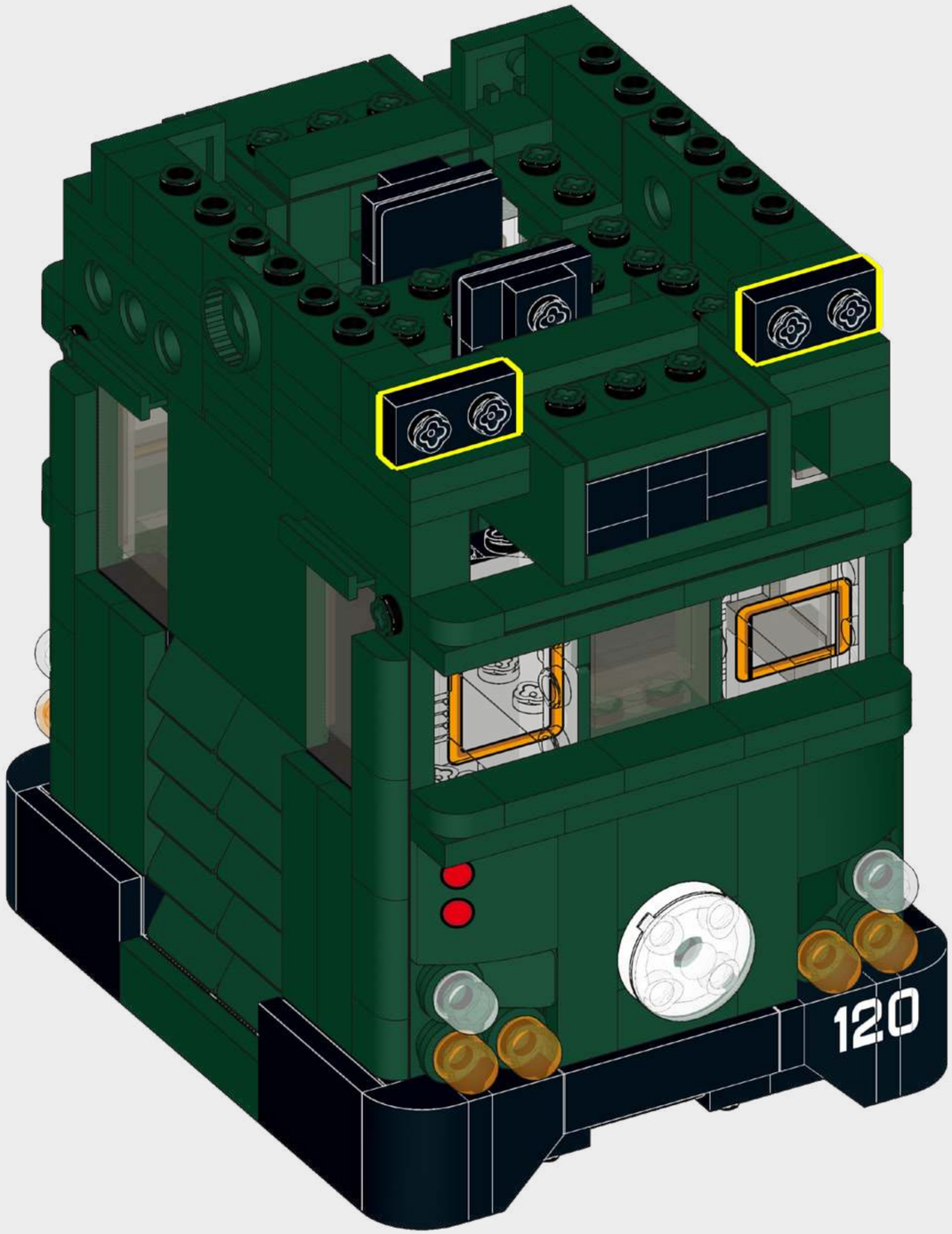

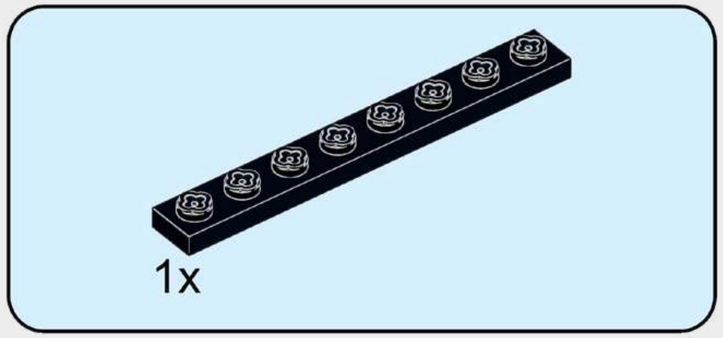

88

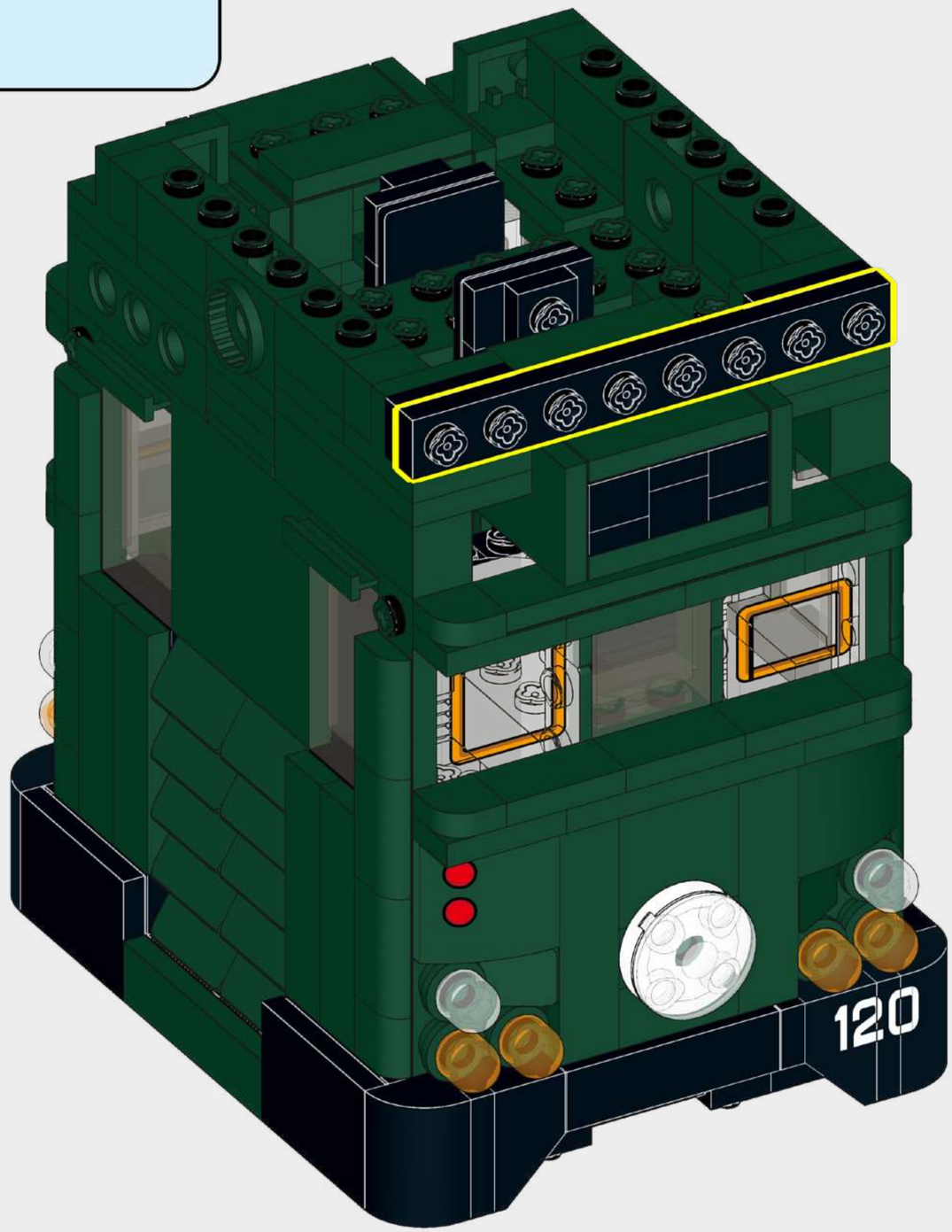

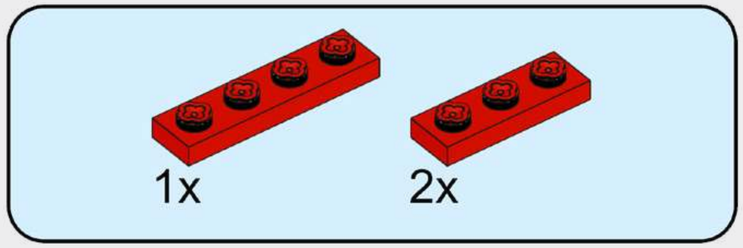

89

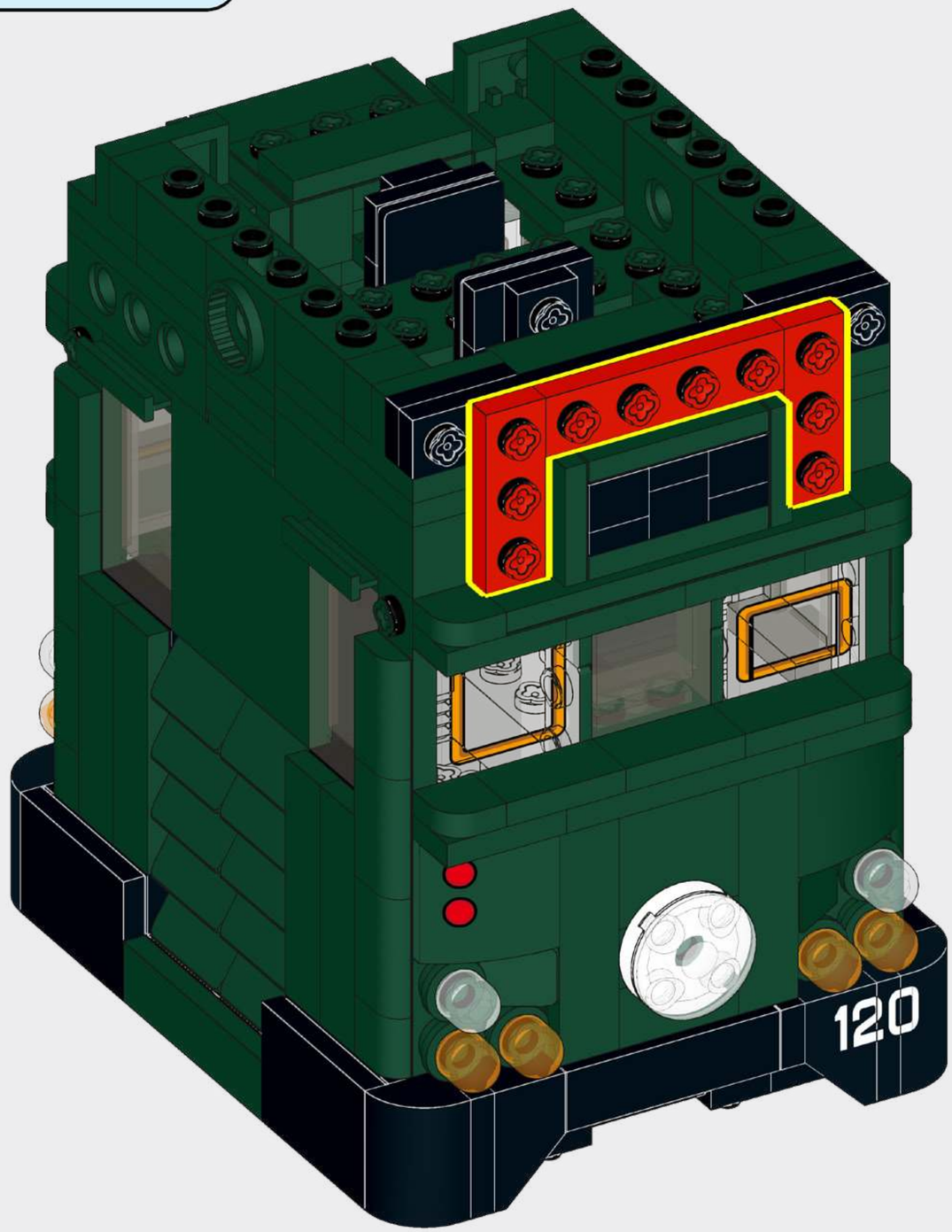

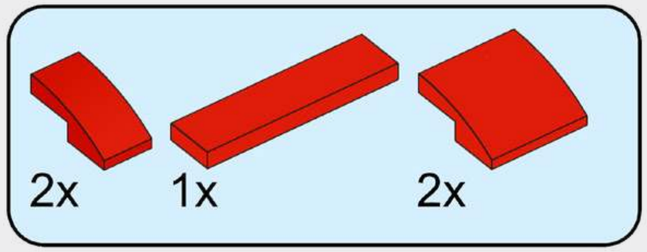

90

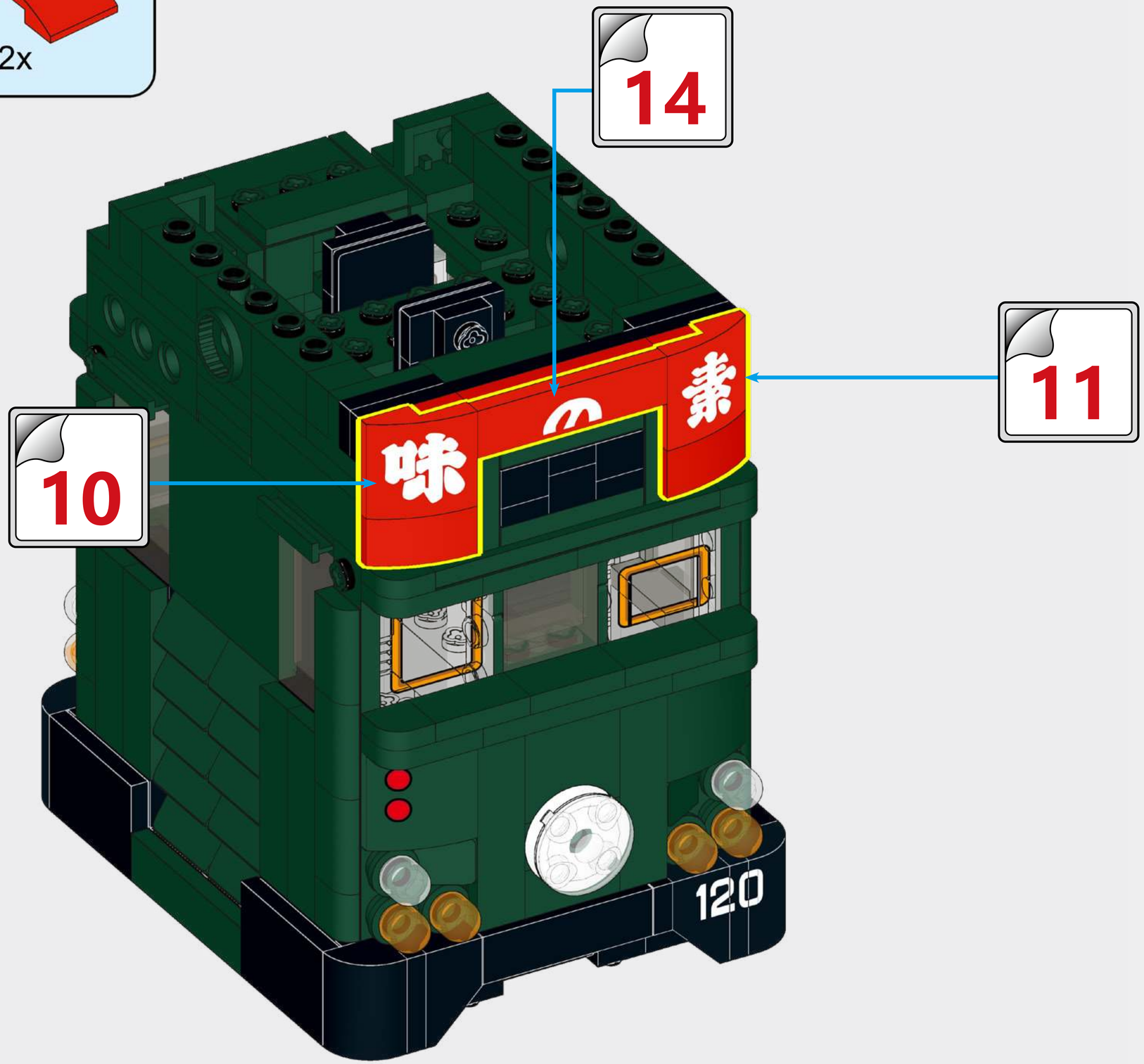

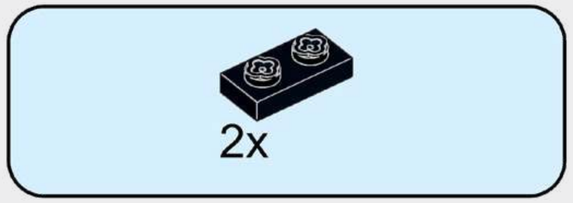

91

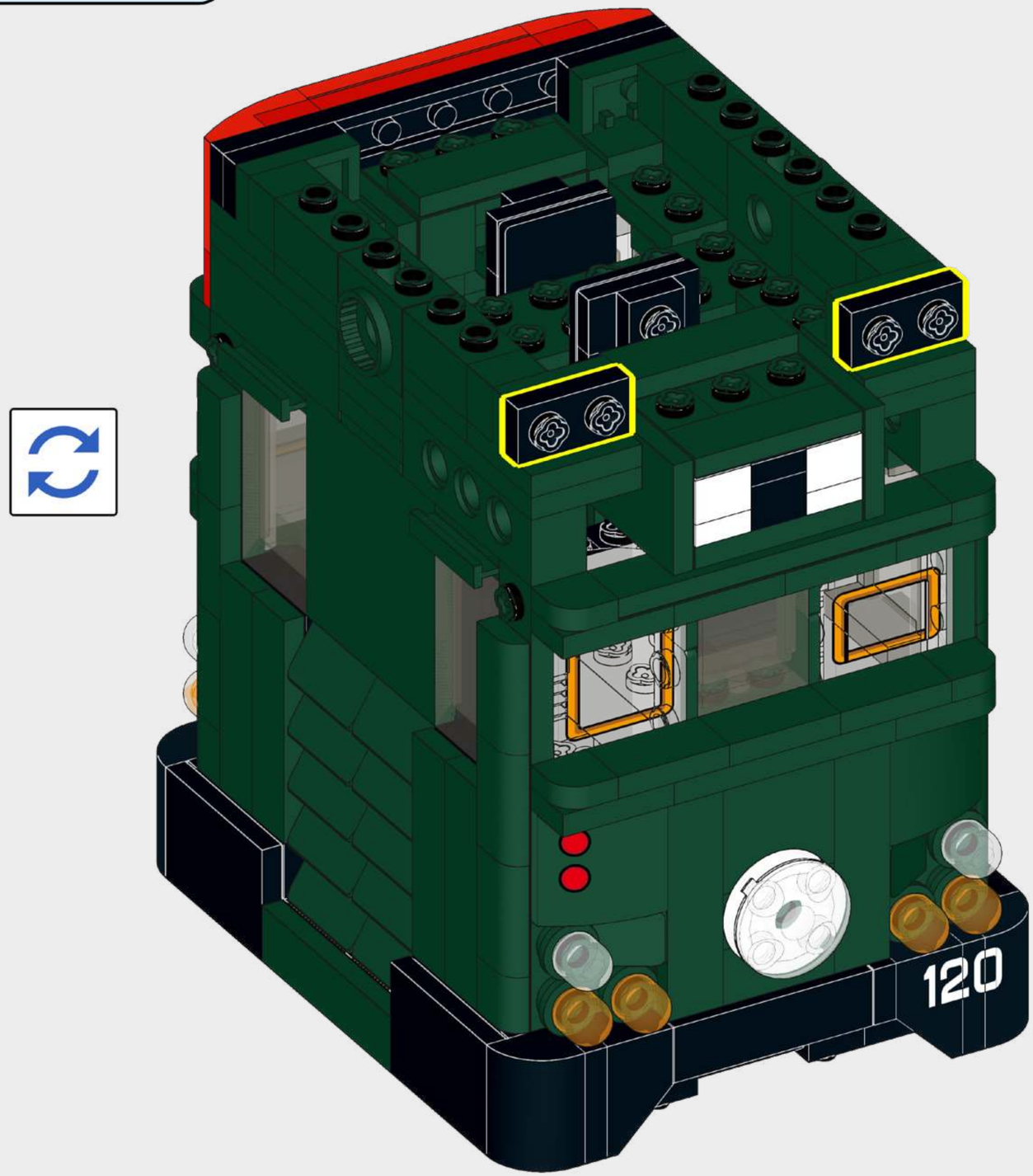

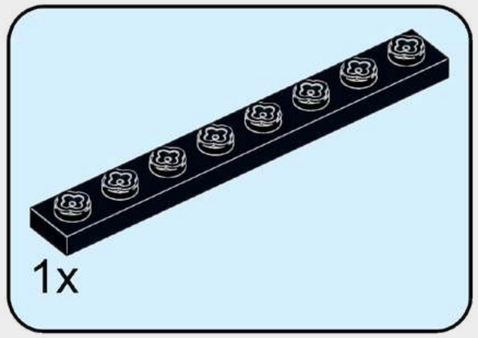

92

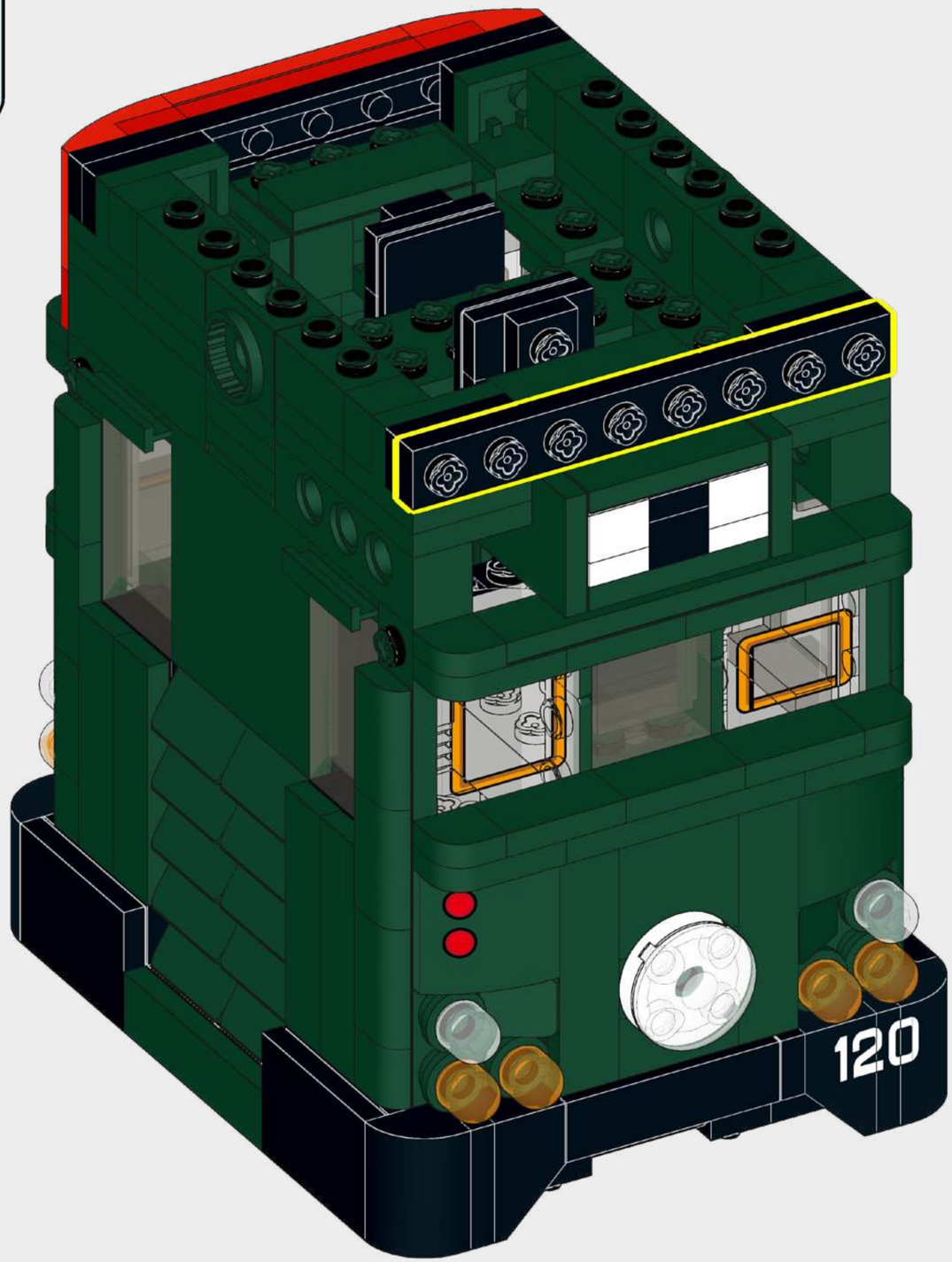

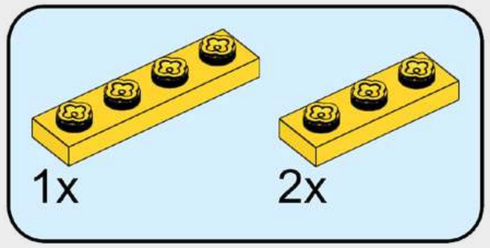

93

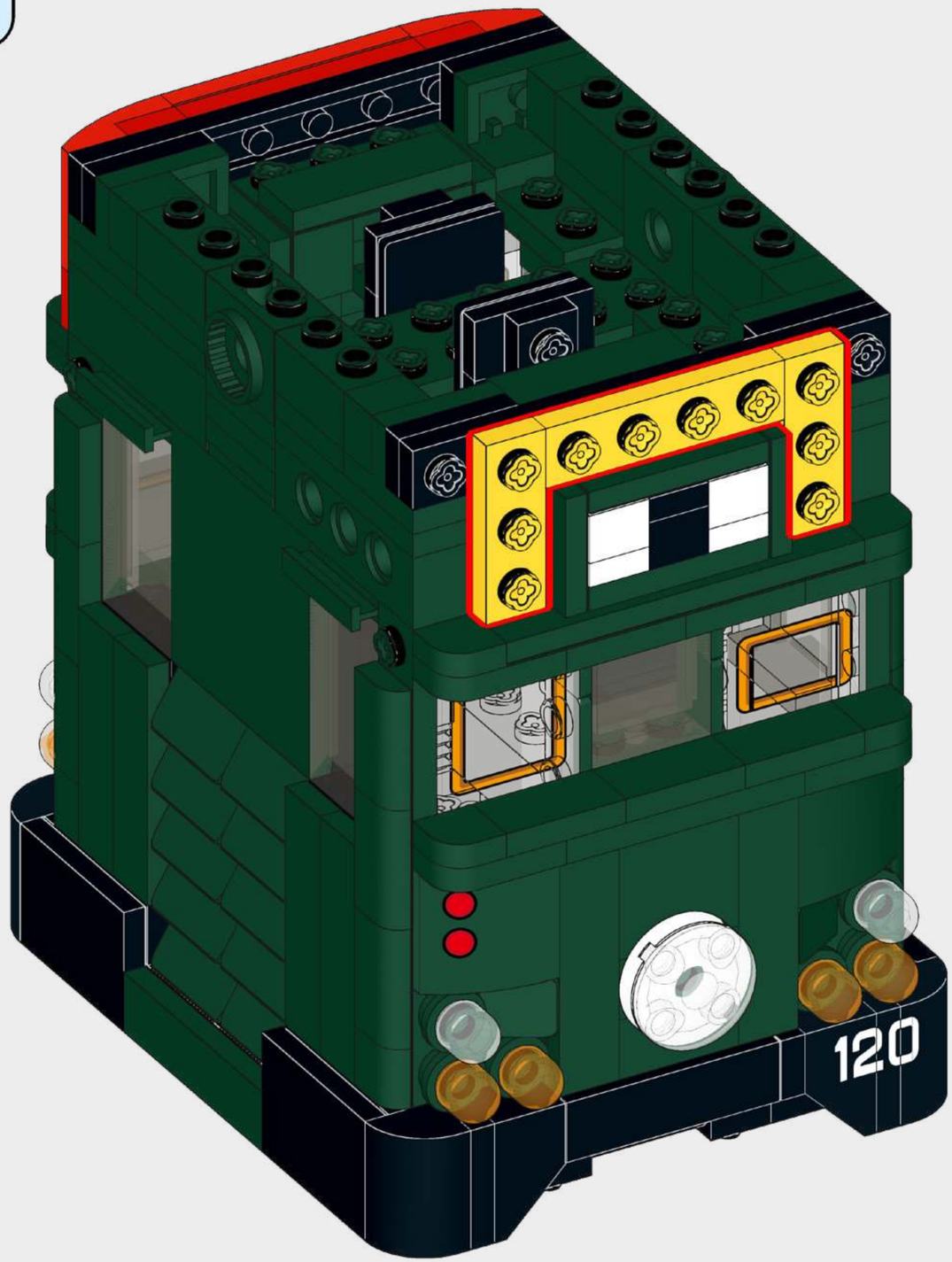

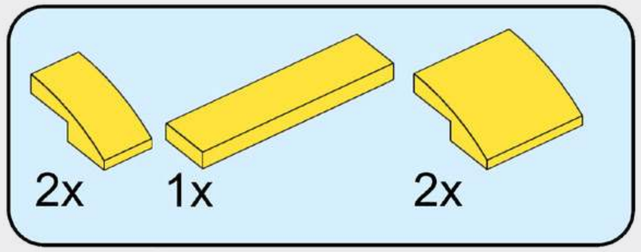

94

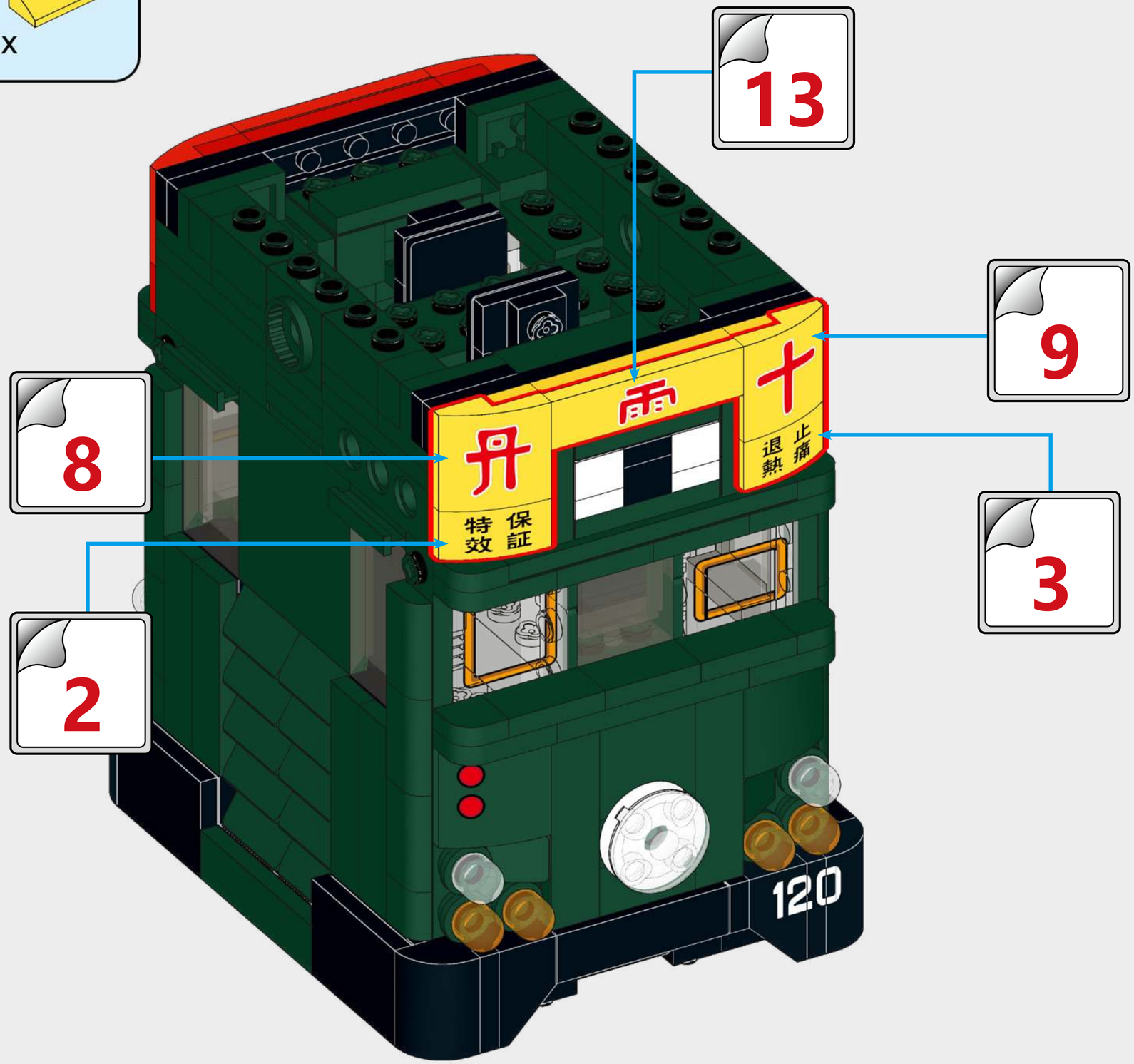

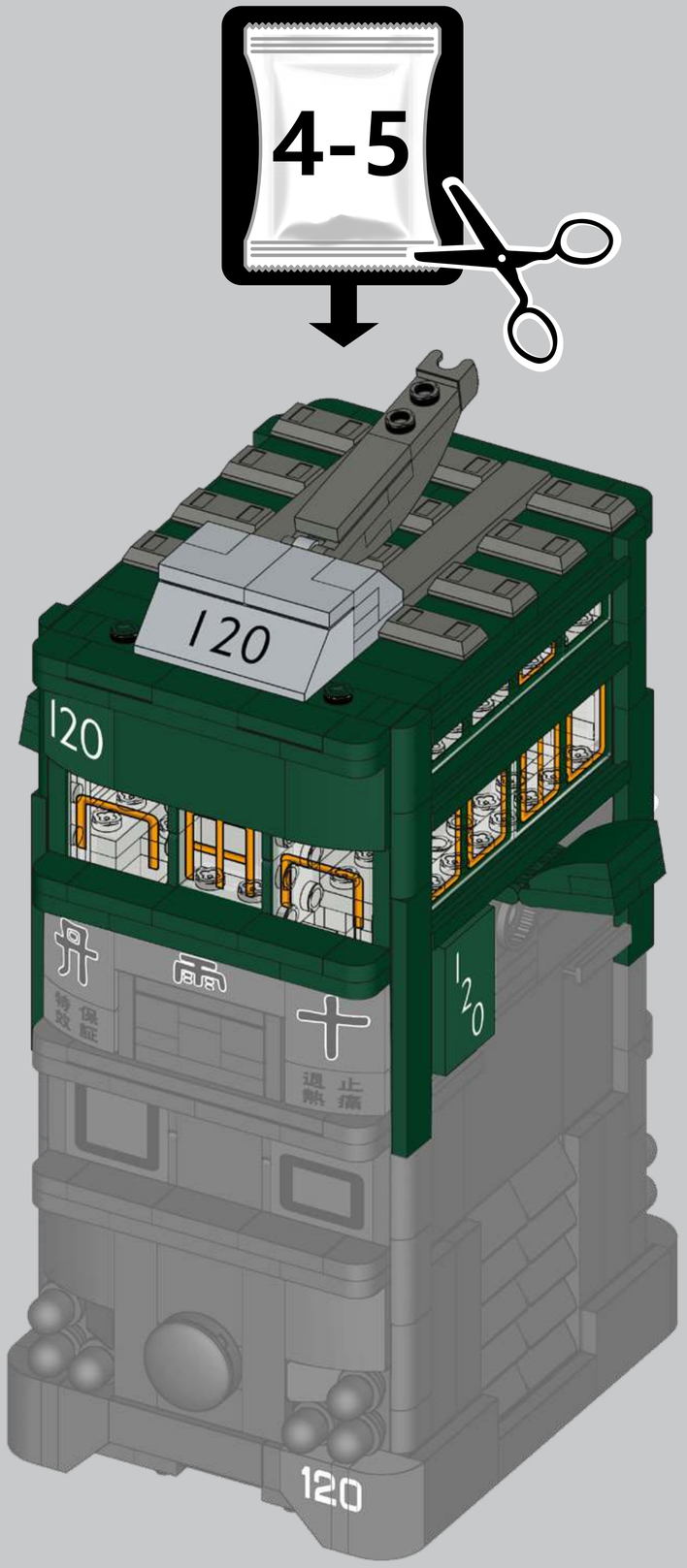
4-5
120
120
120
120

2x

95

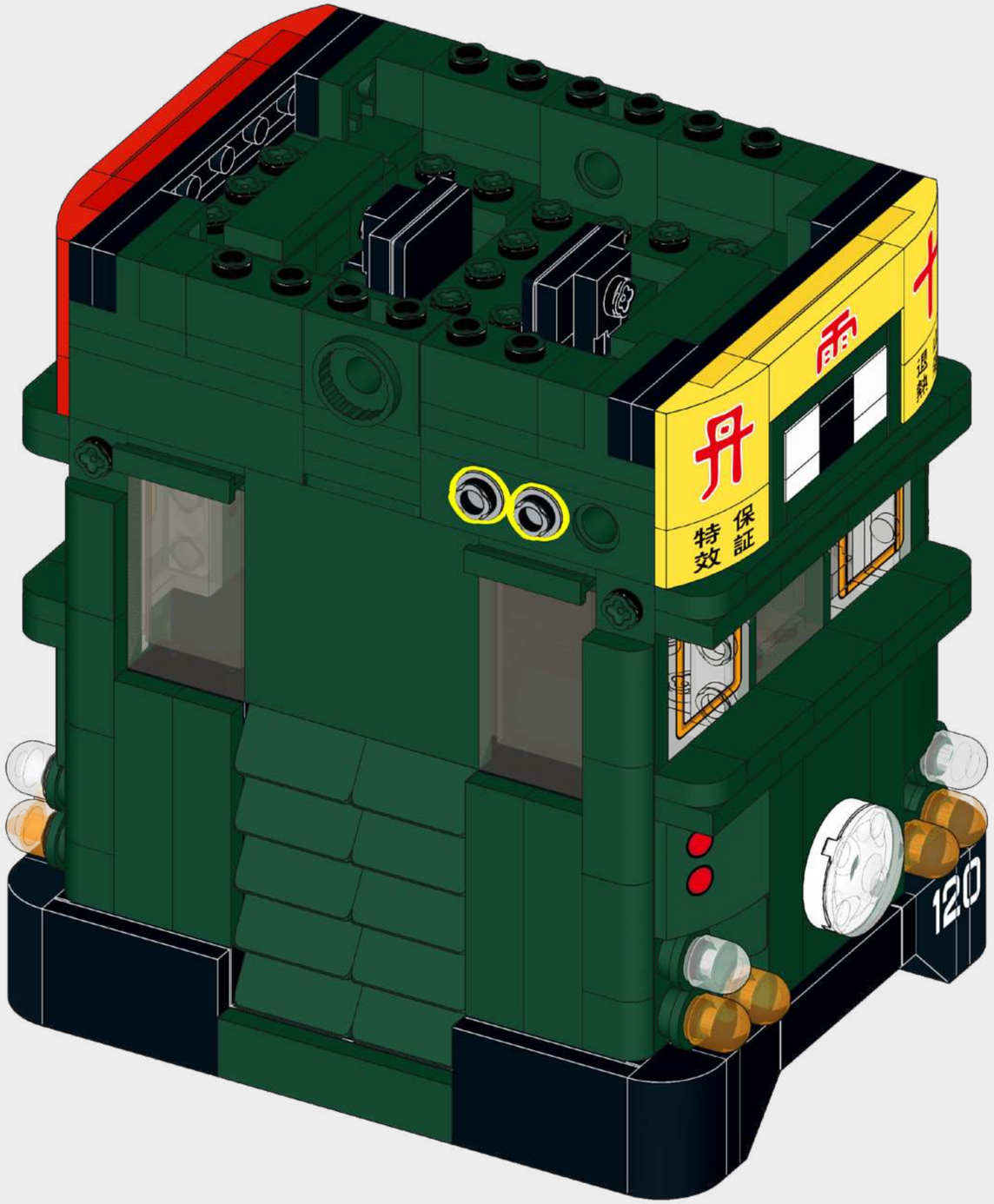

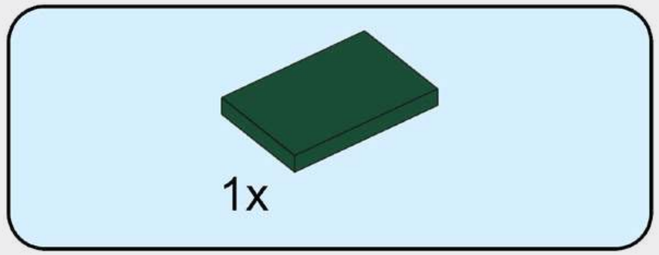

96

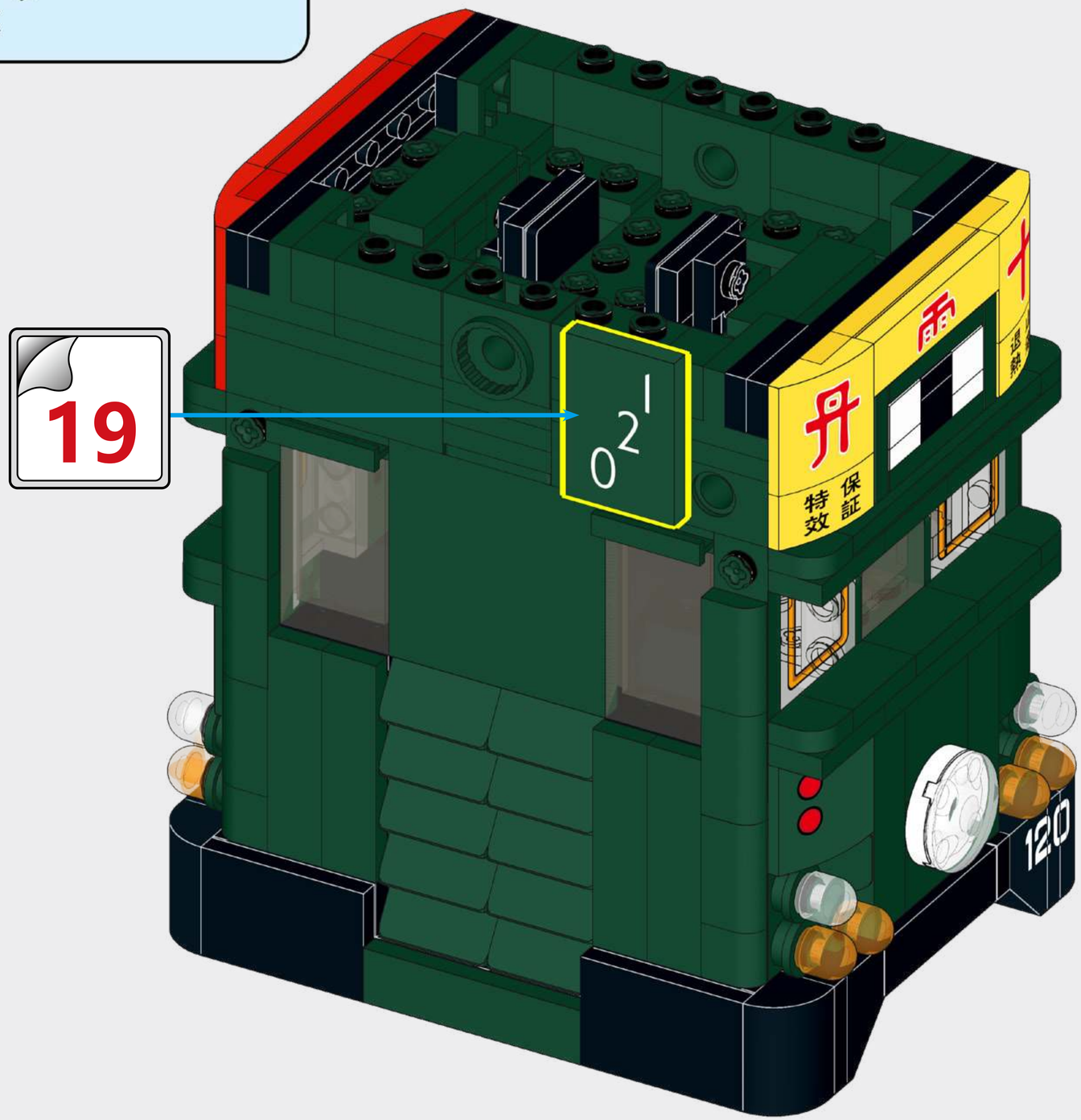

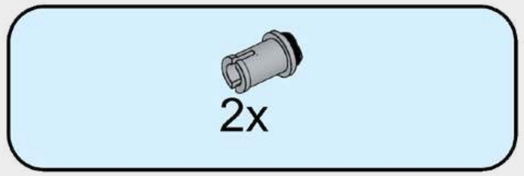

97

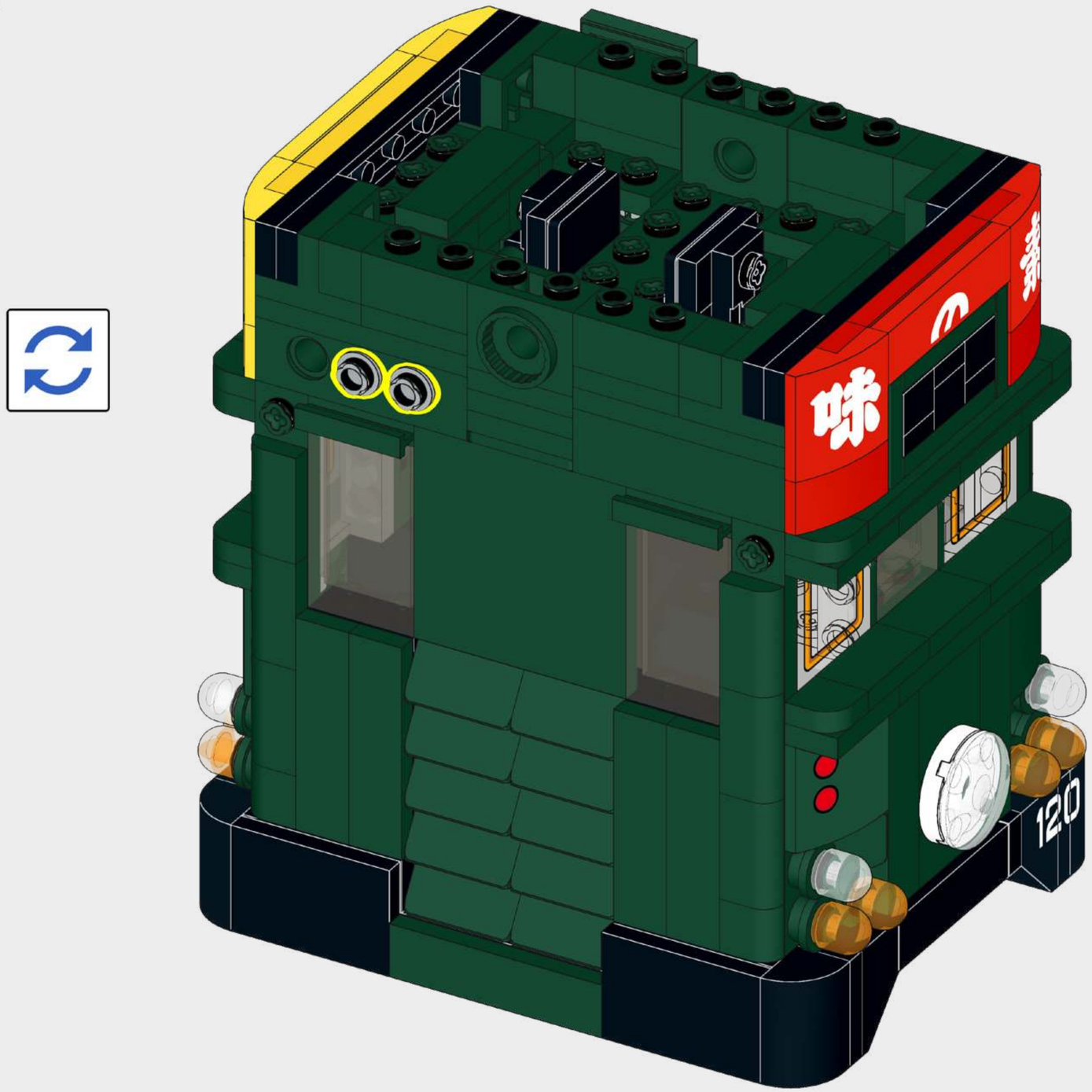

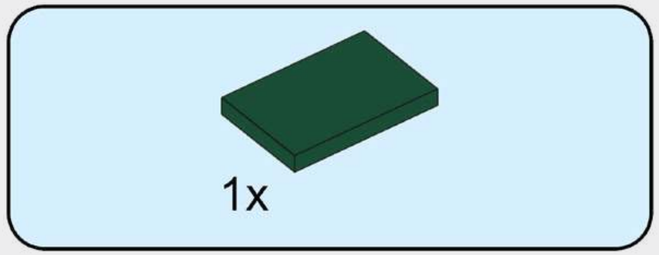

98

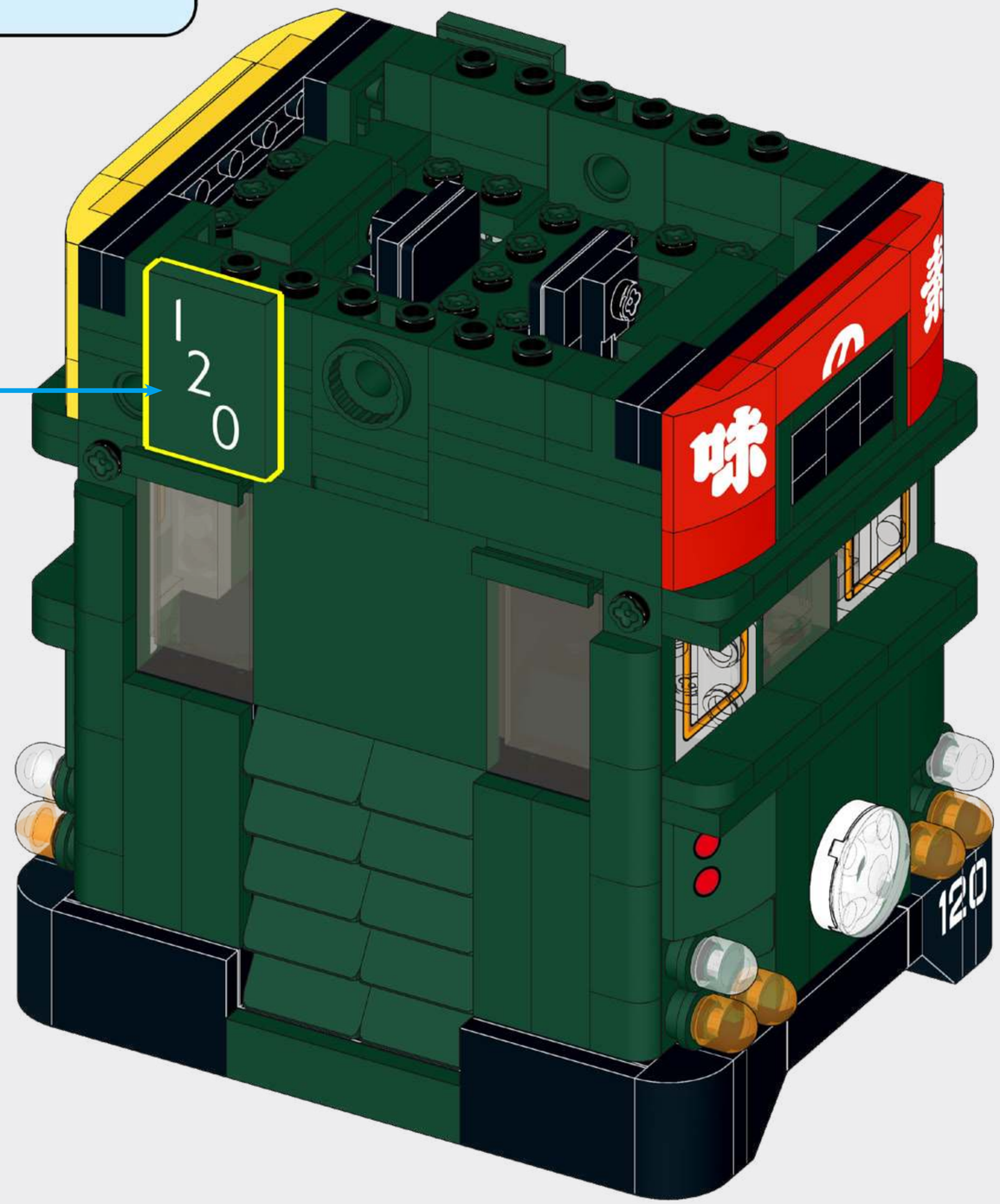

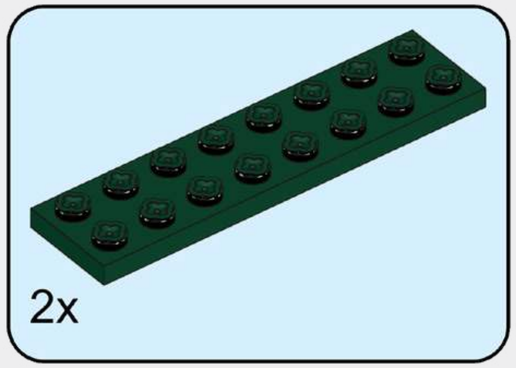

99

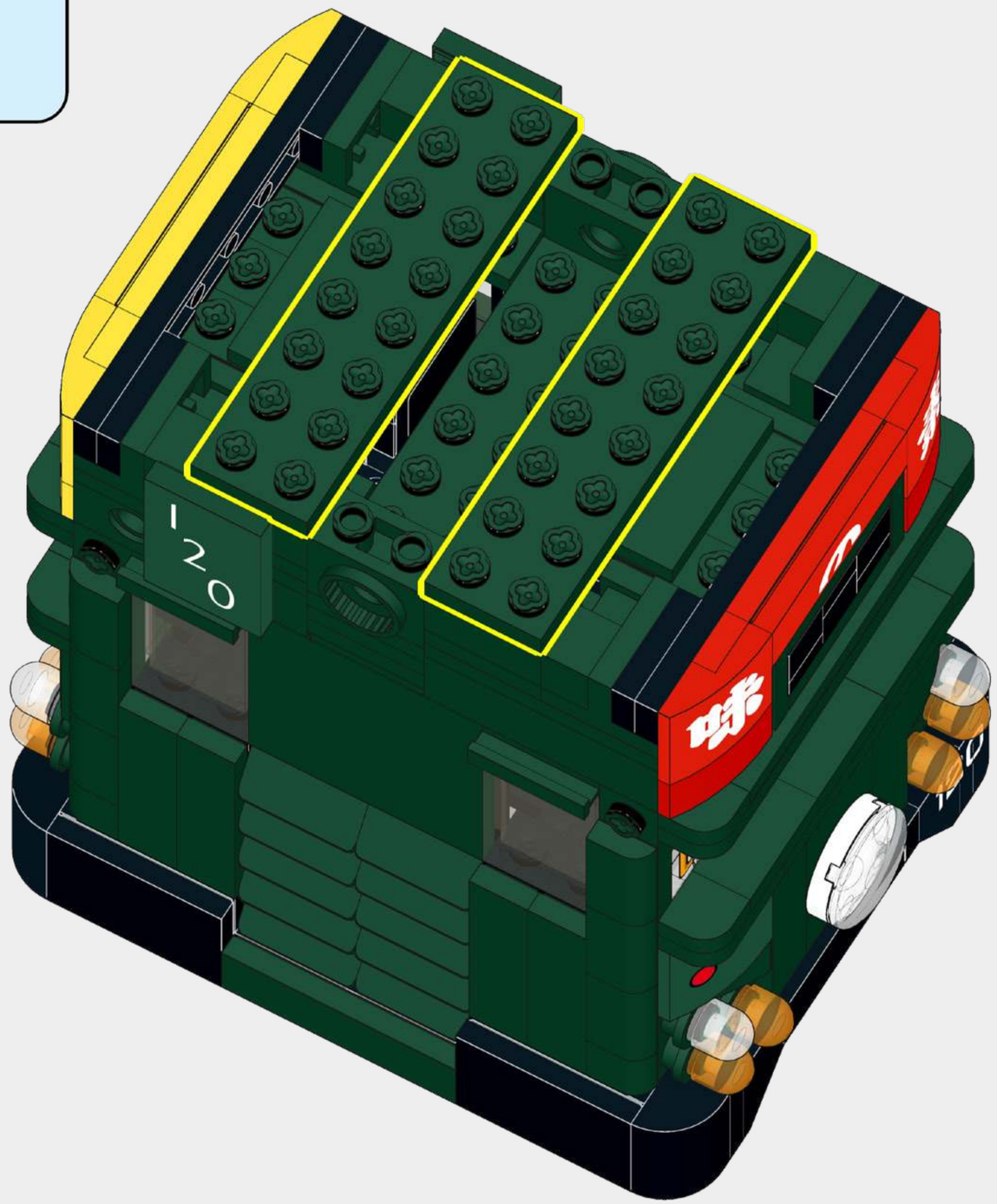

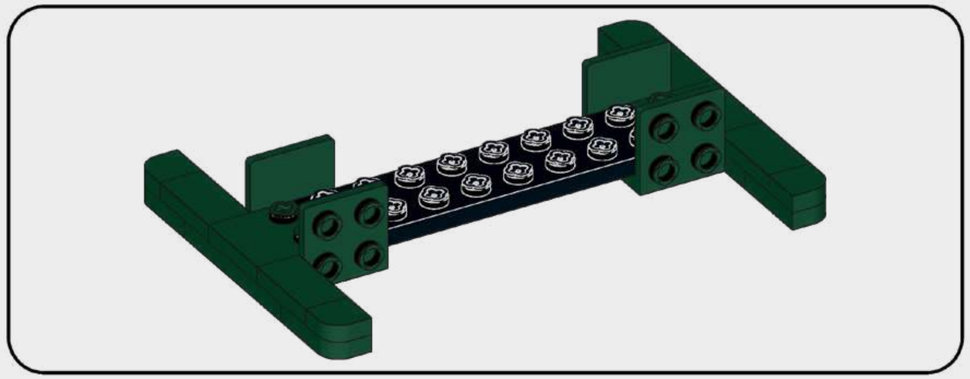

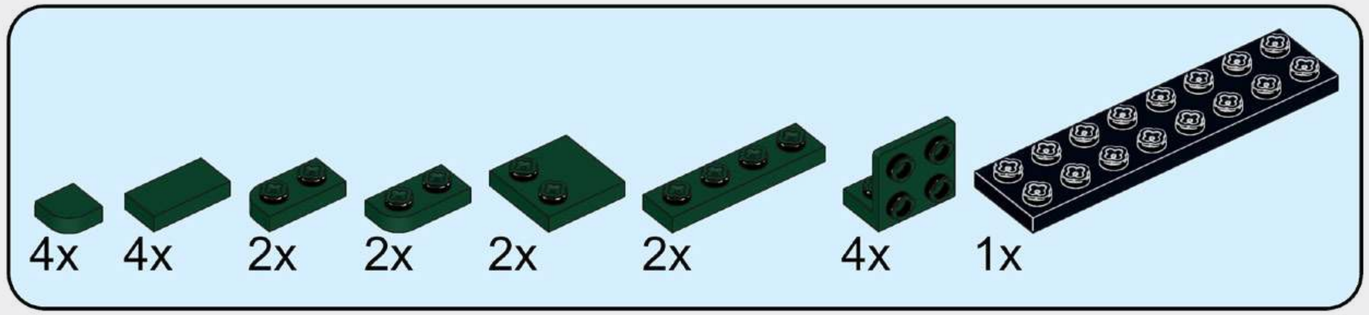

100

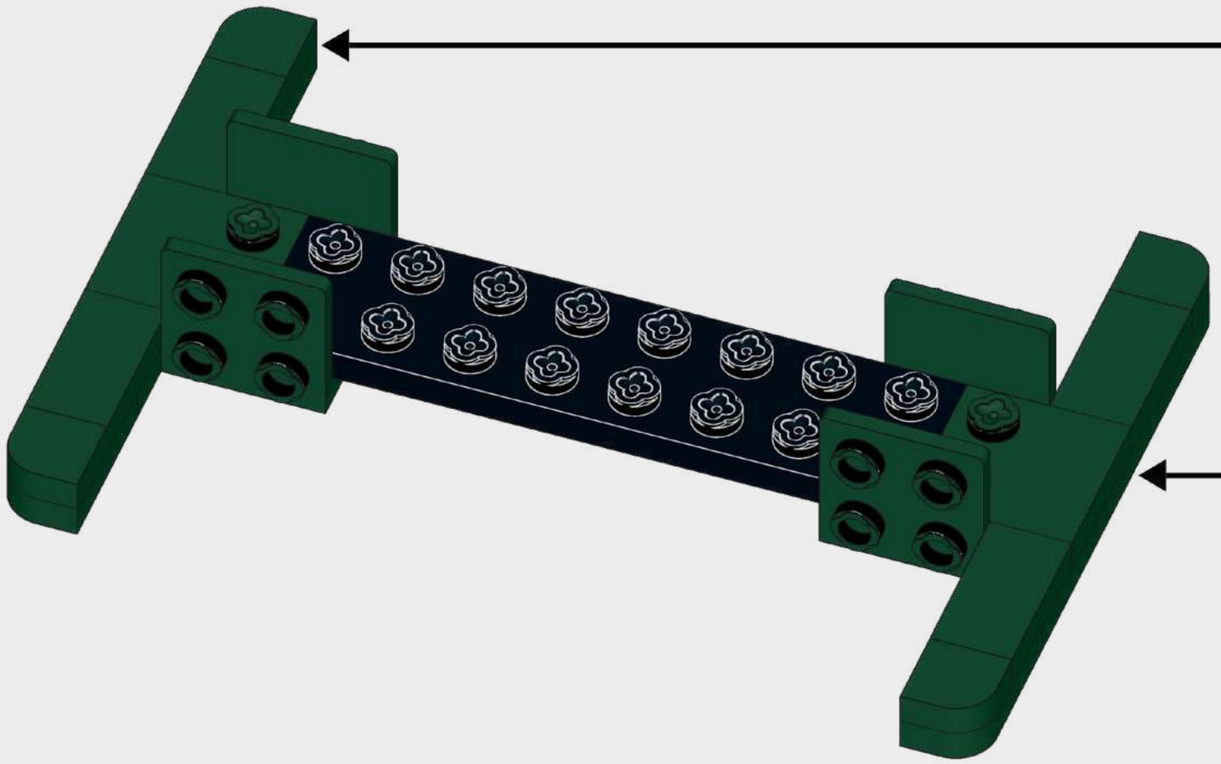

2x

1

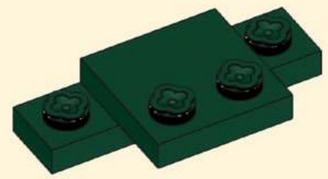

2

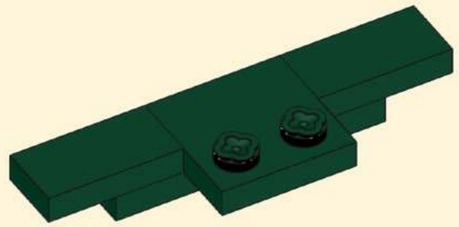

3

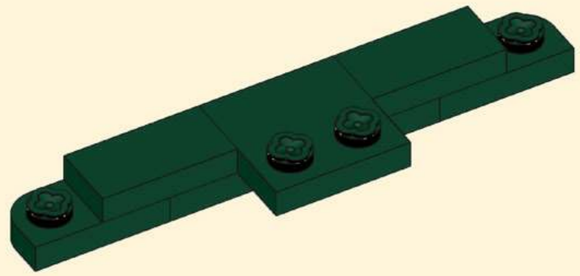

4

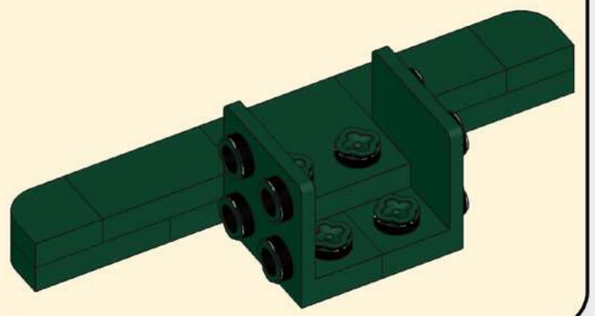

101

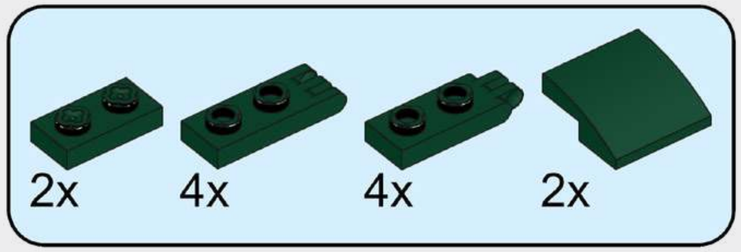

102

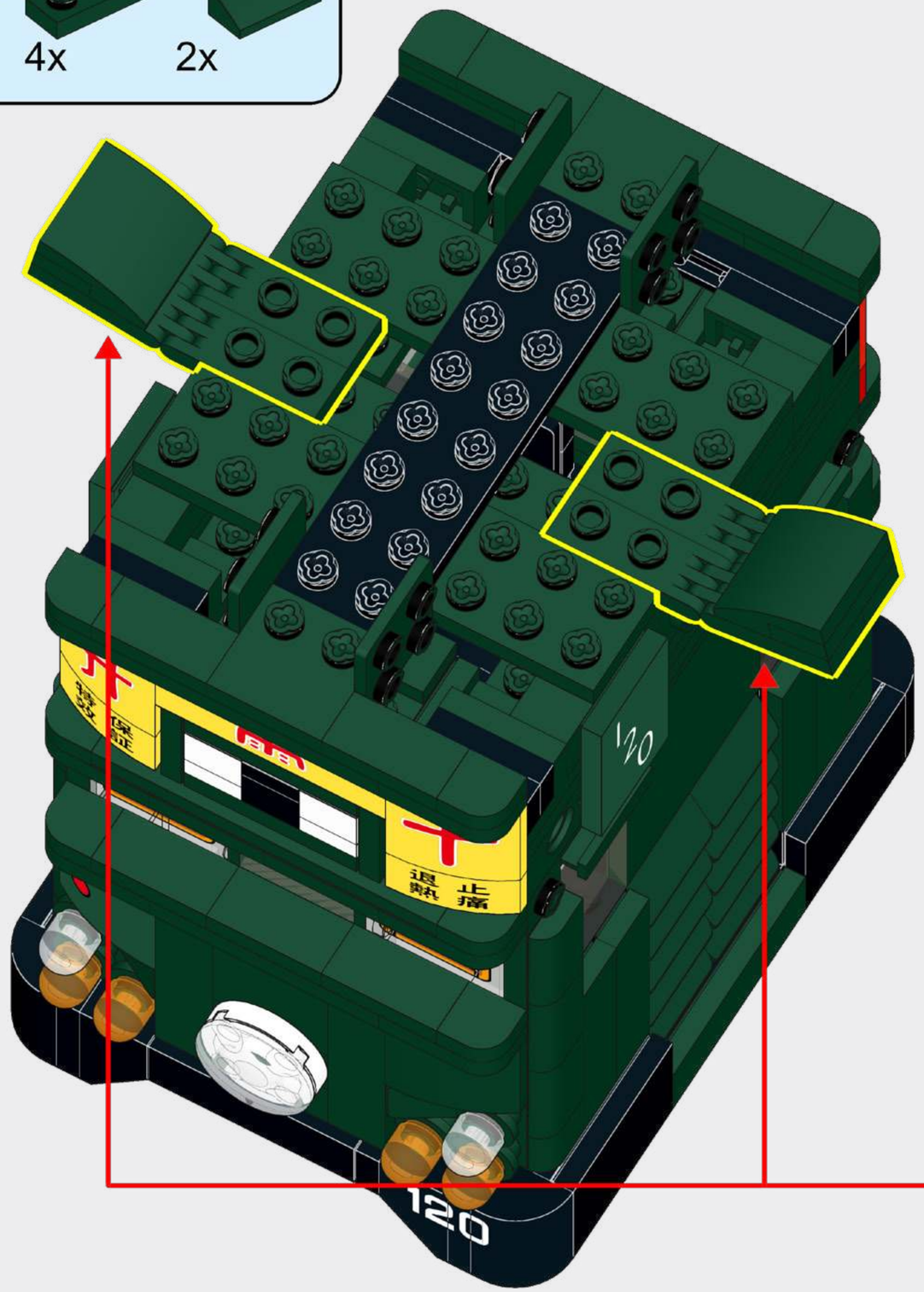

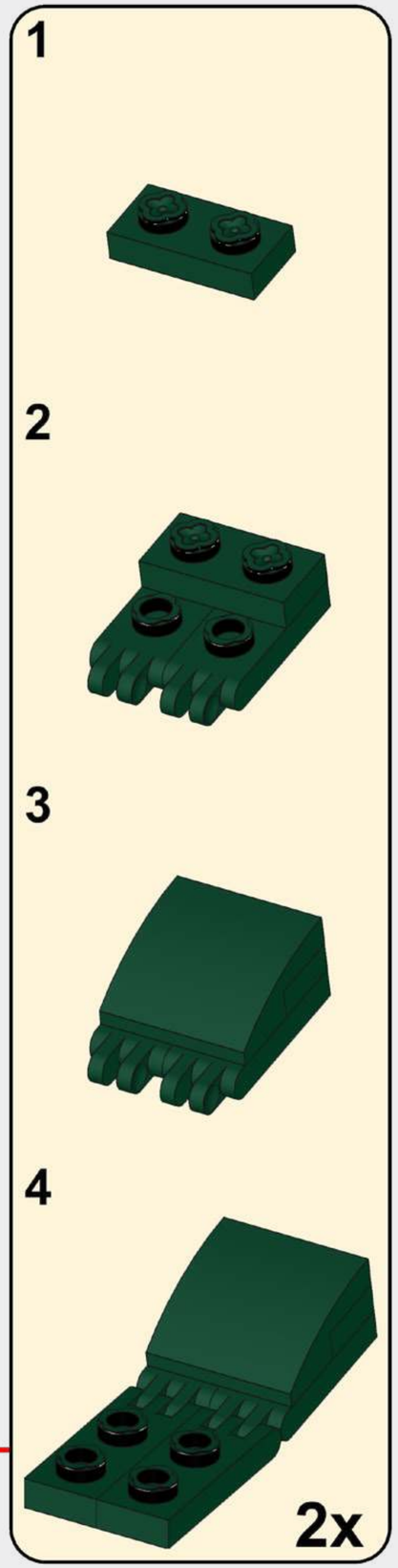

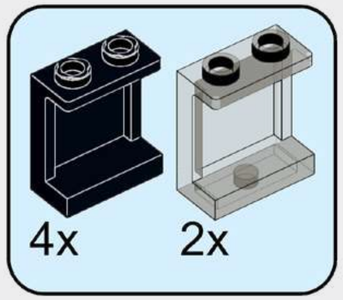

103

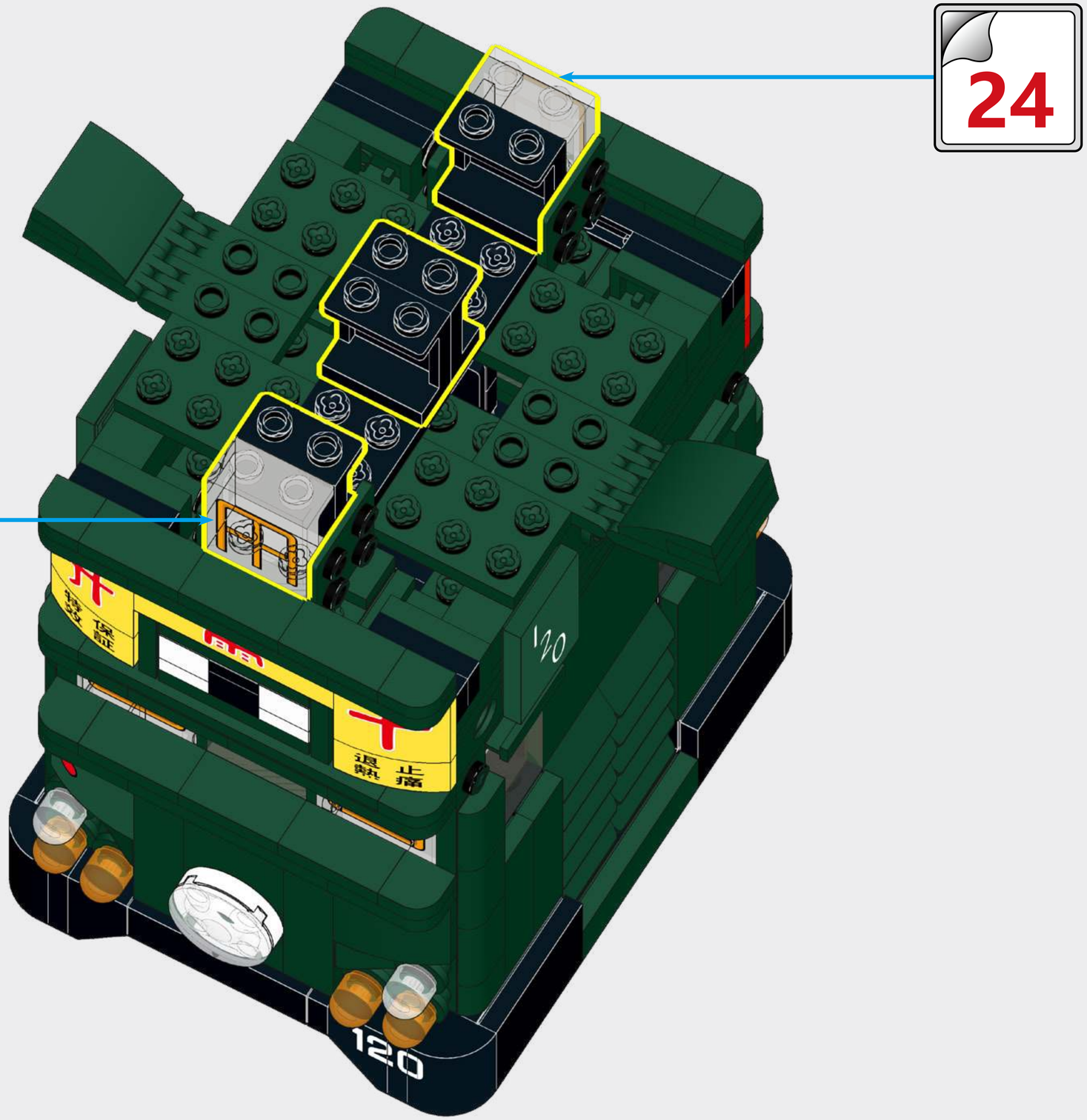

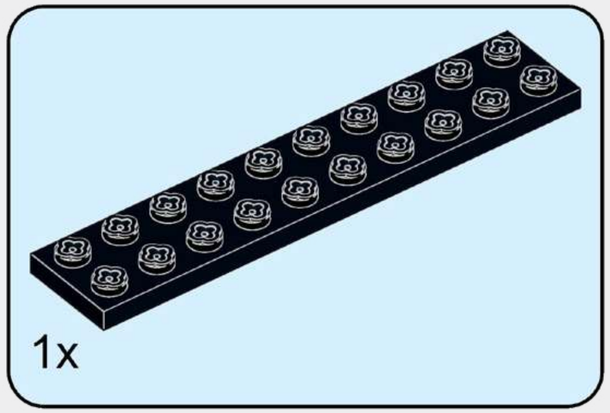

104

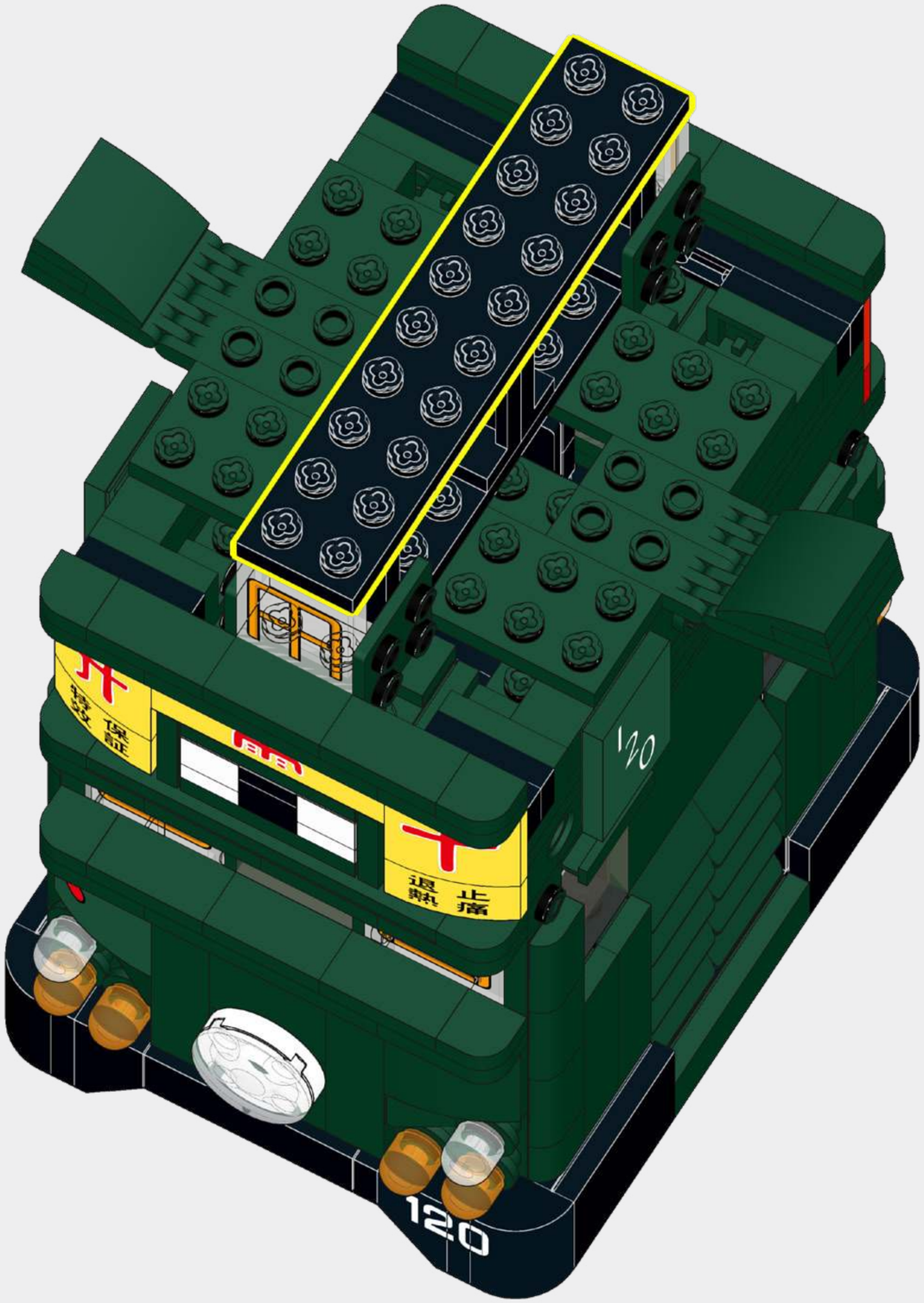

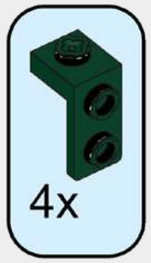

105

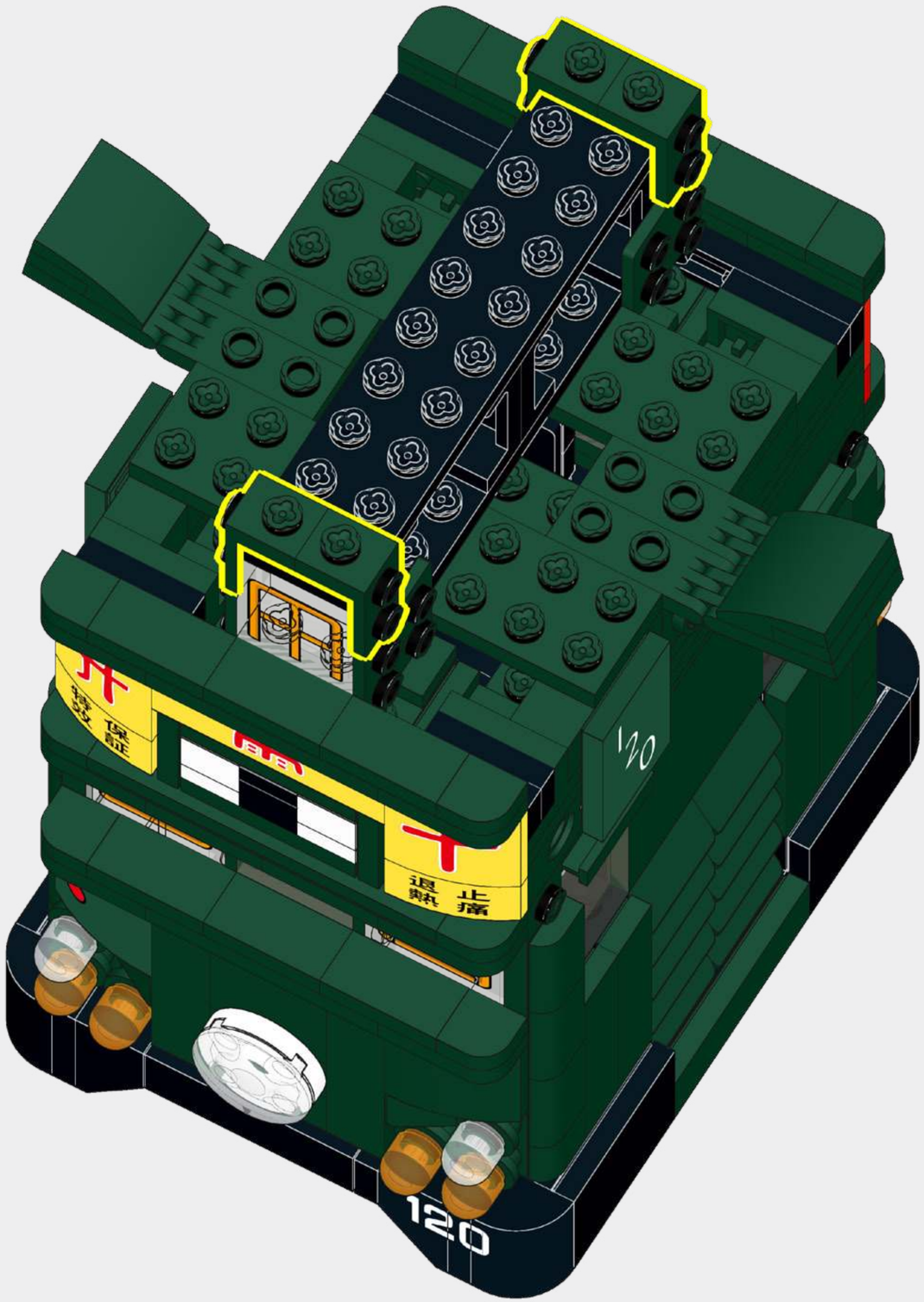

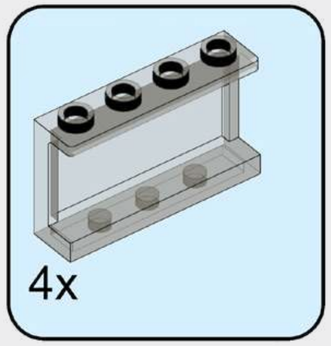

106

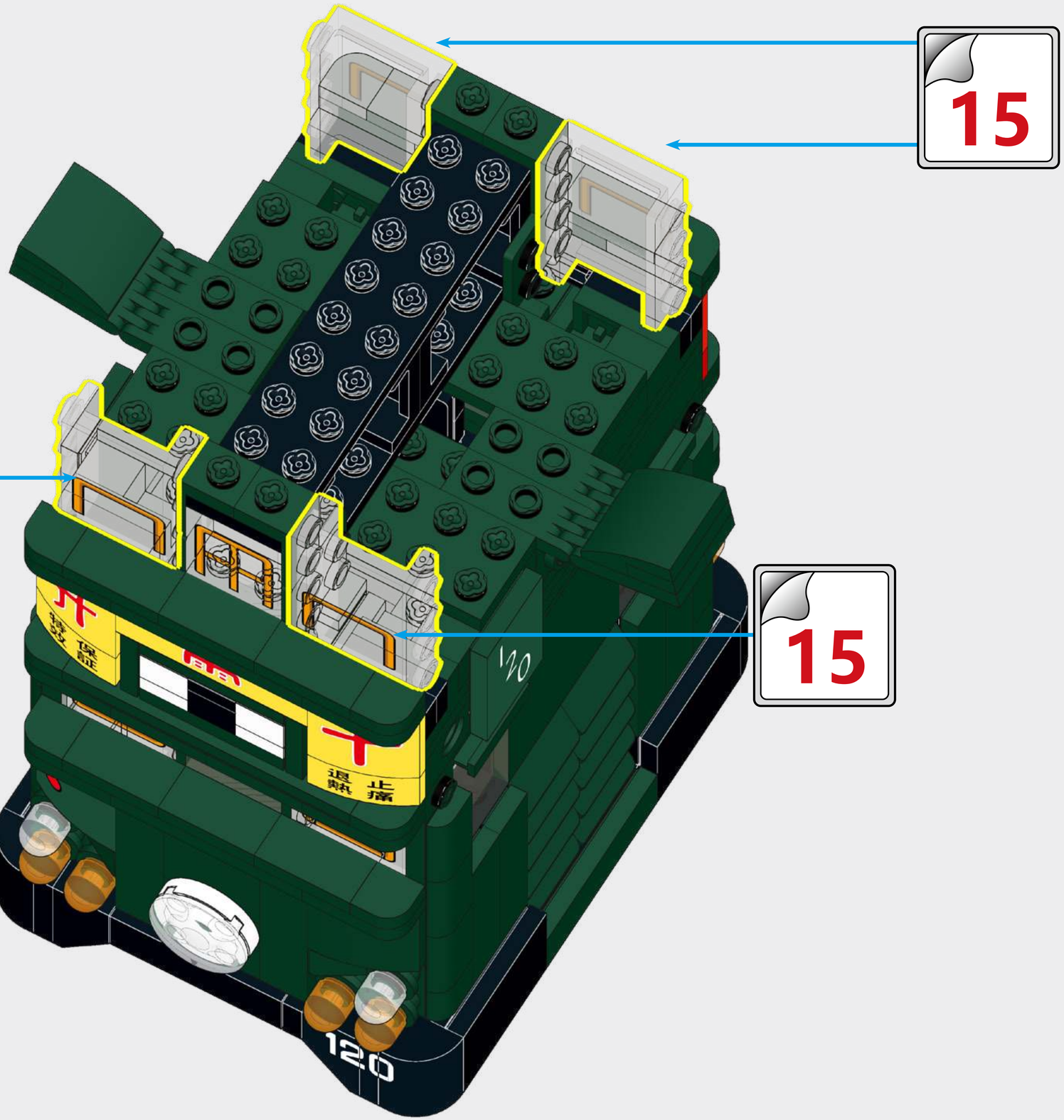

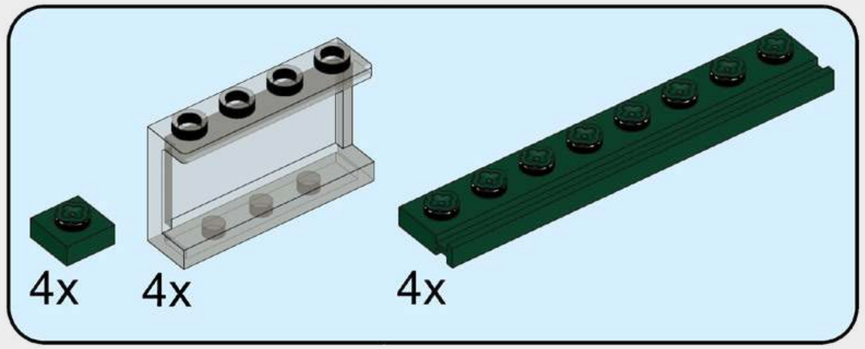

107

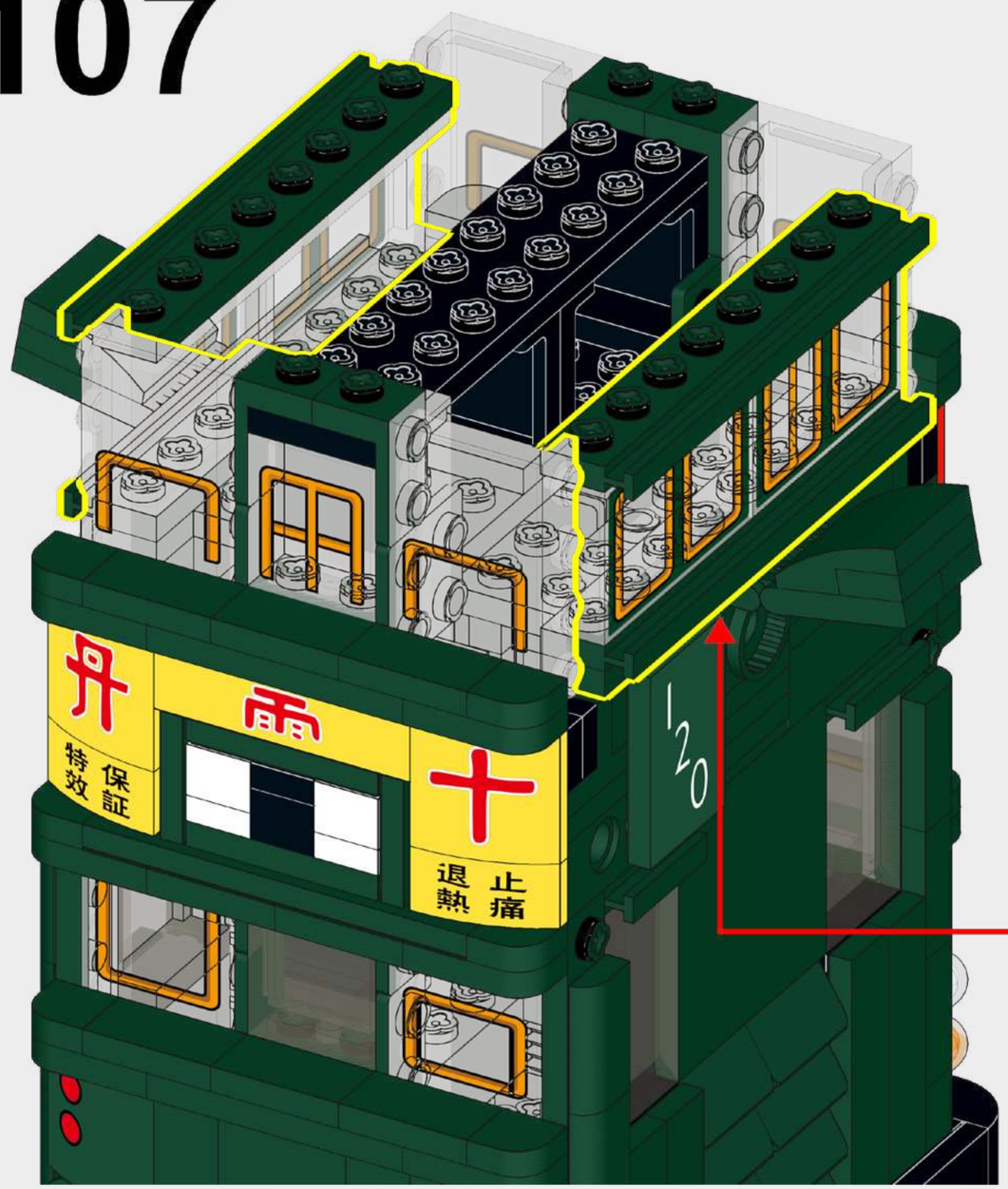

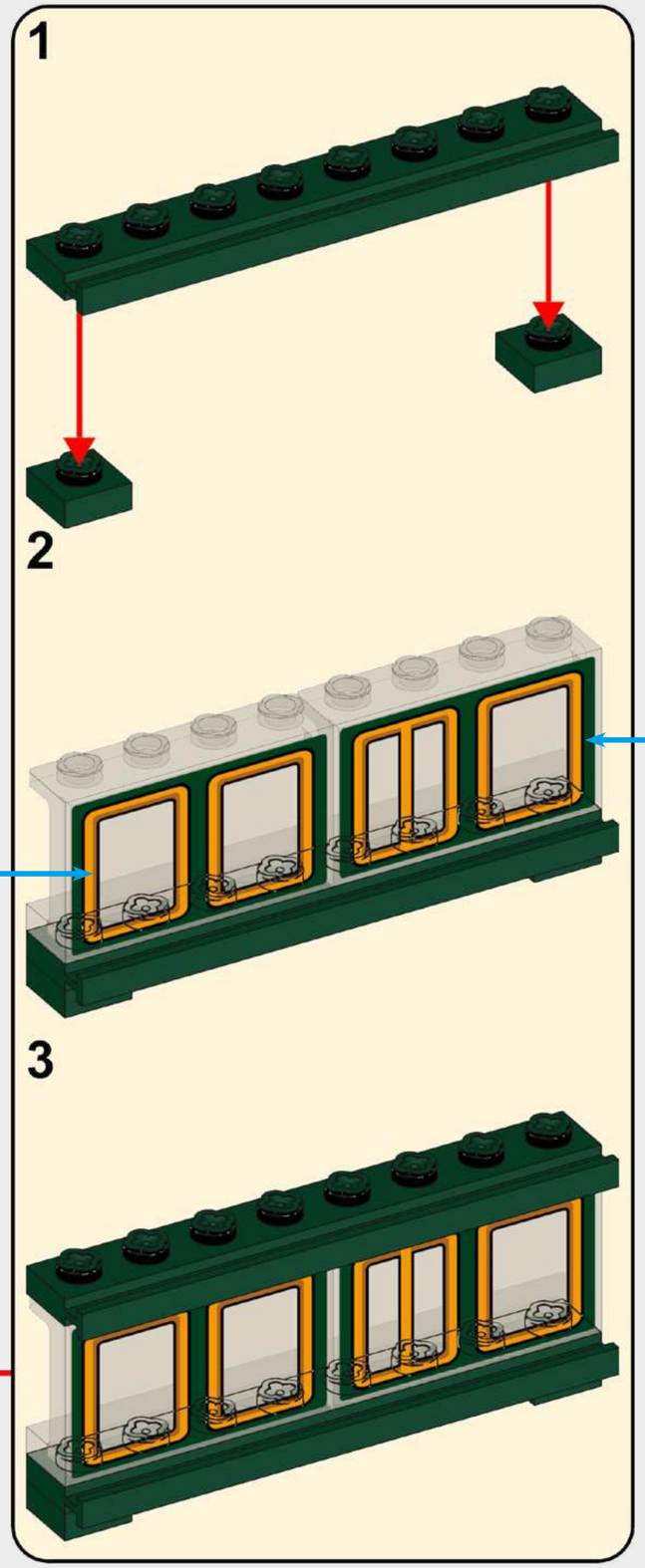

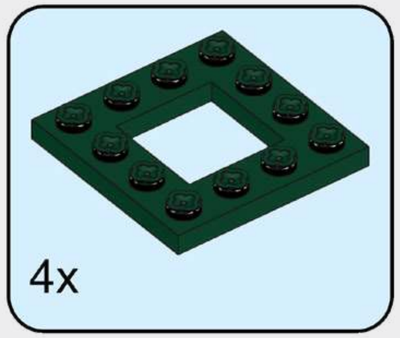

108

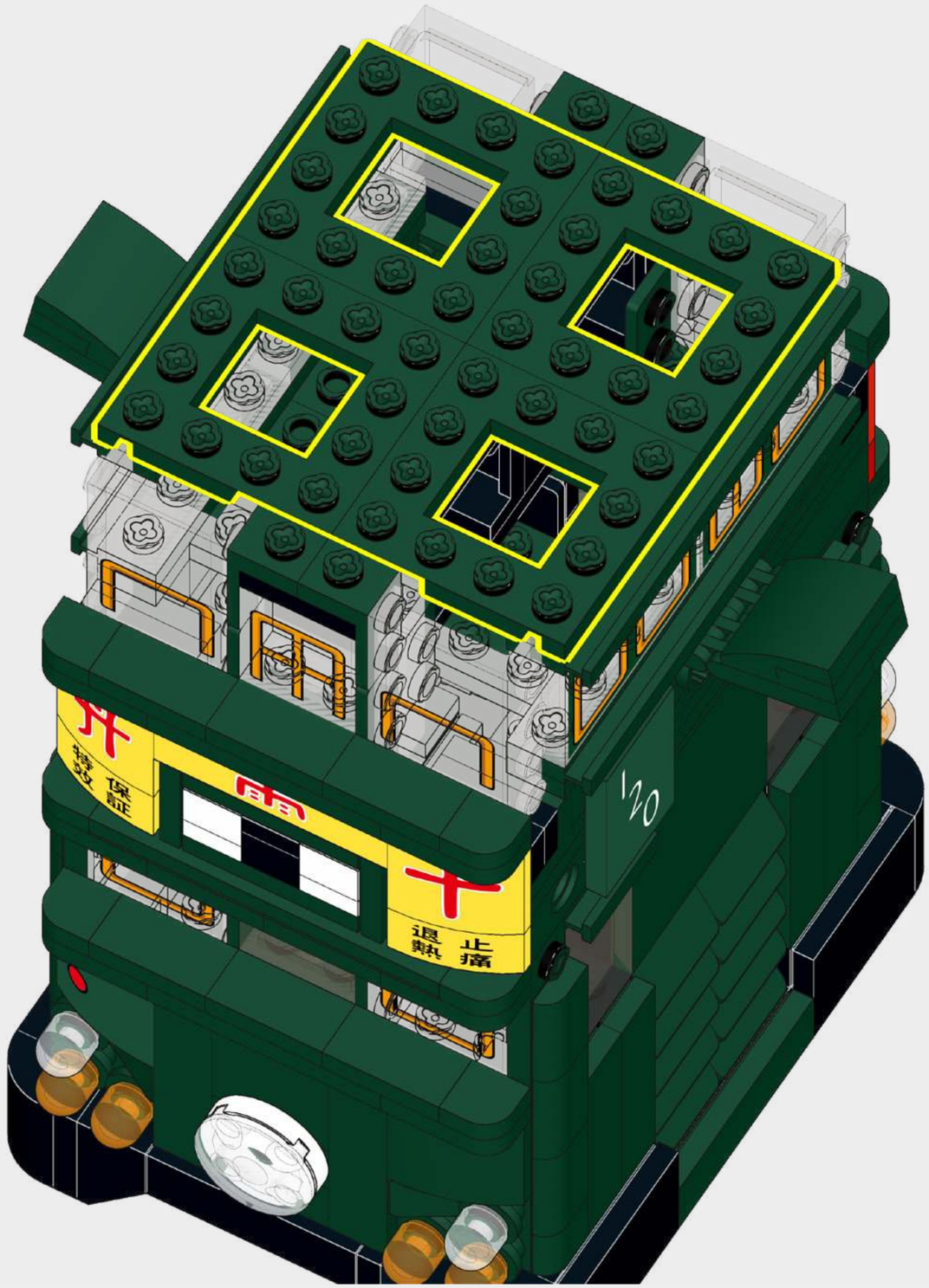

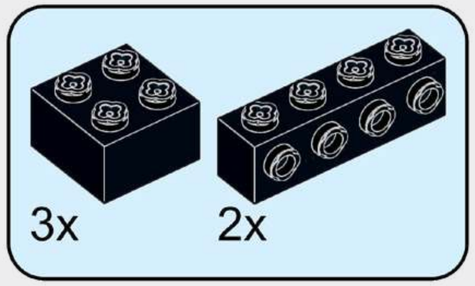

109

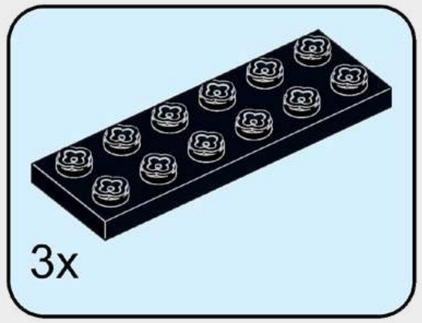

110

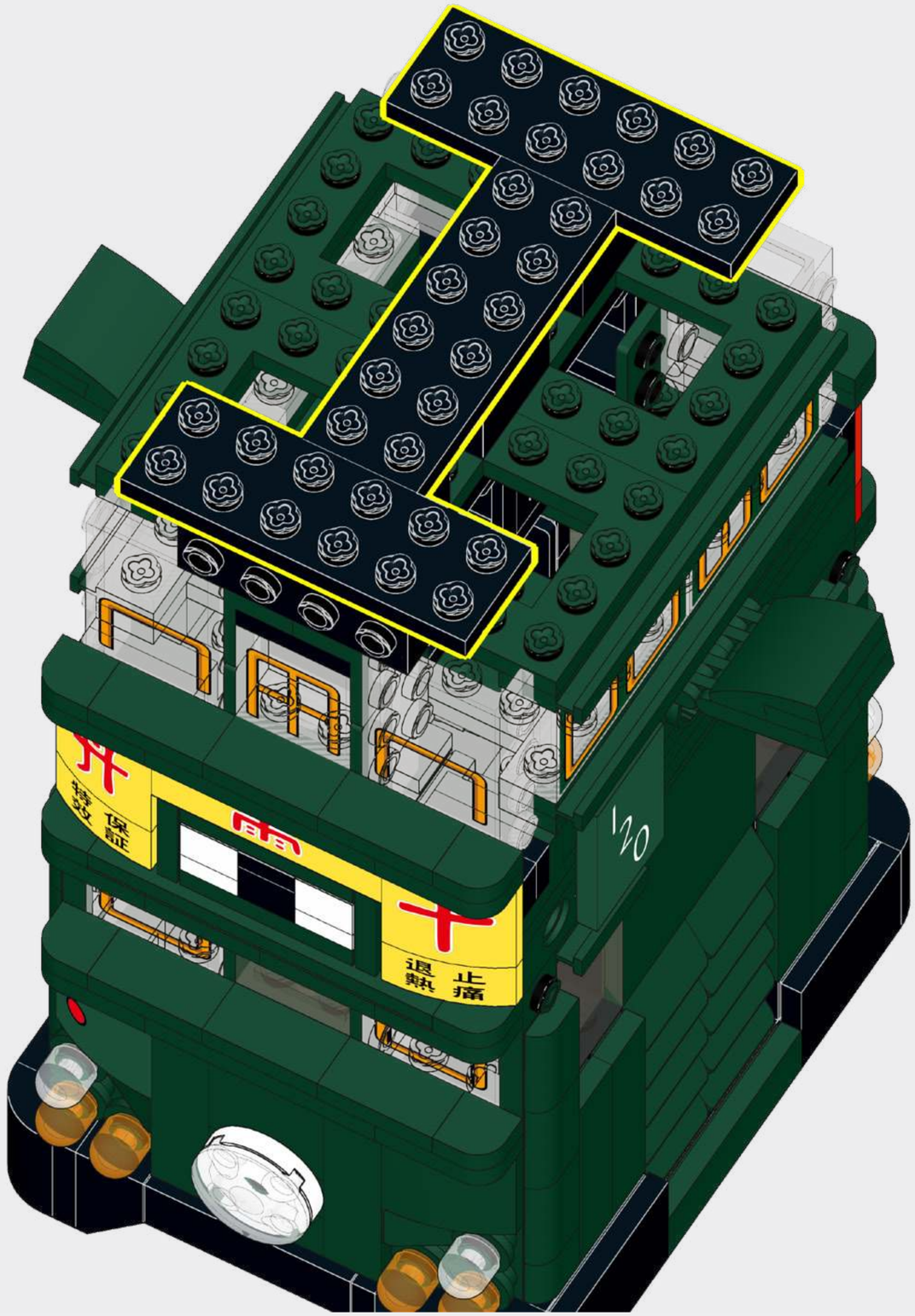

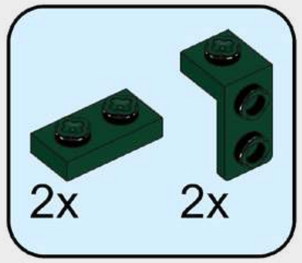

111

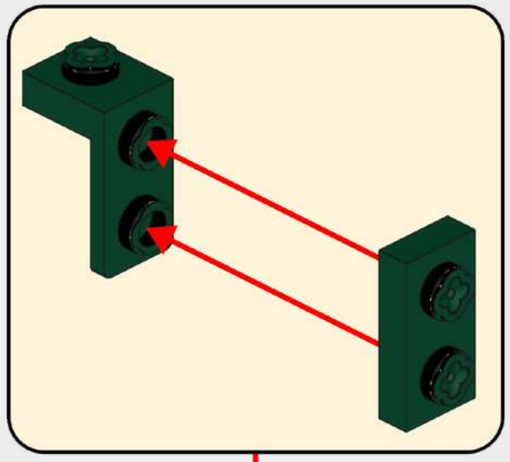

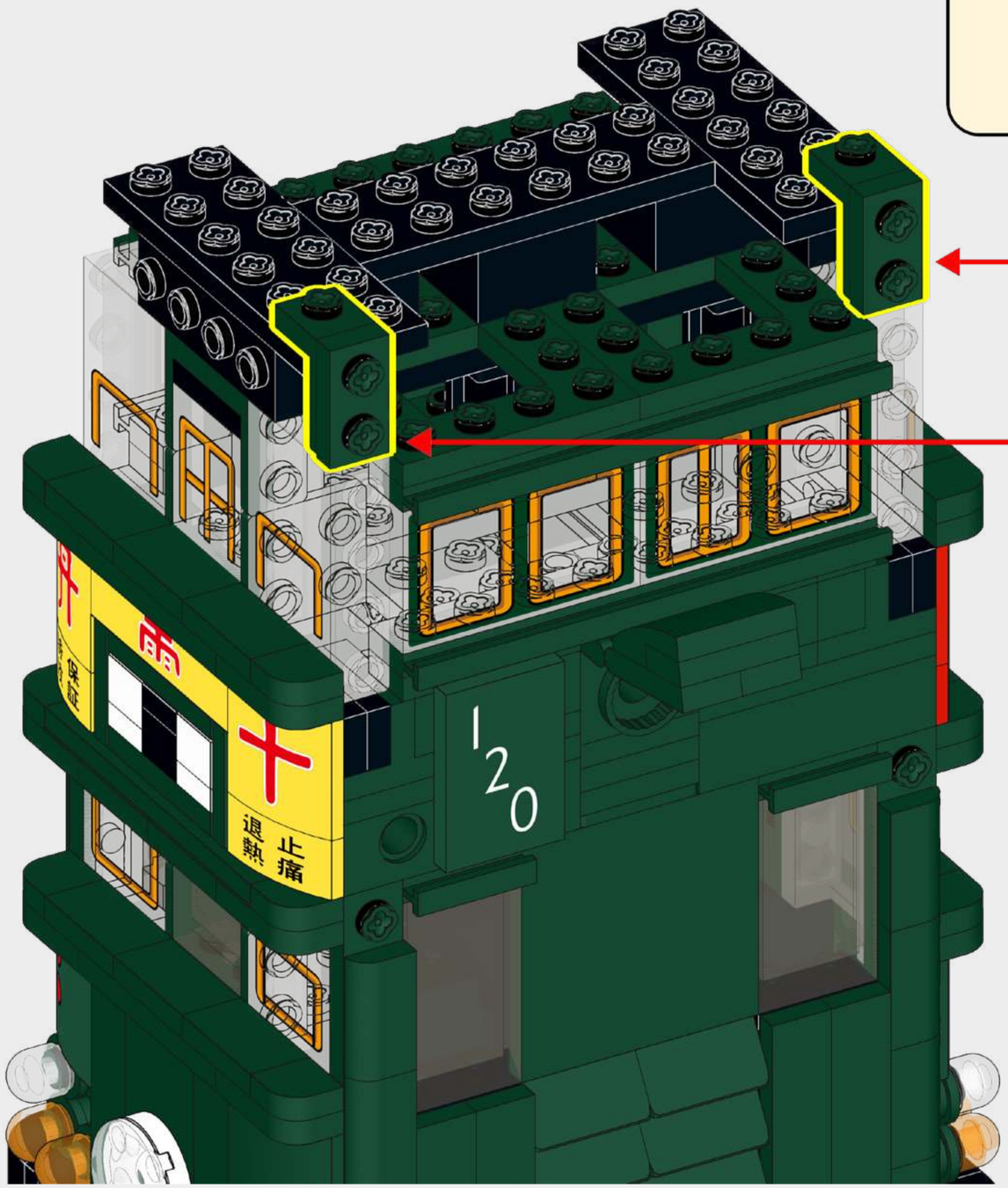

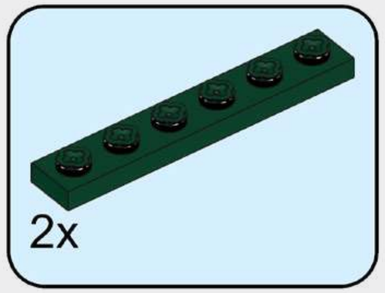

112

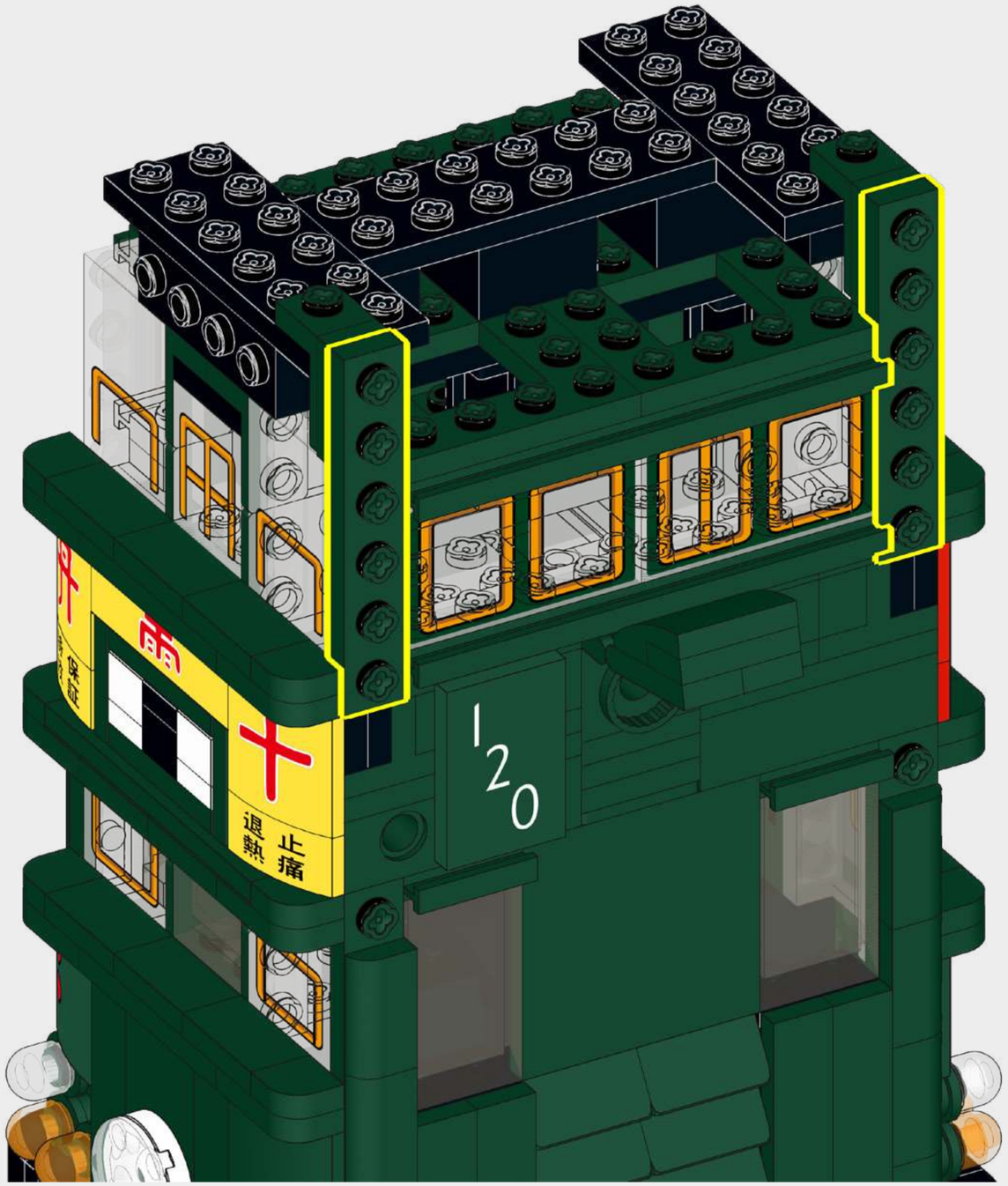

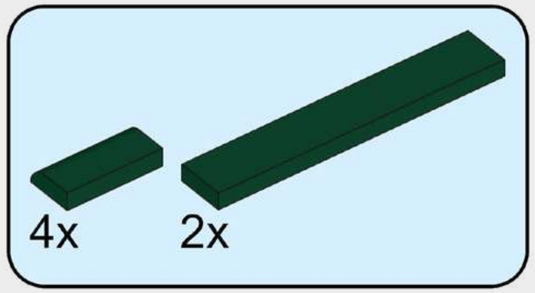

113

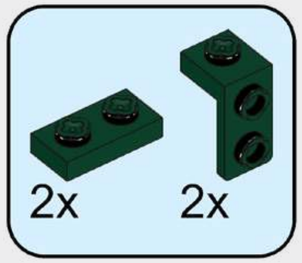

114

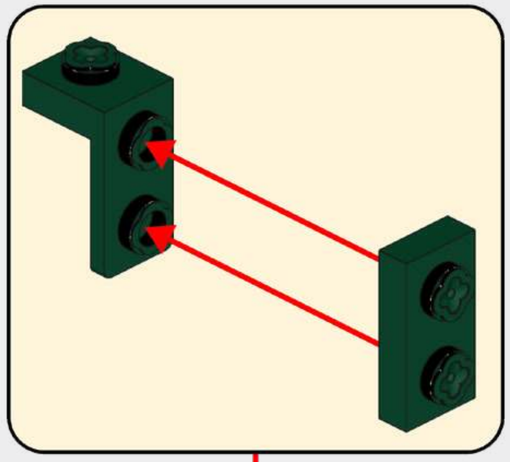

2x

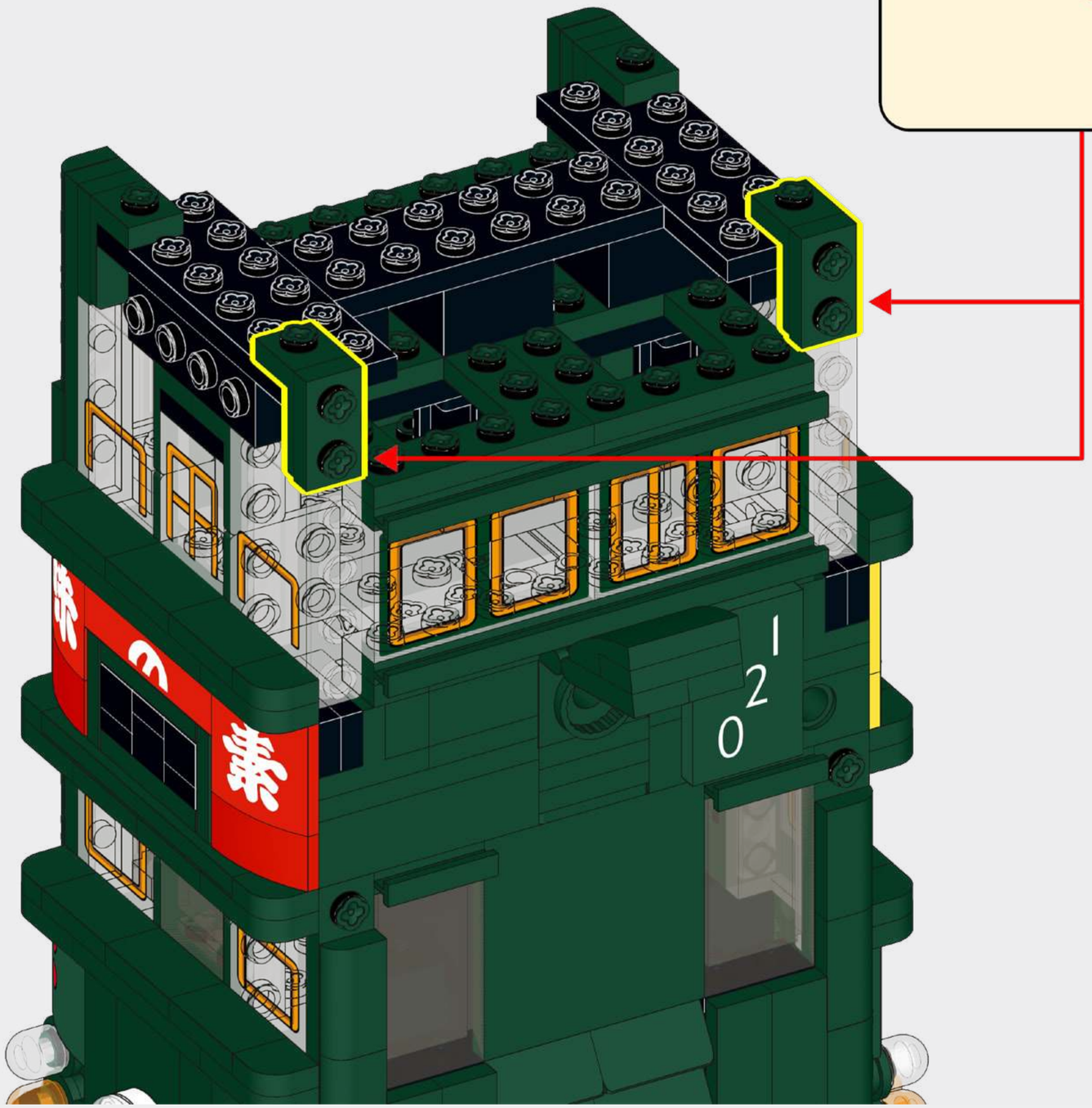

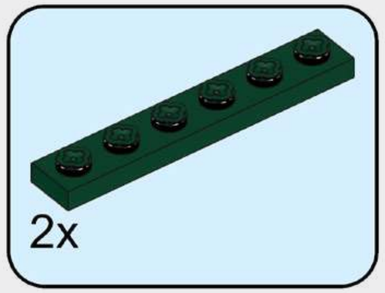

115

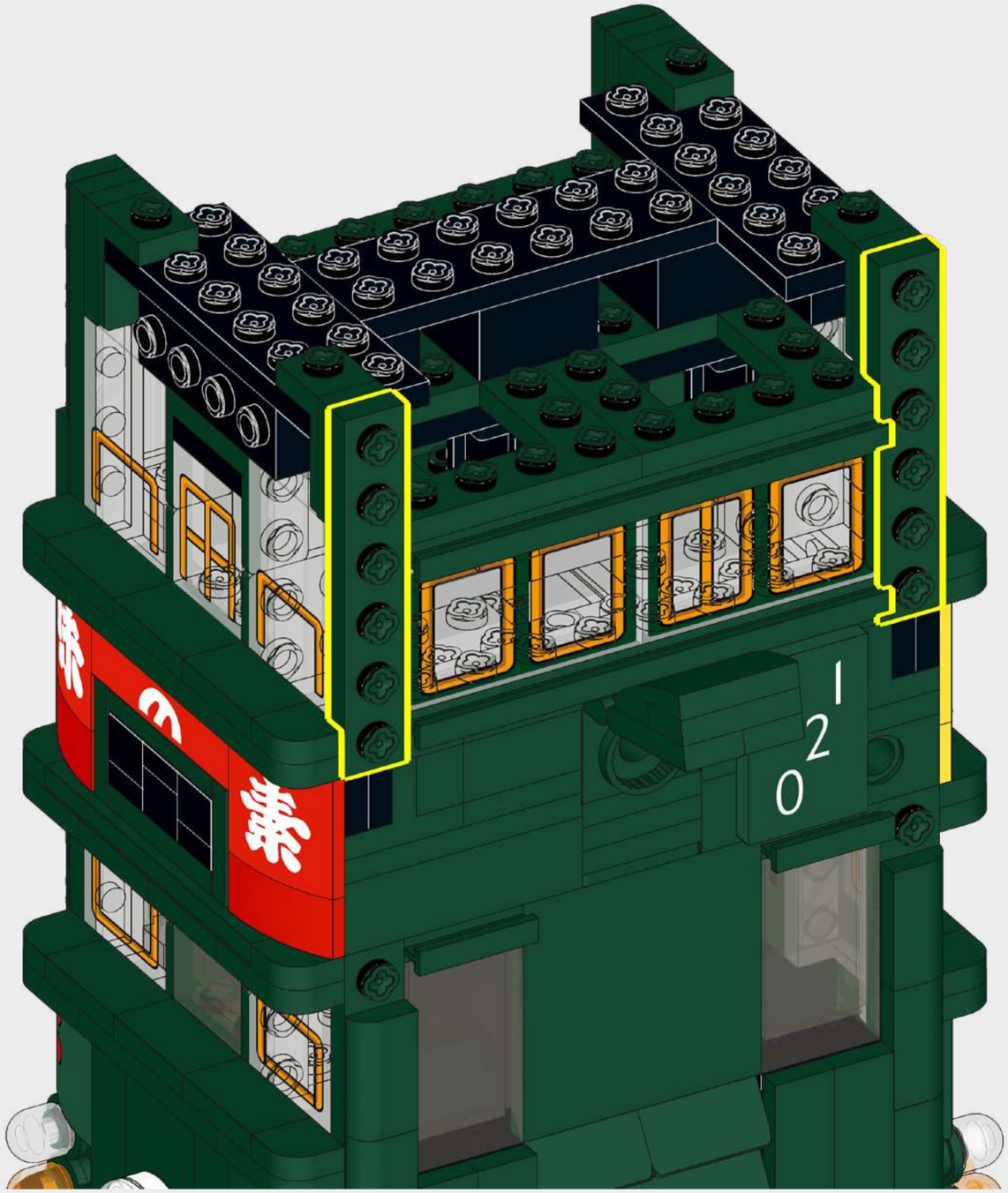

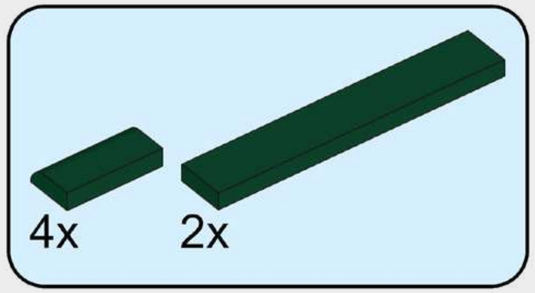

116

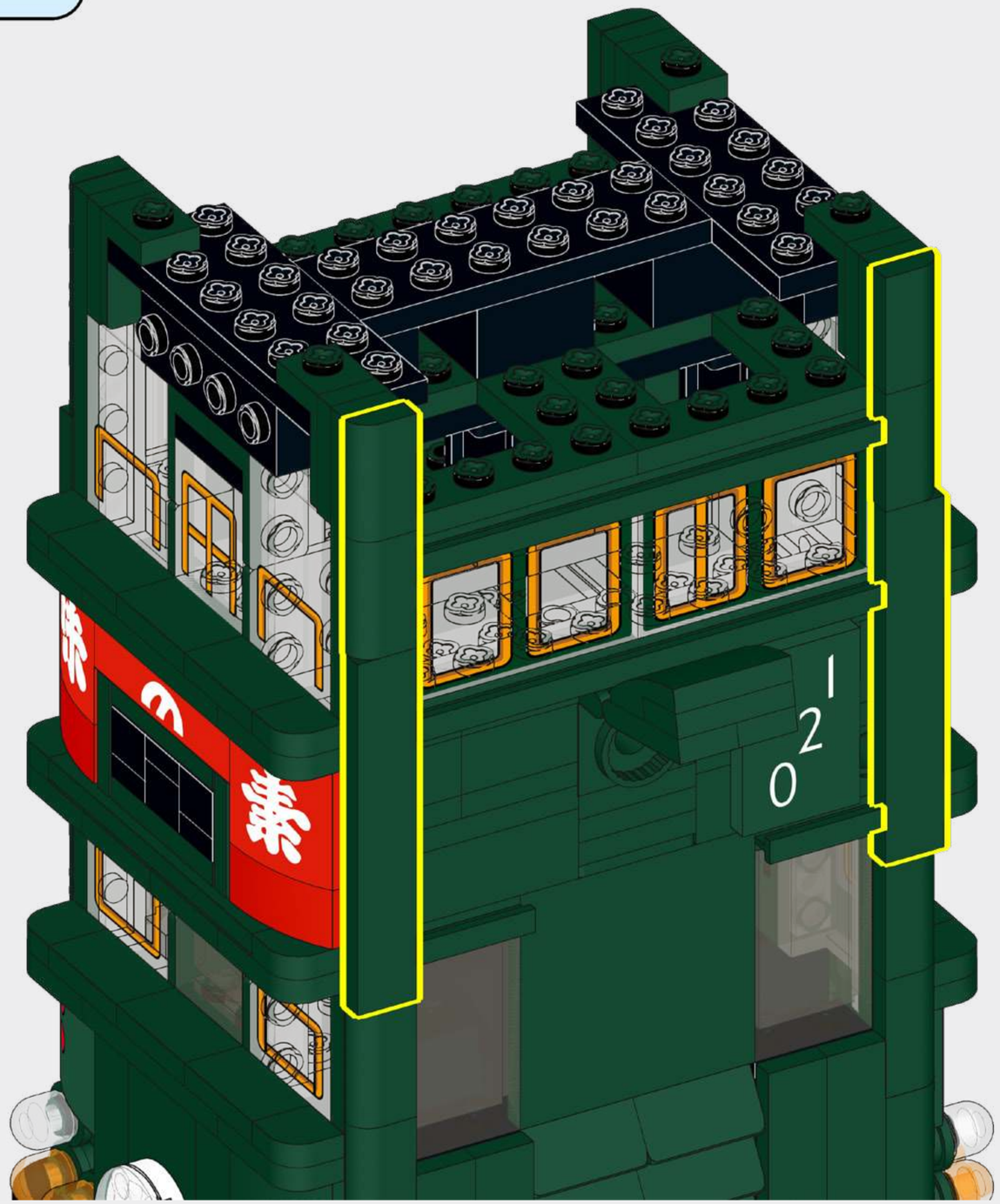

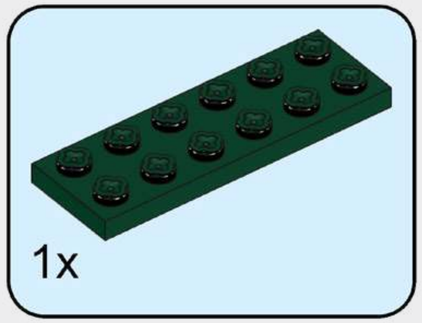

117

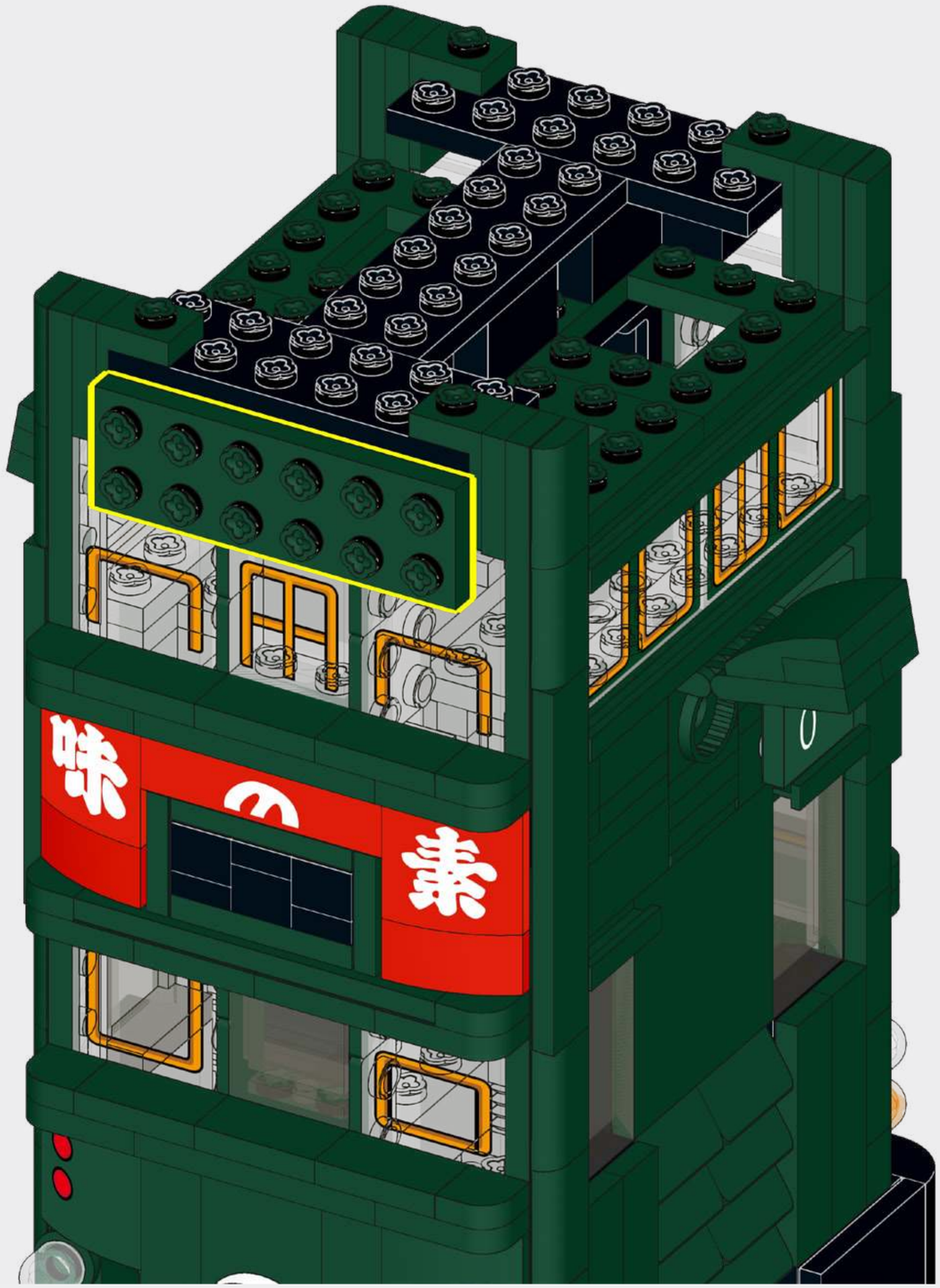

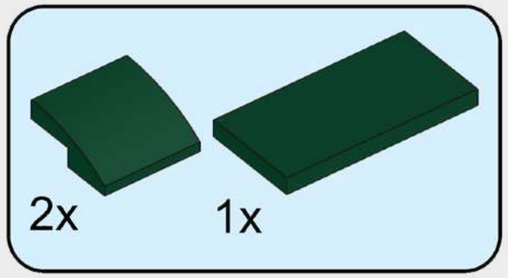

118

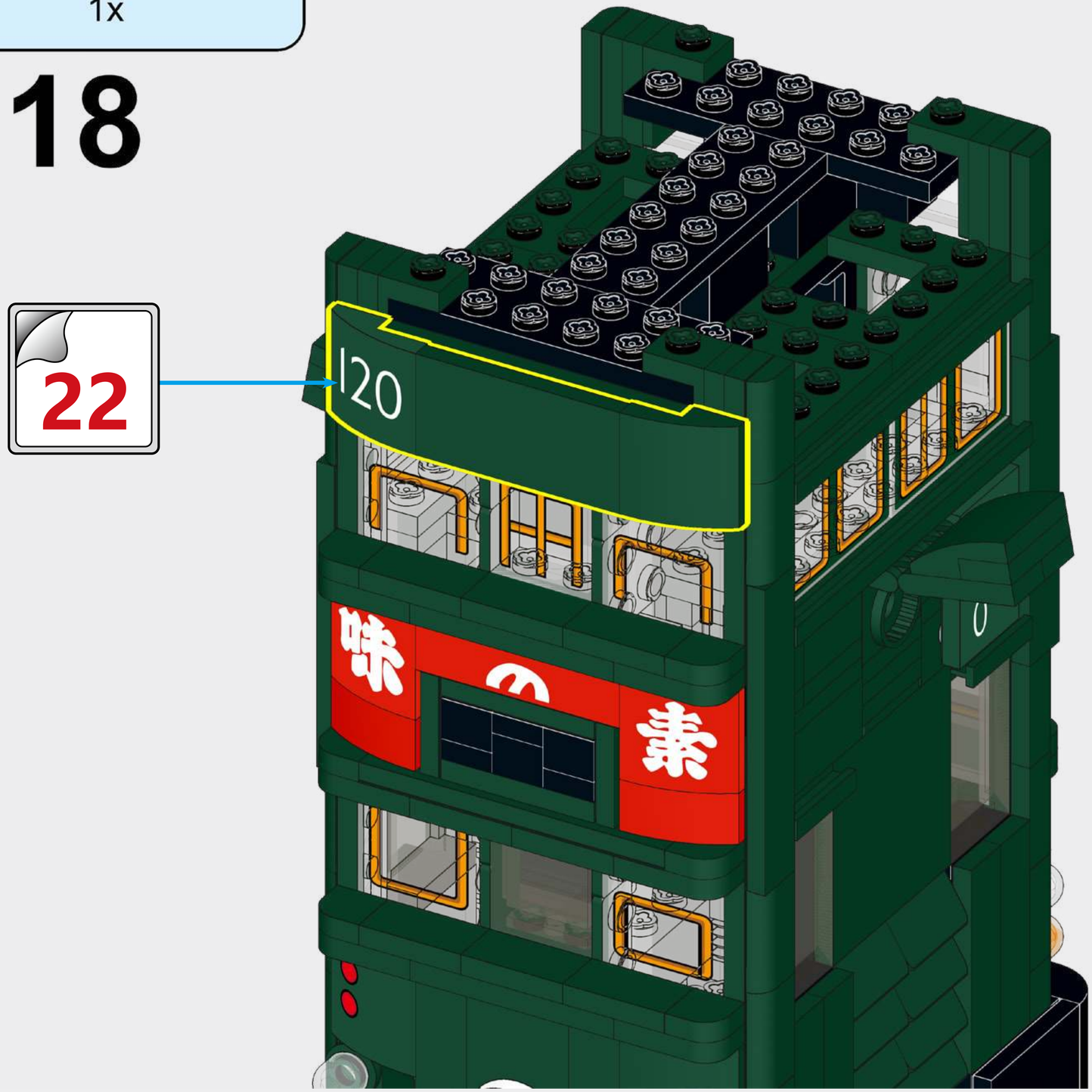

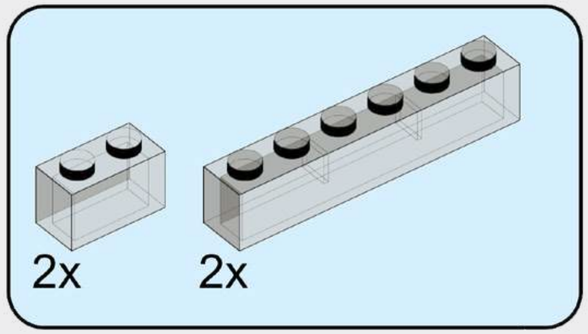

119

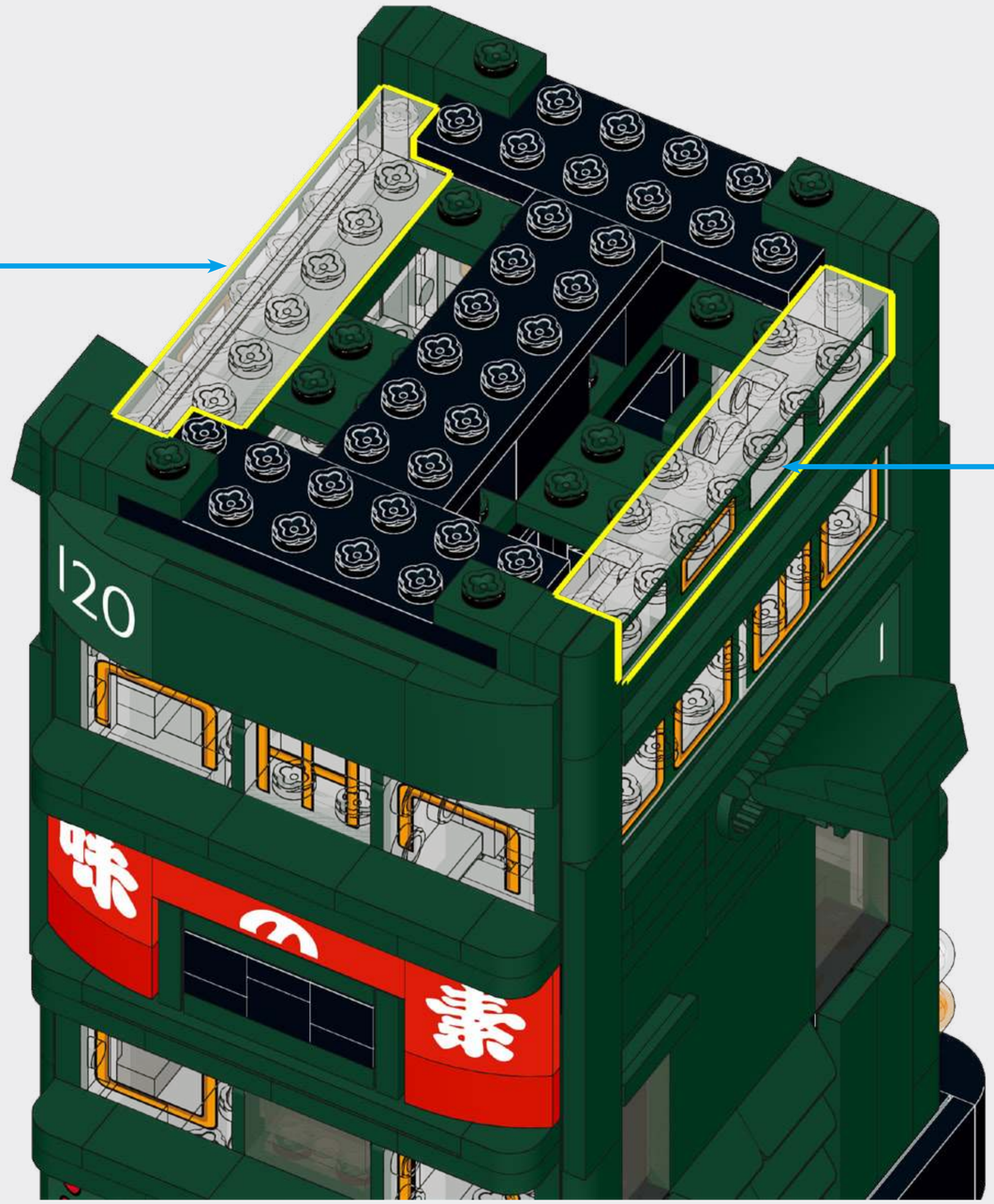

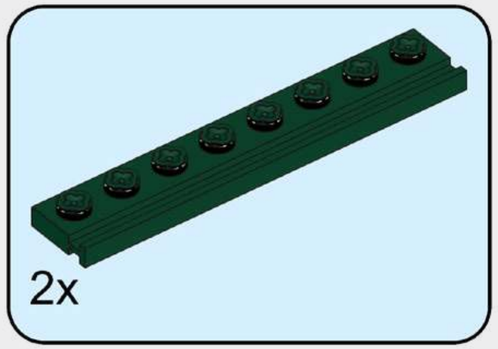

120

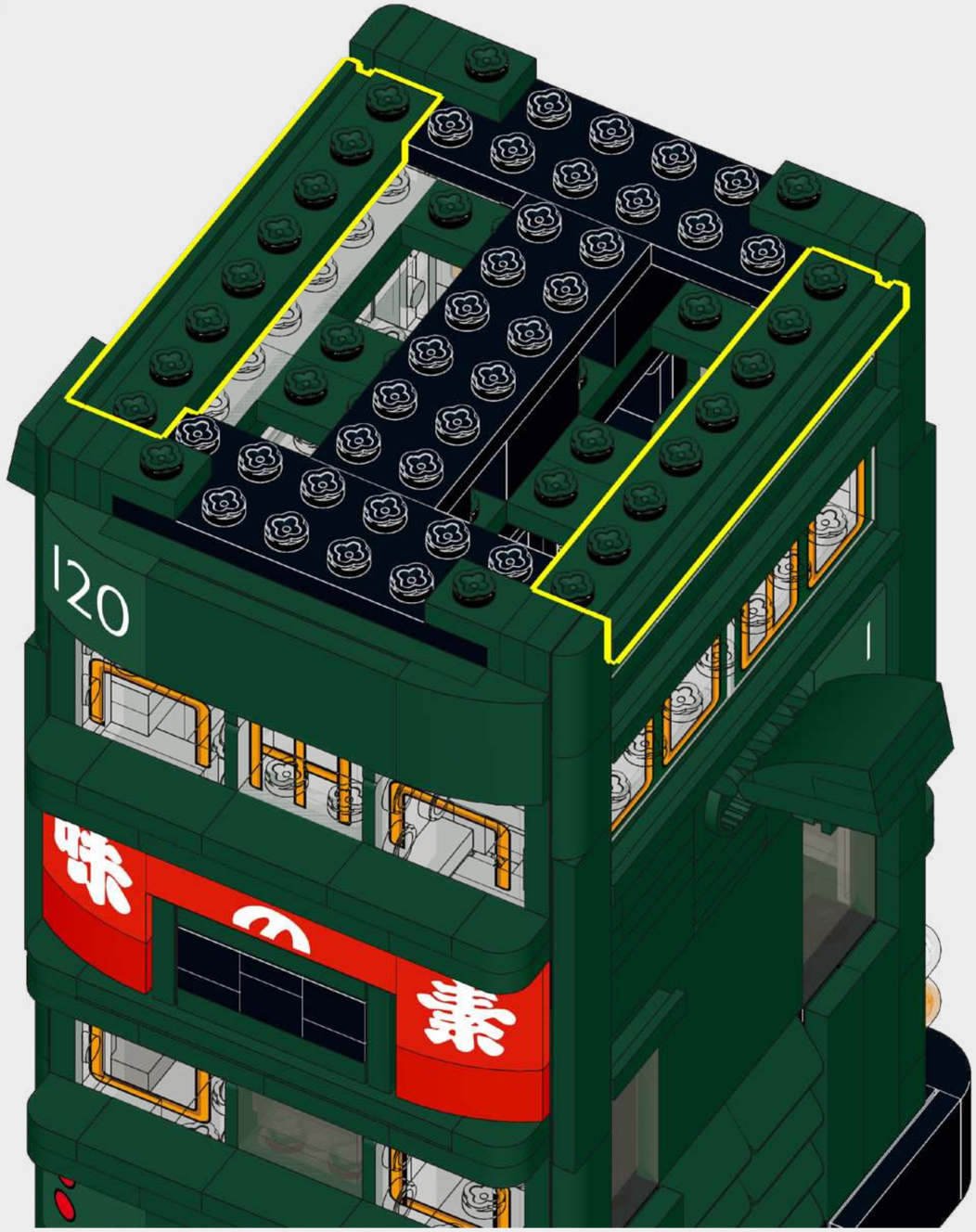

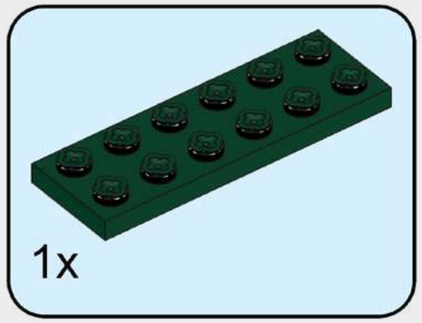

121

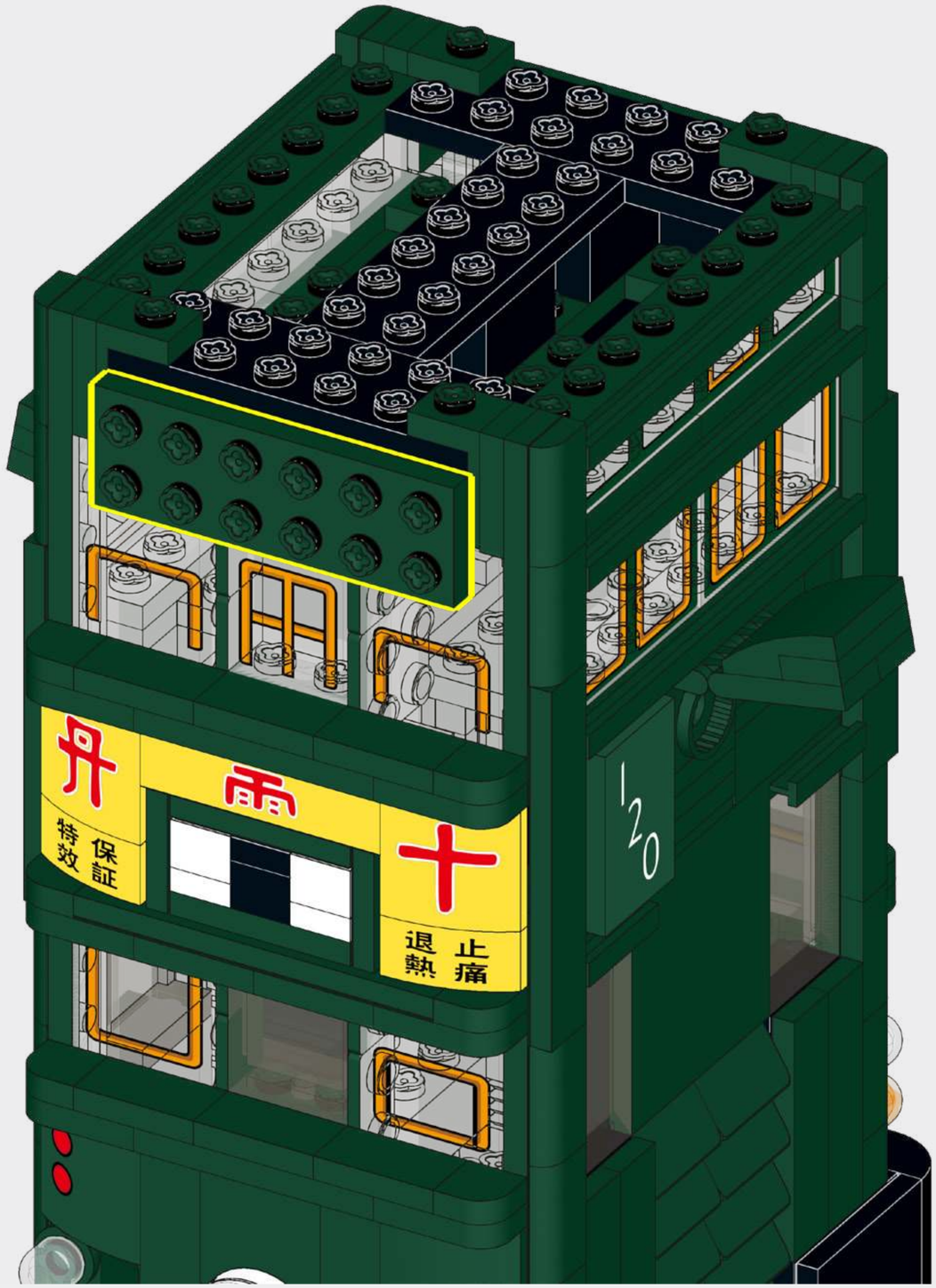

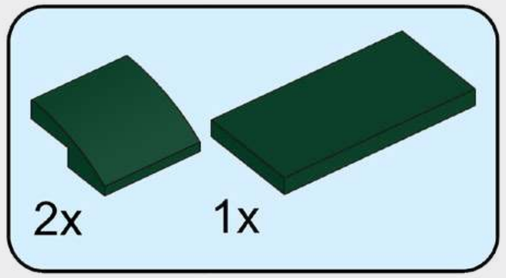

122

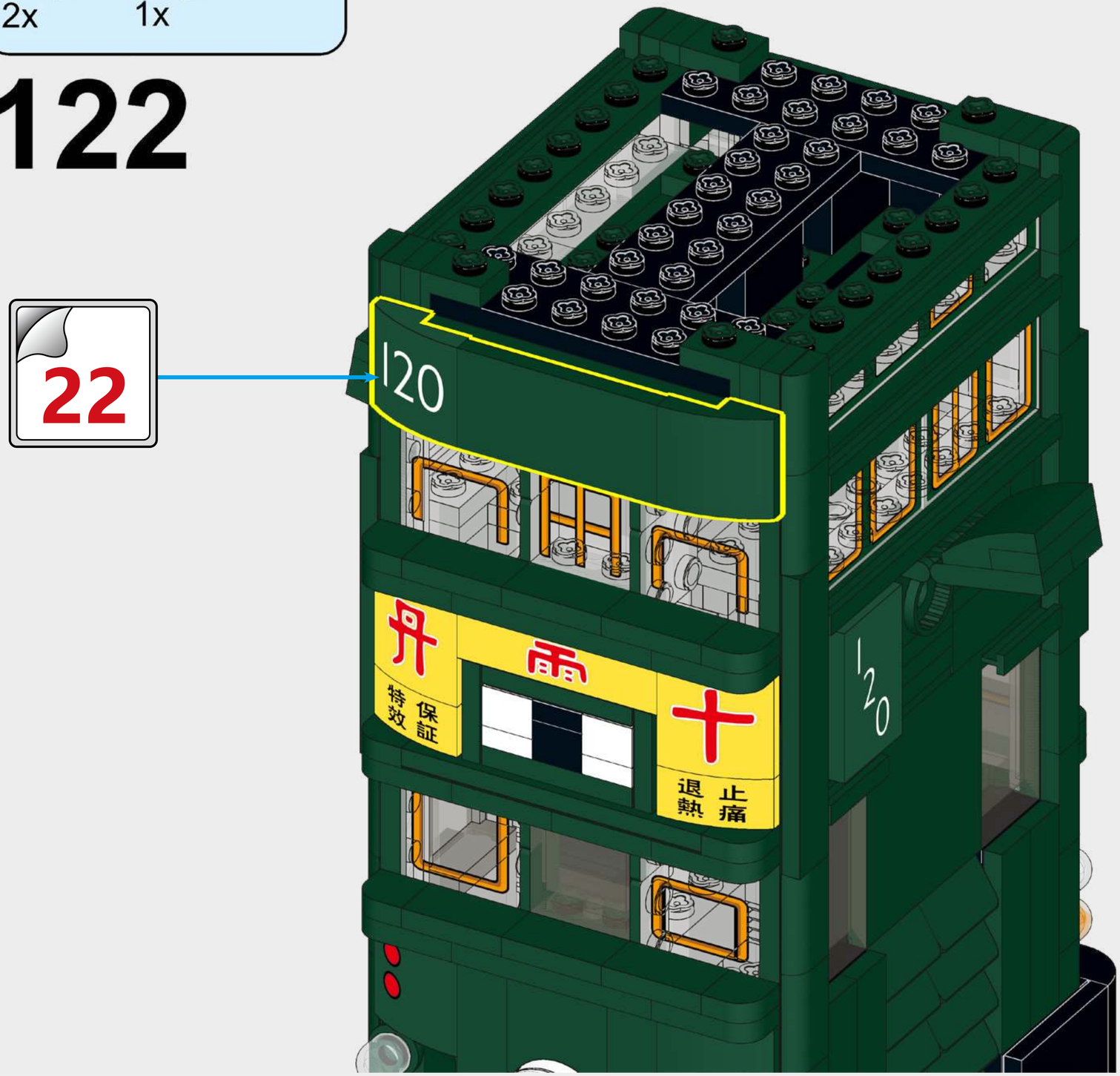

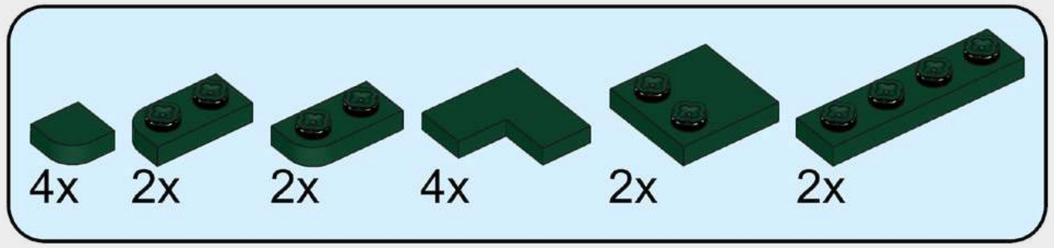

123

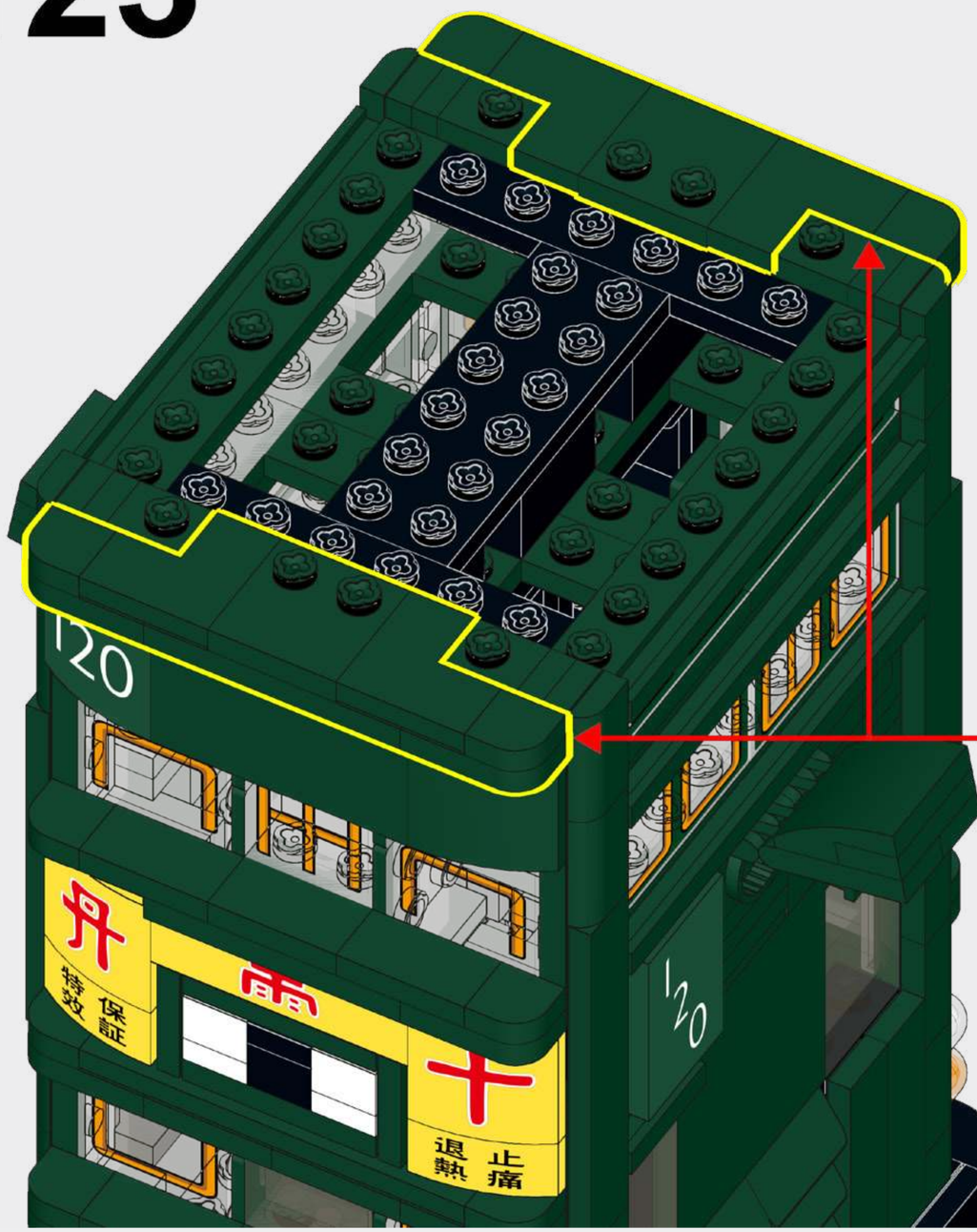

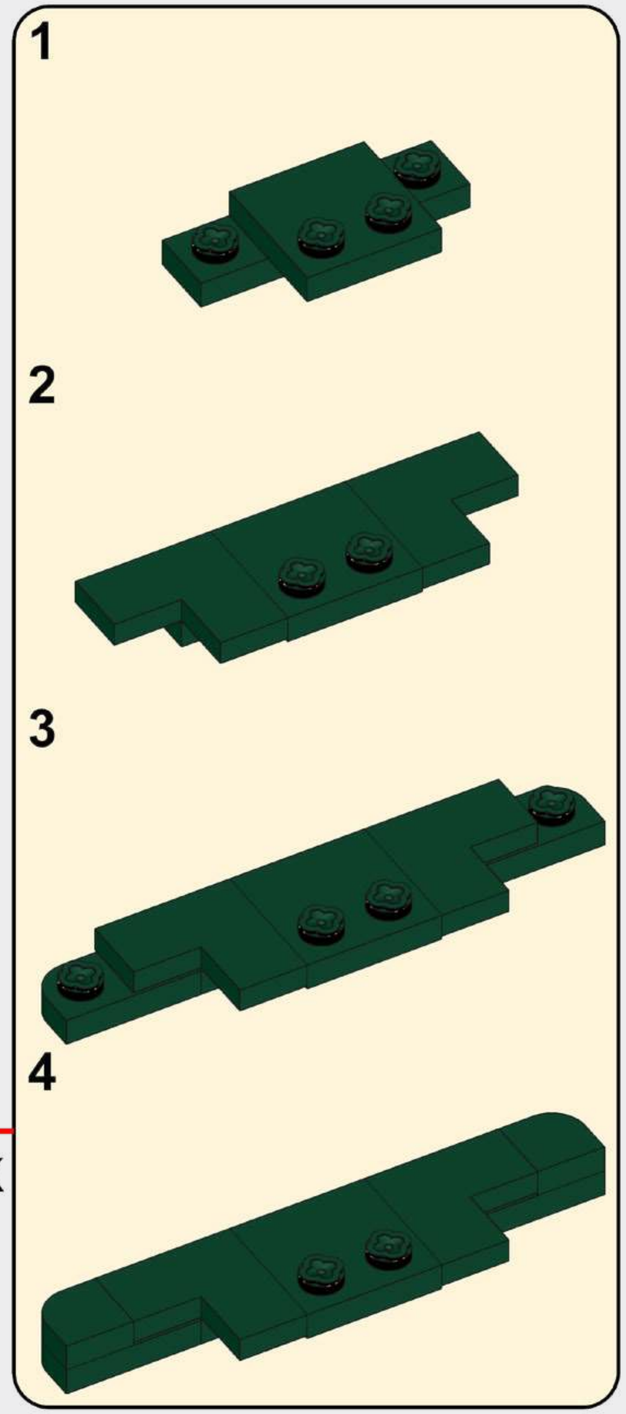

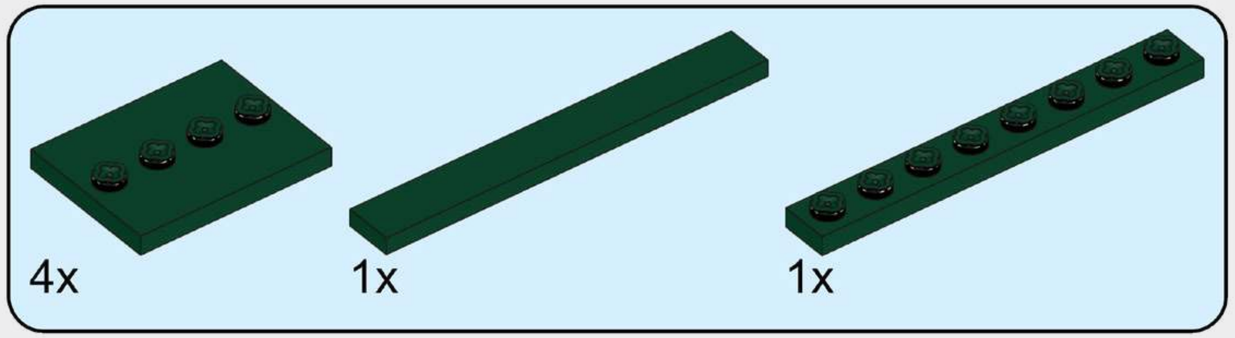

124

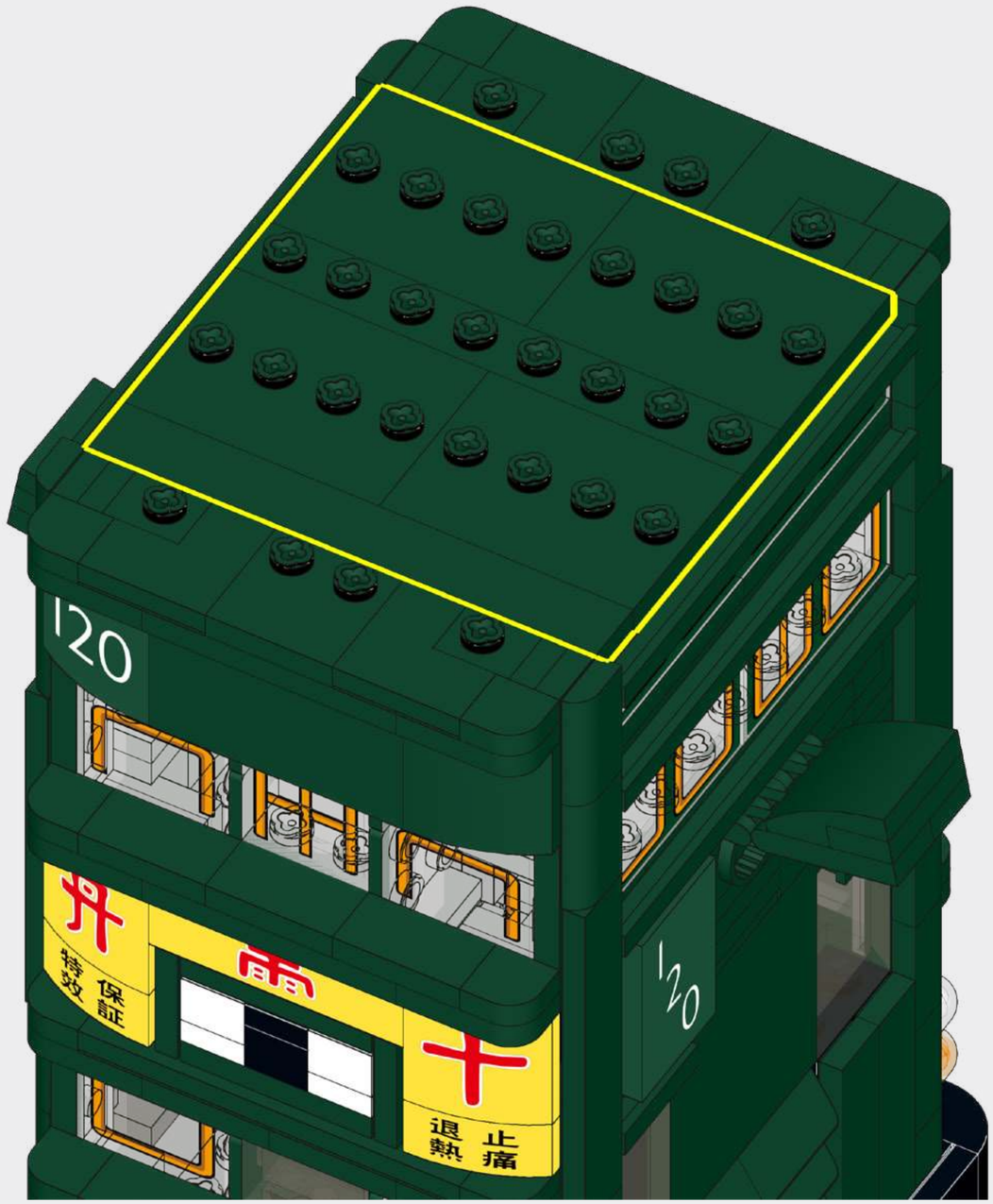

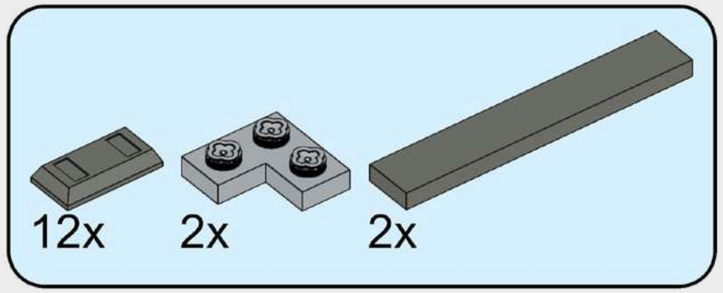

125

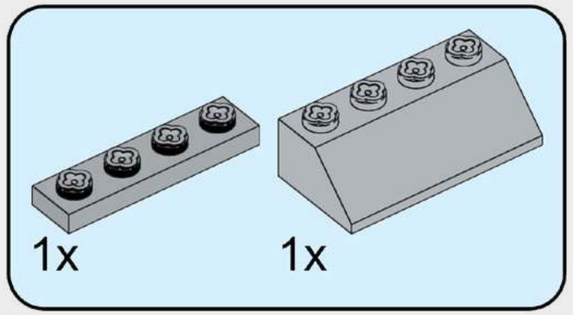

126

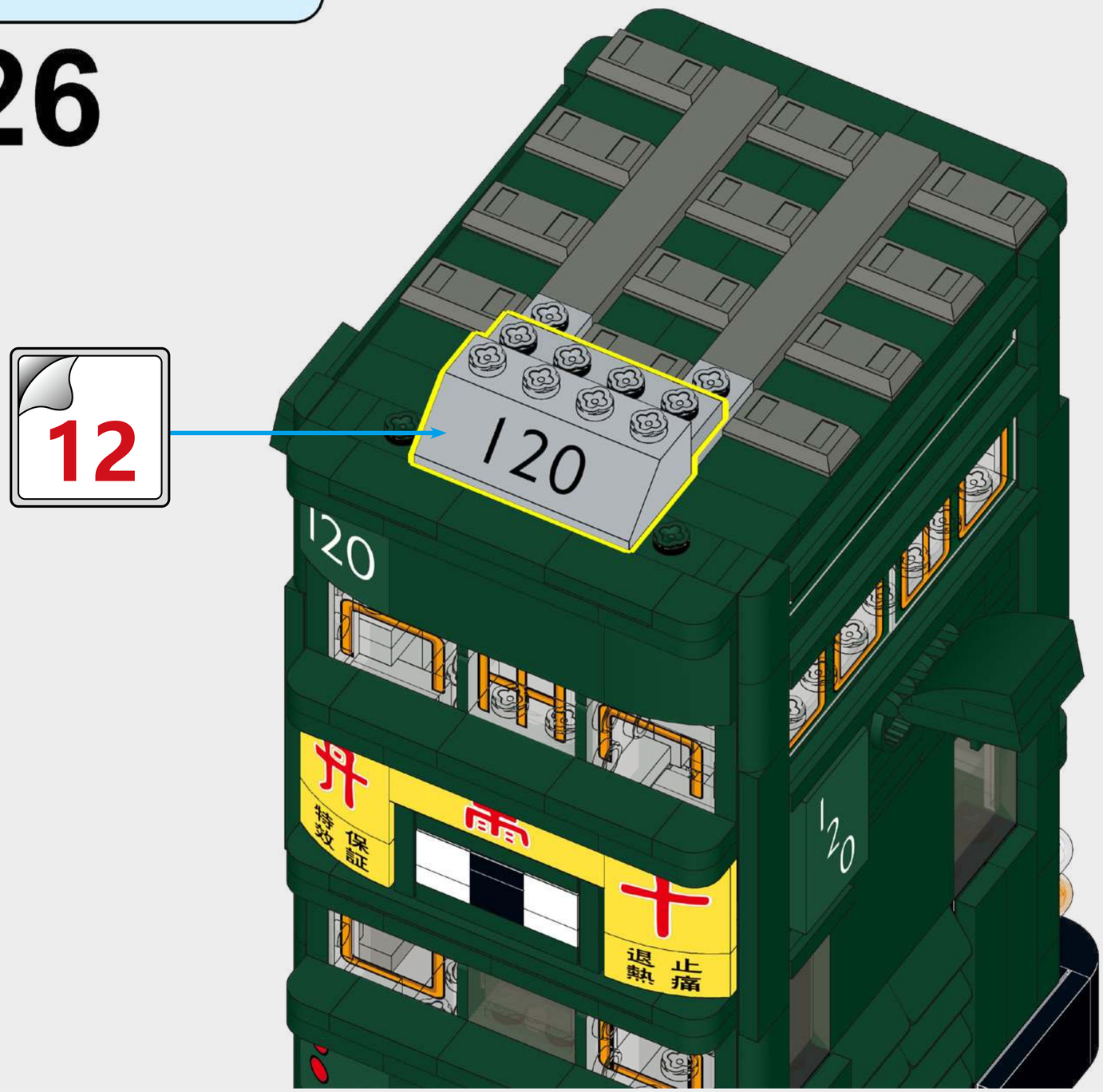

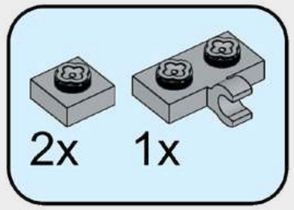

127

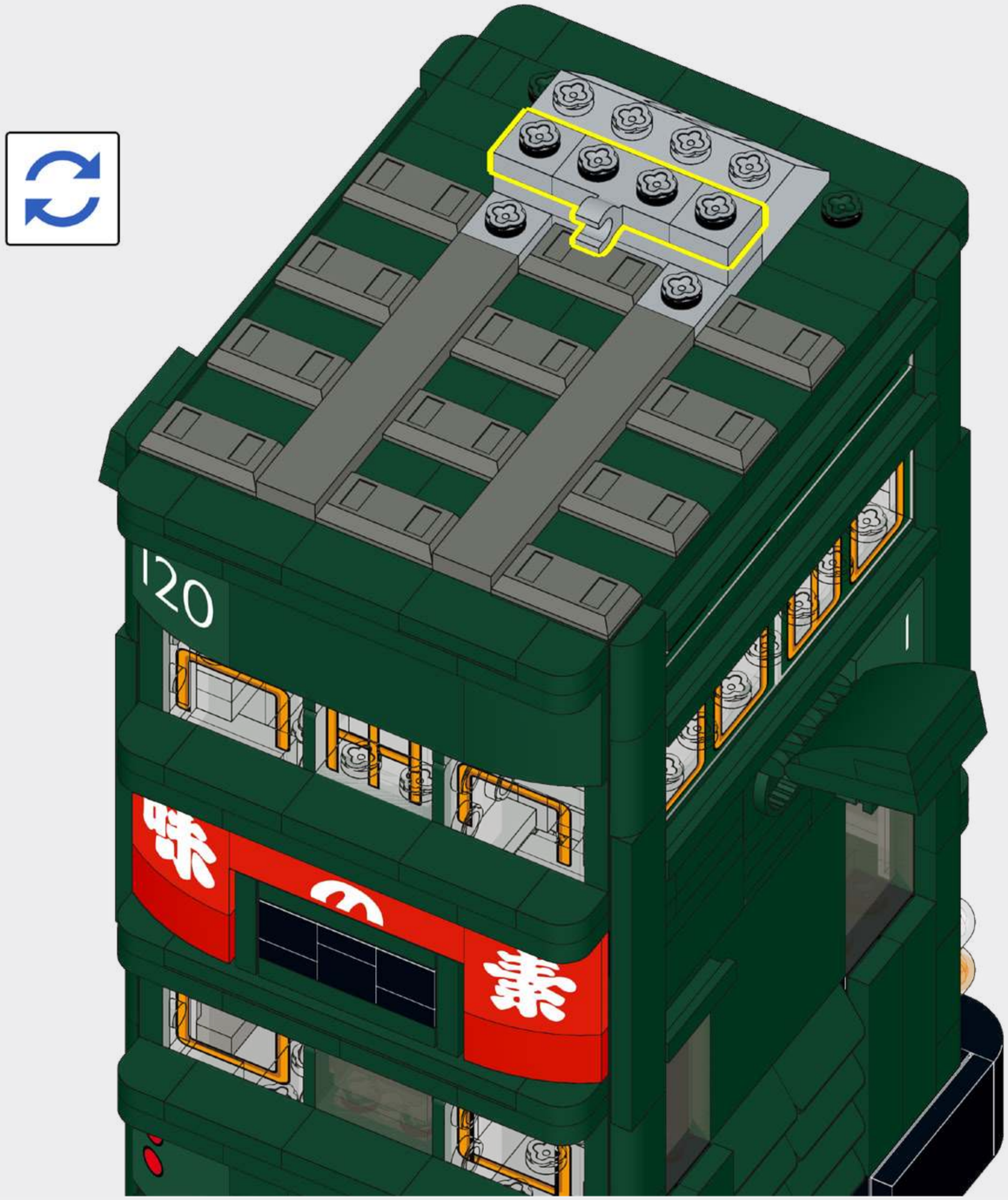

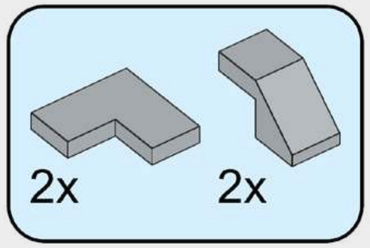

128

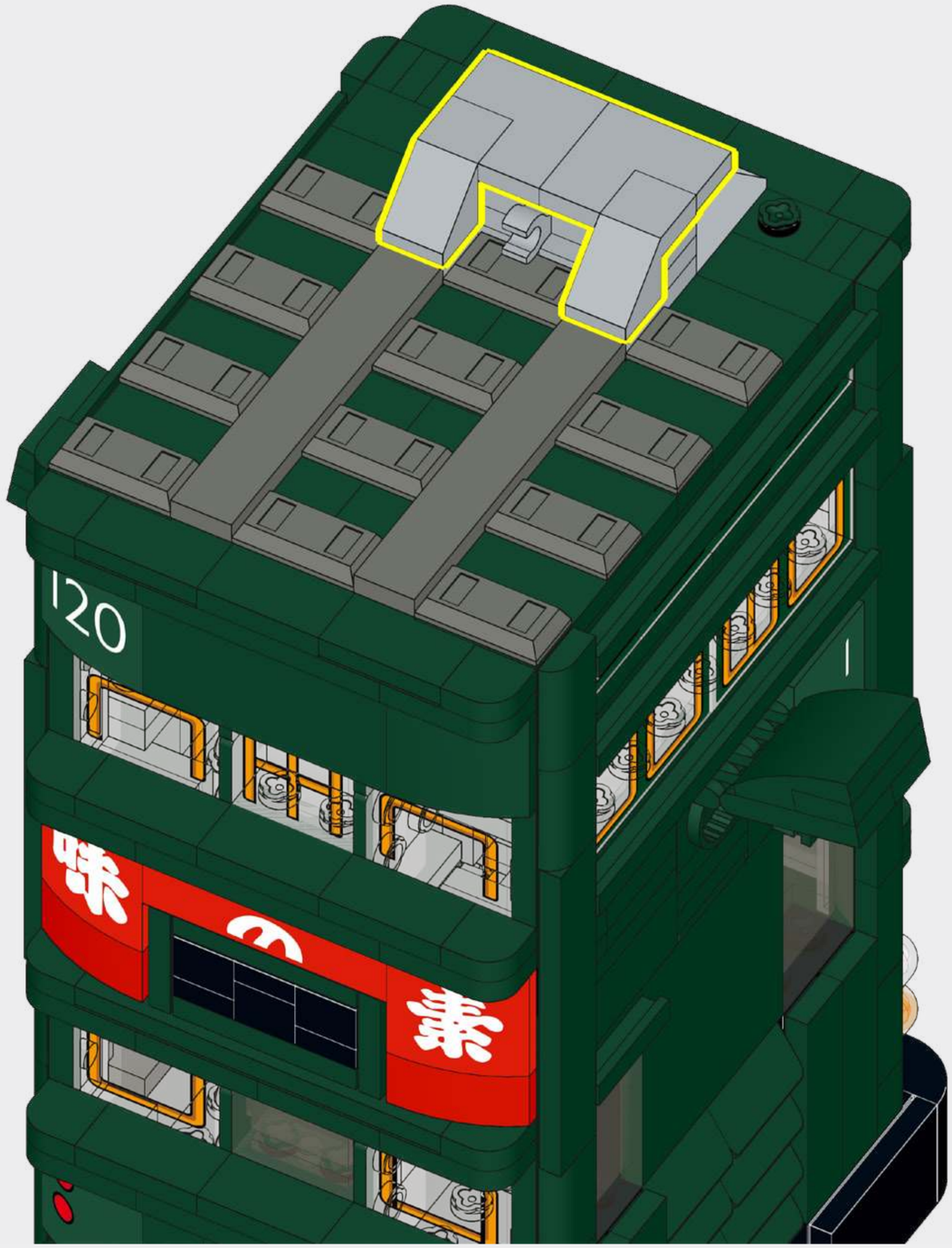

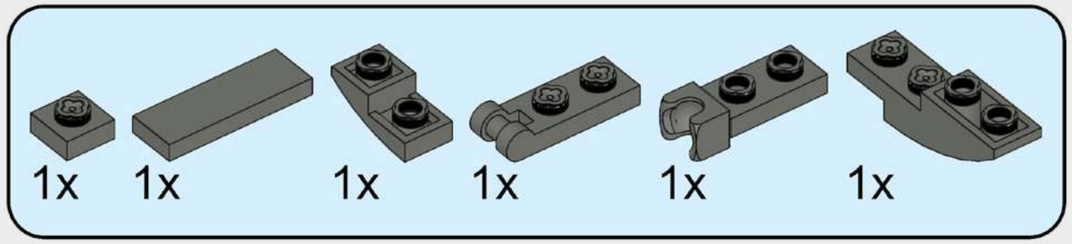

129

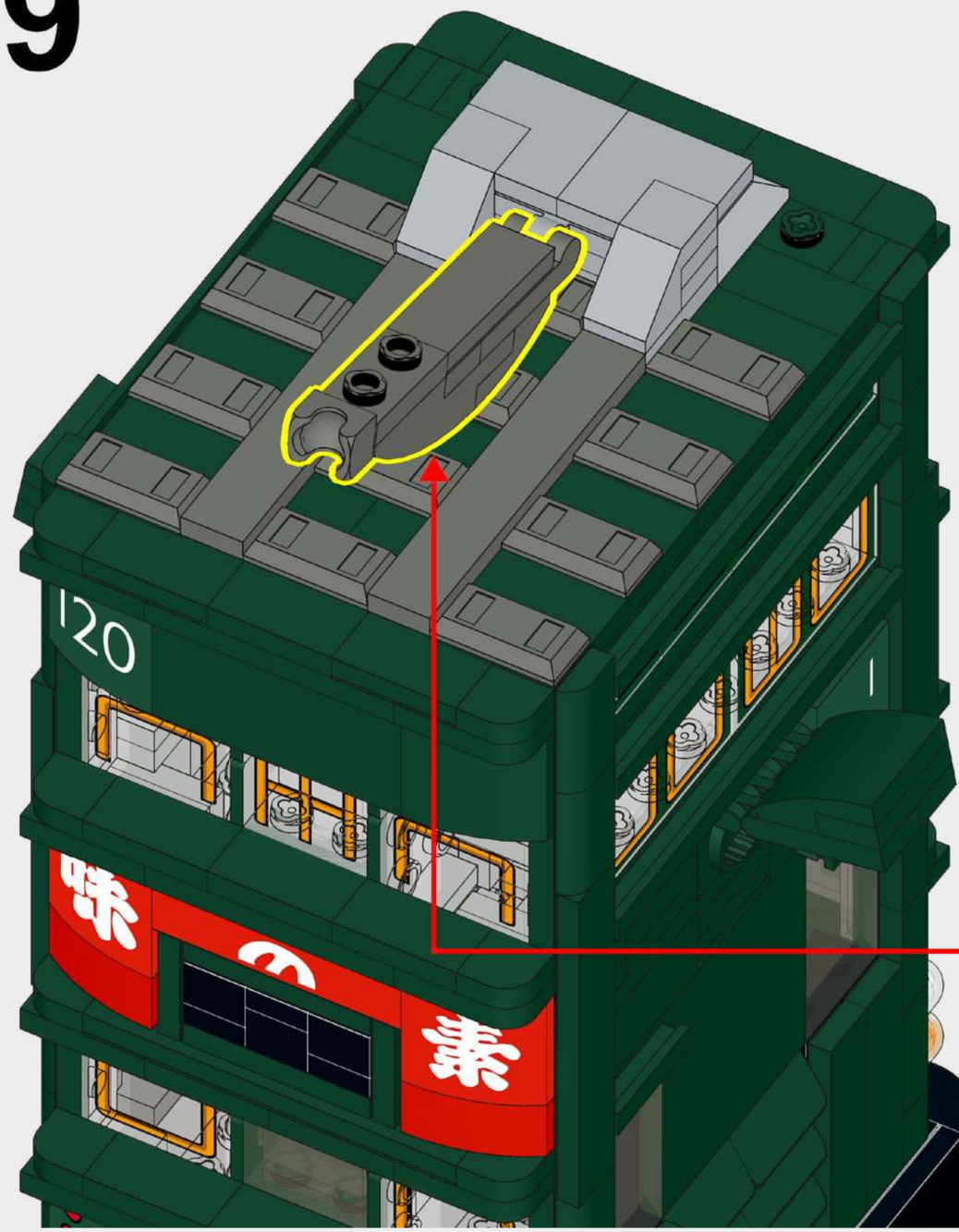

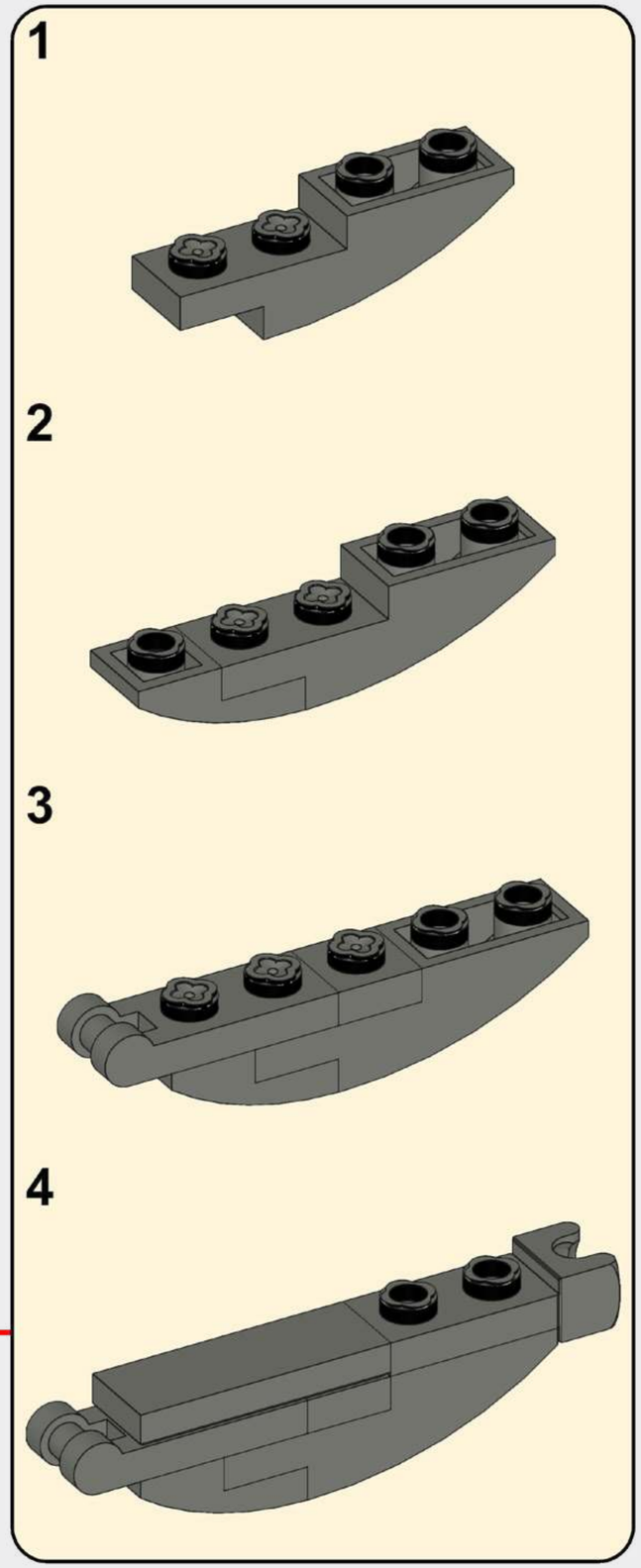

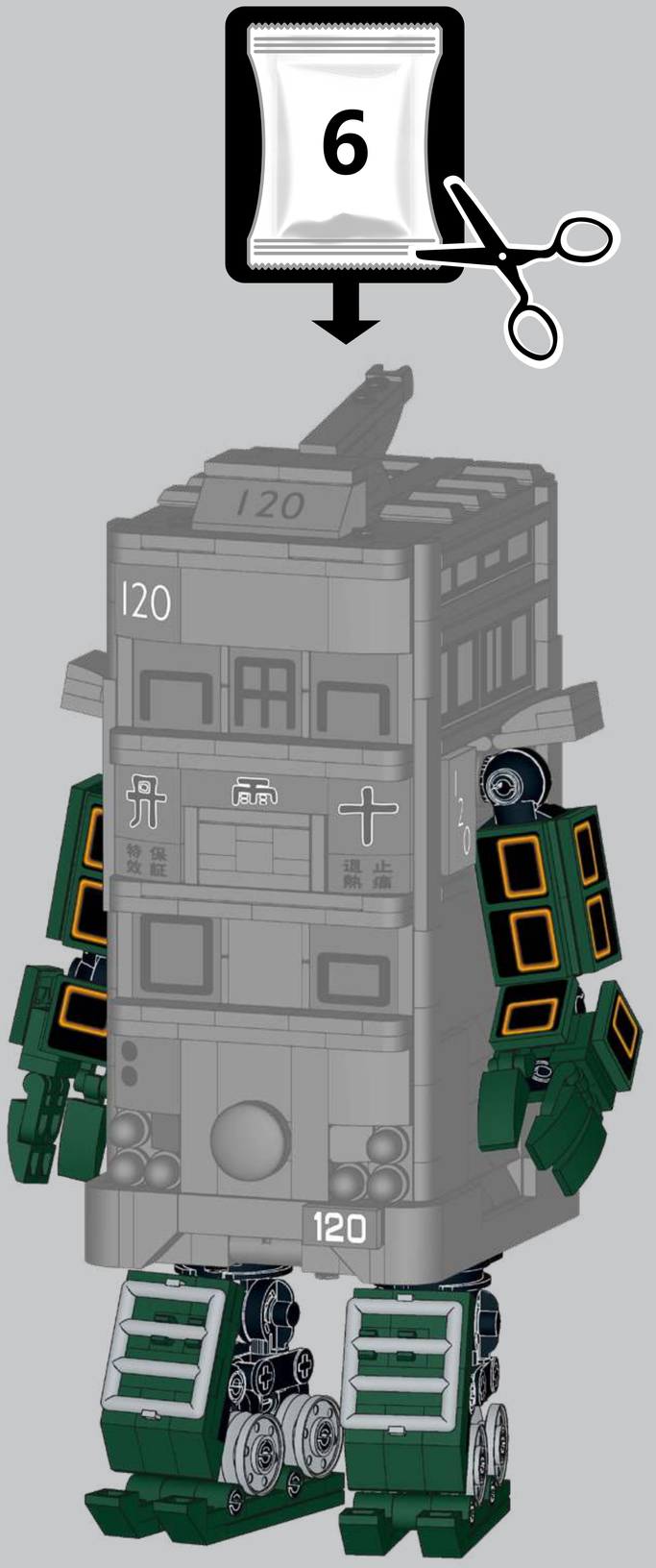
6
120
120
120
120

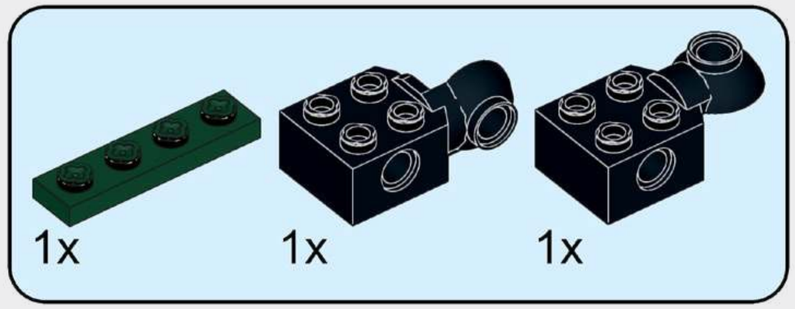

130

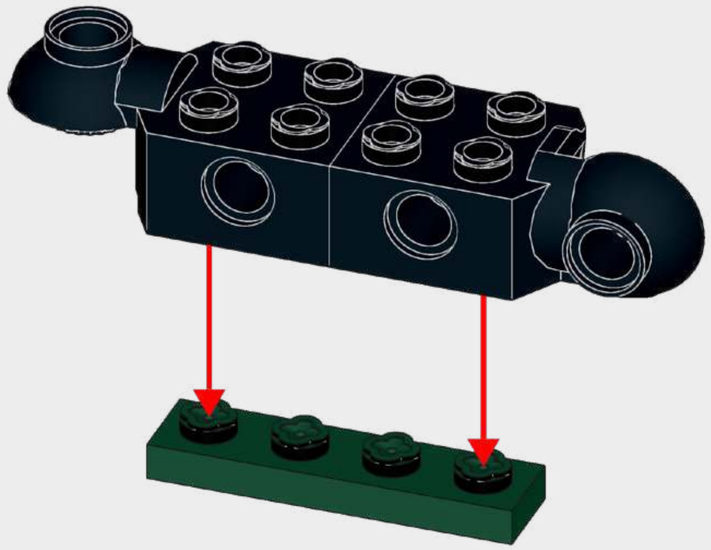

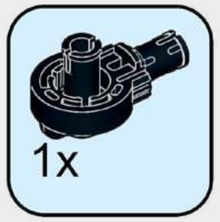

131

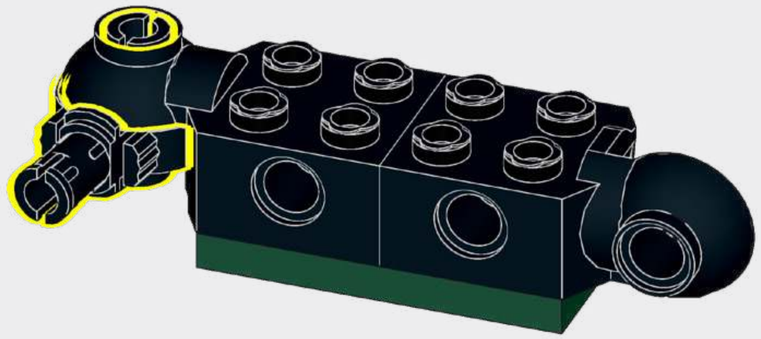

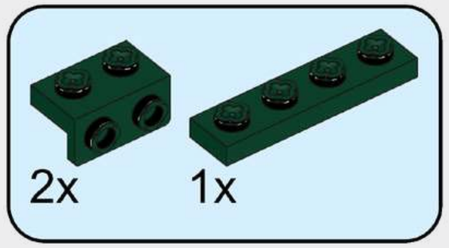

132

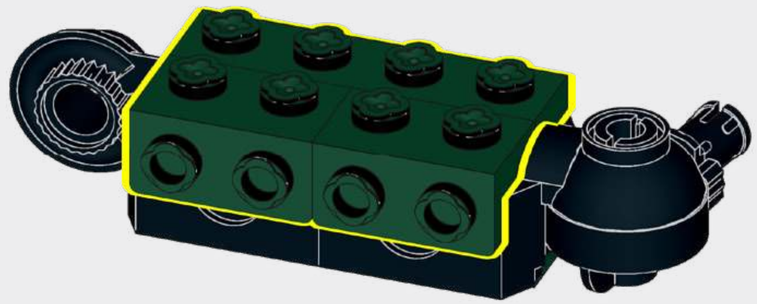

133

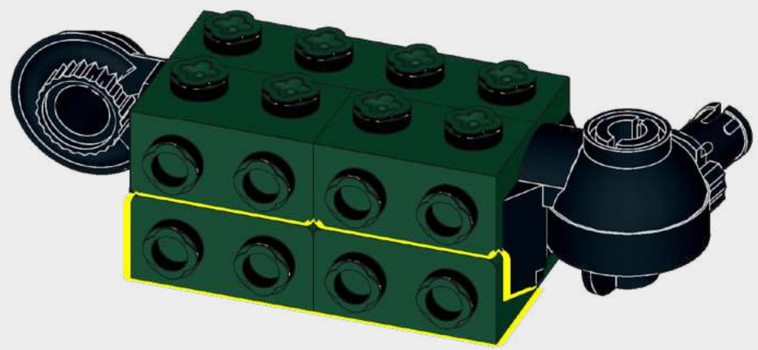

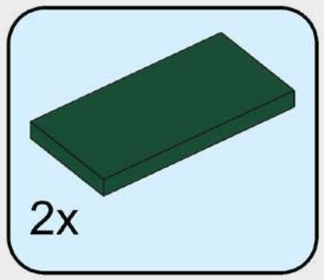

134

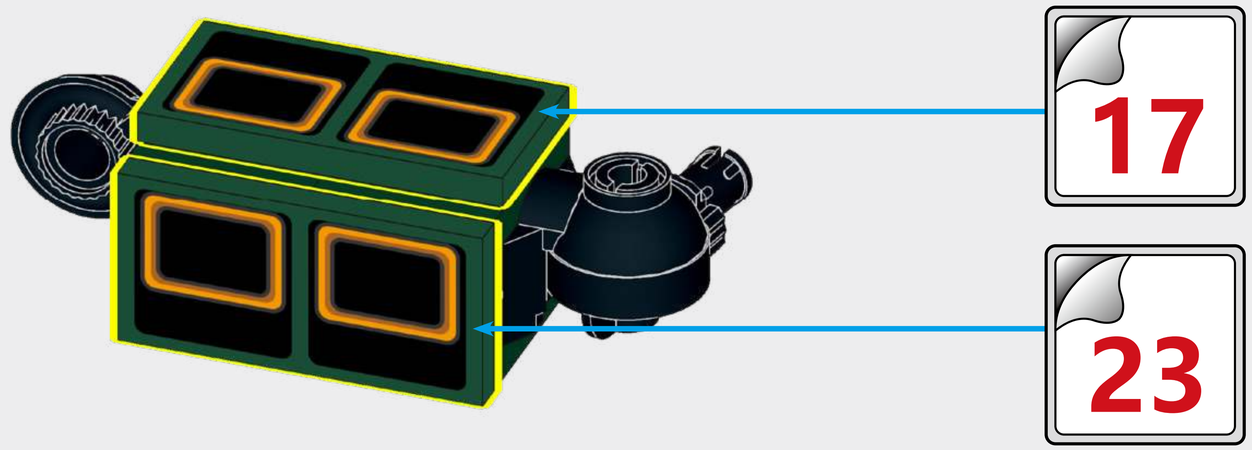

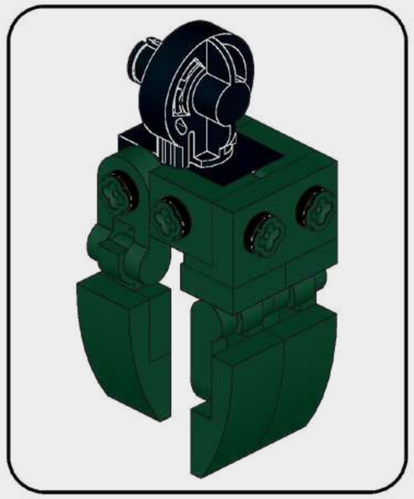

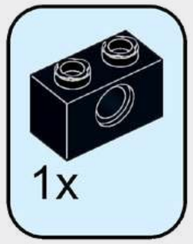

135

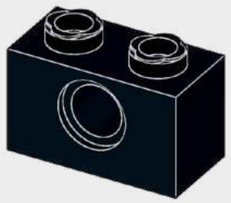

136

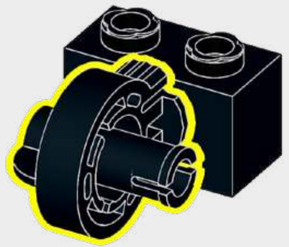

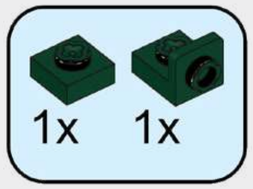

137

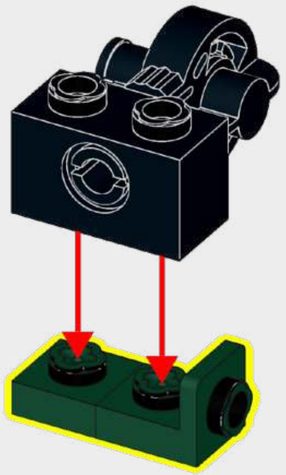

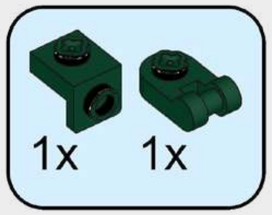

138

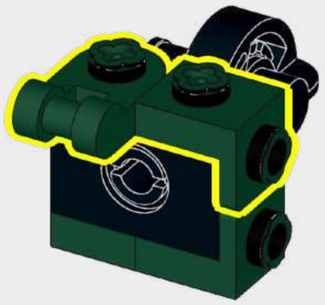

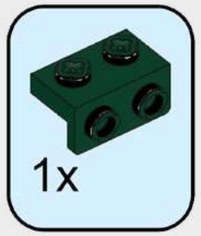

139

140

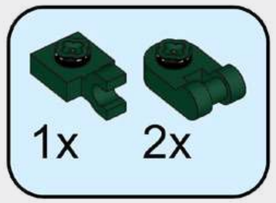

141

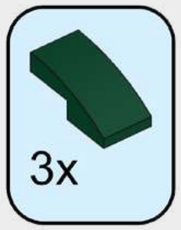

142

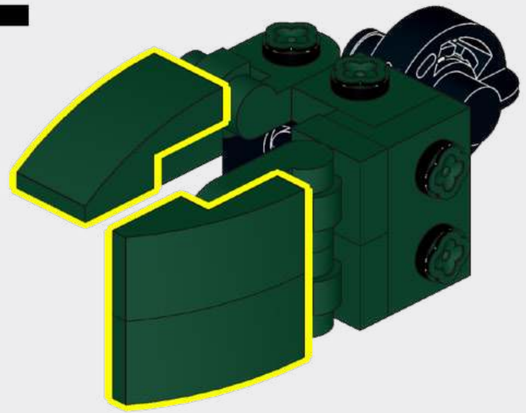

143

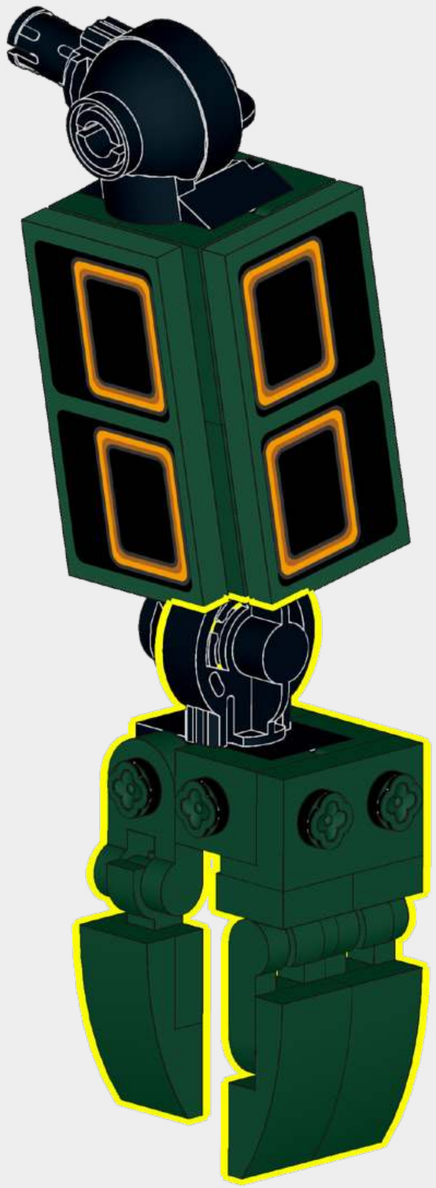

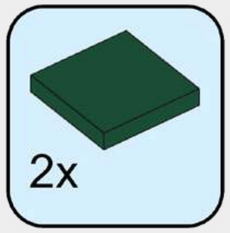

144

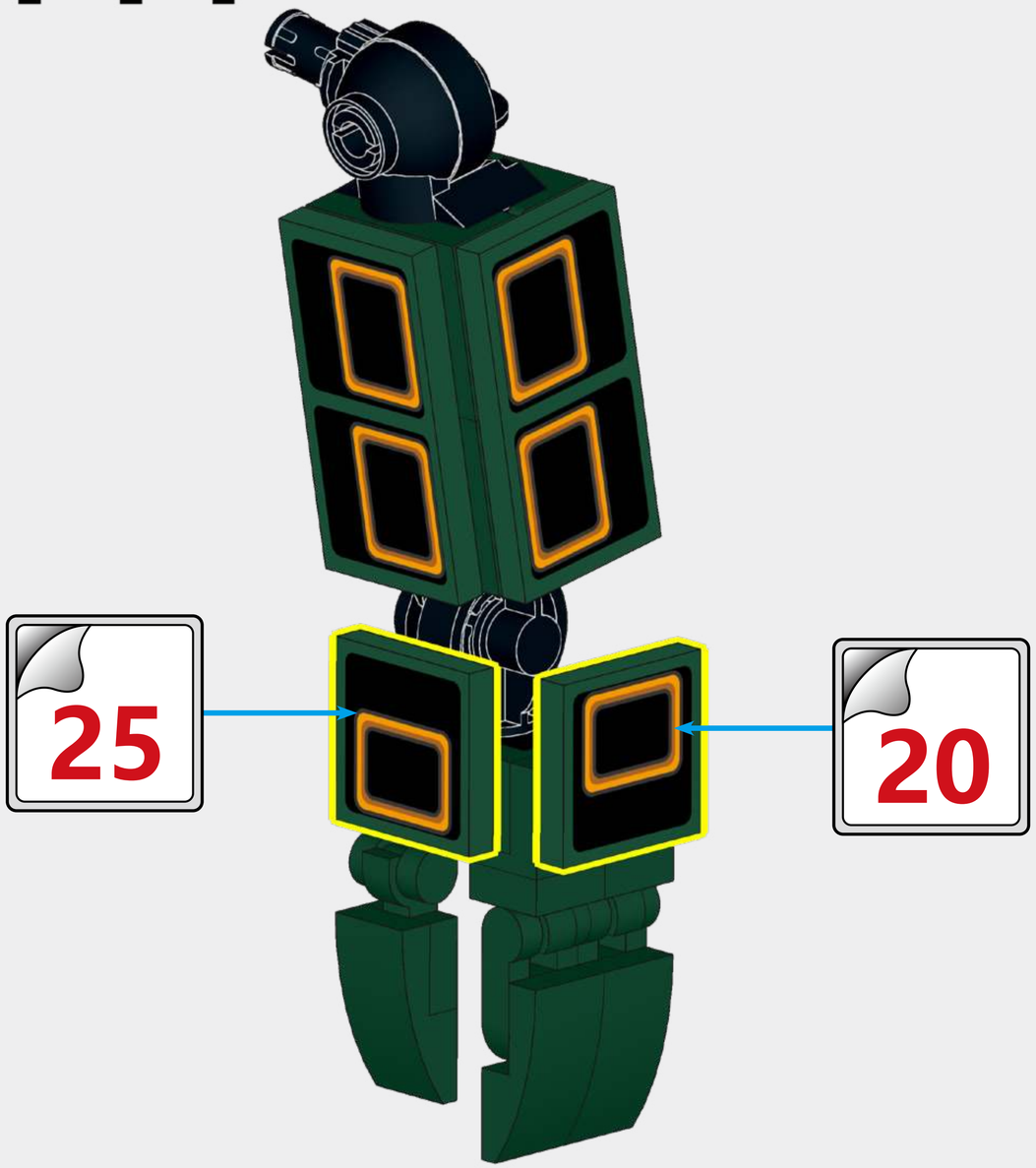

145

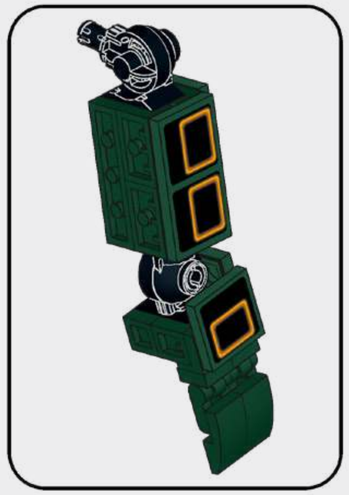

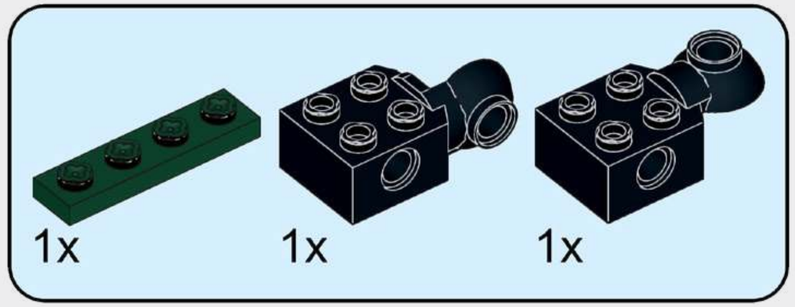

146

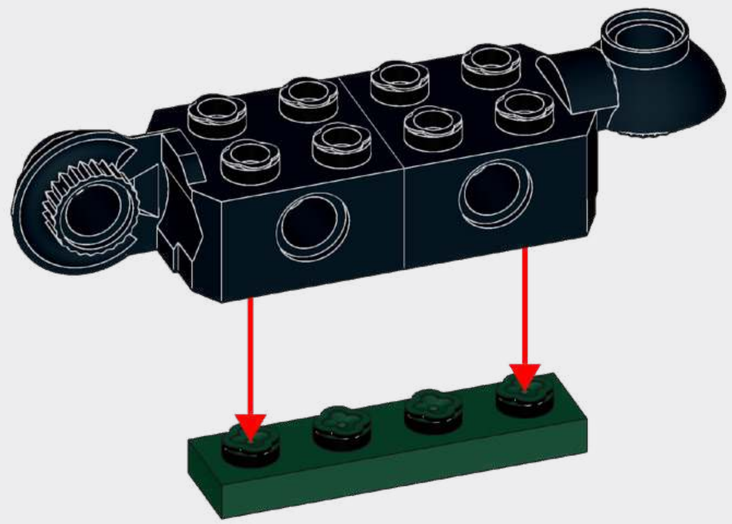

147

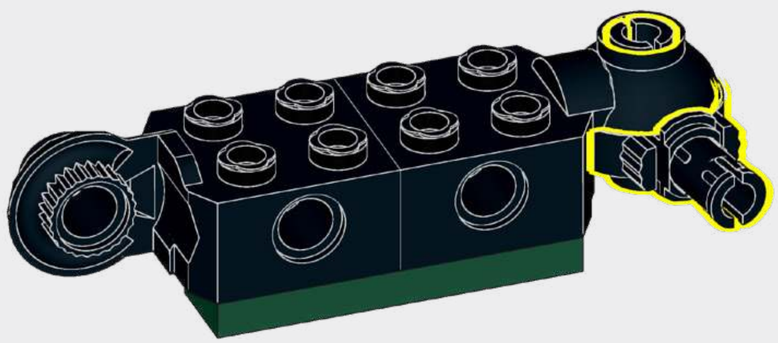

148

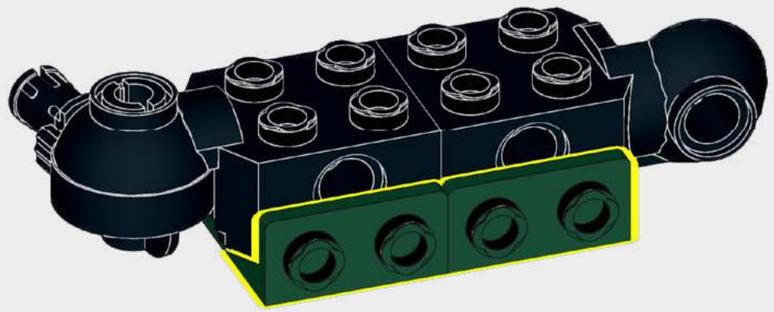

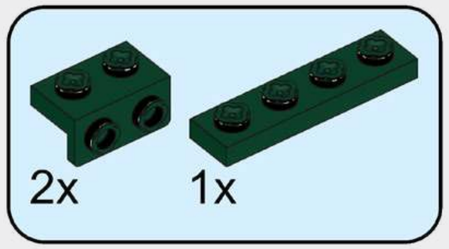

149

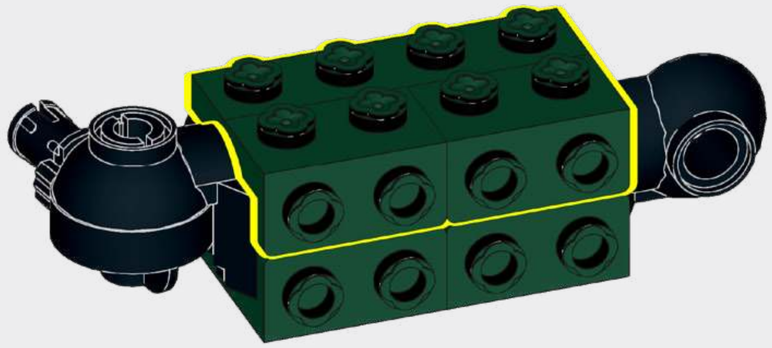

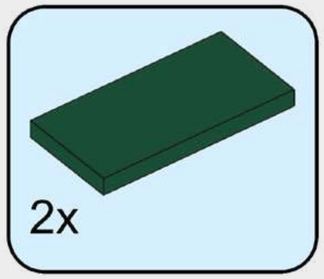

150

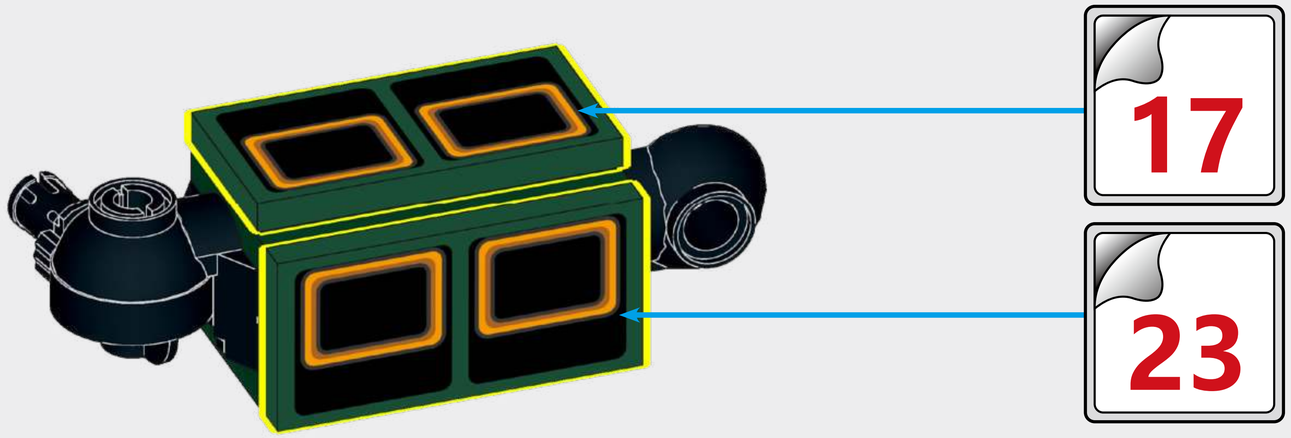

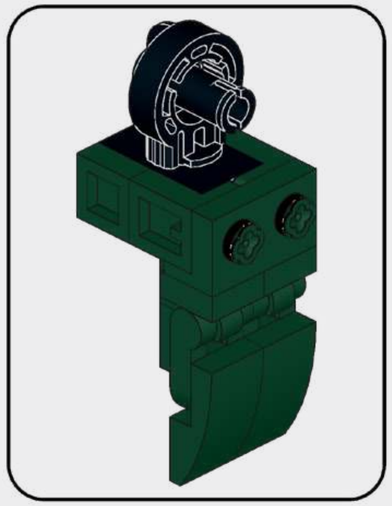

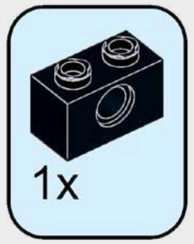

151

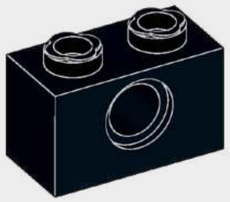

152

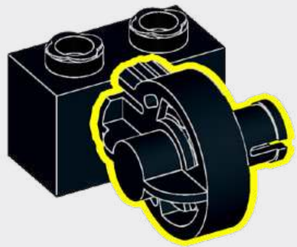

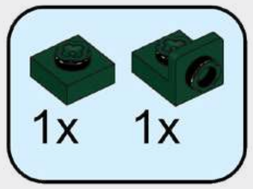

153

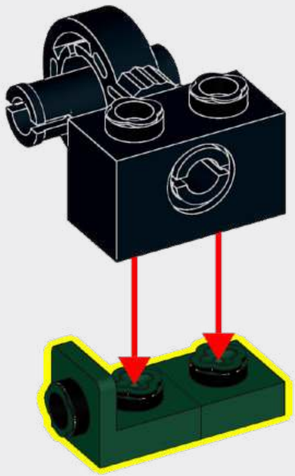

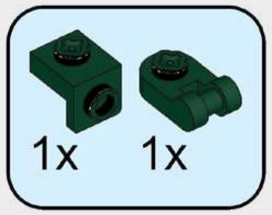

154

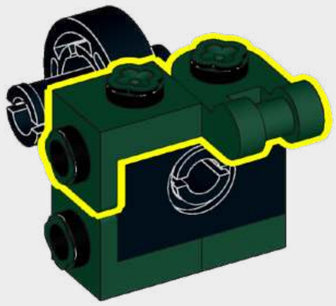

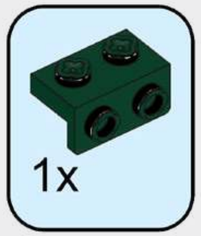

155

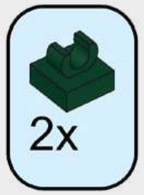

156

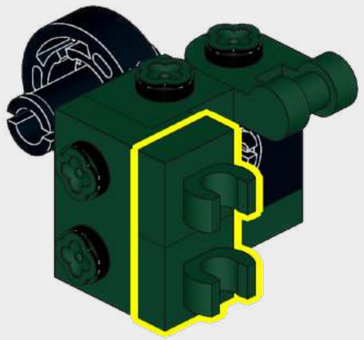

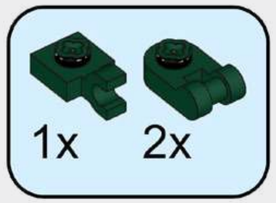

157

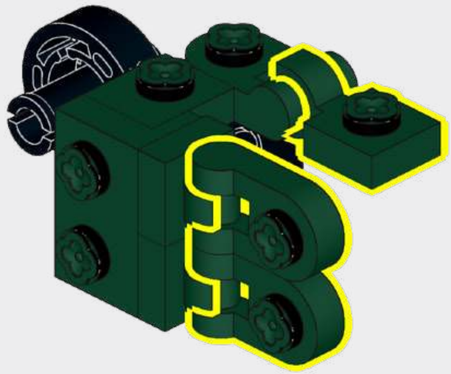

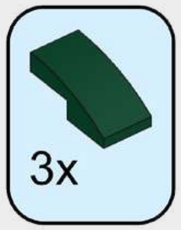

158

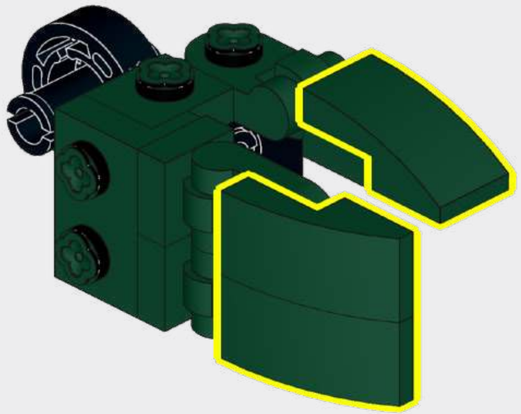

159

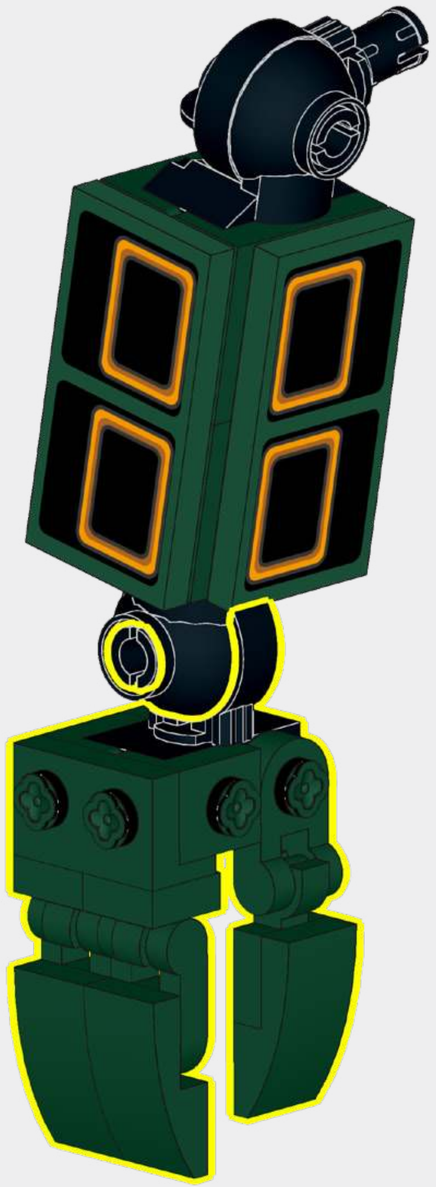

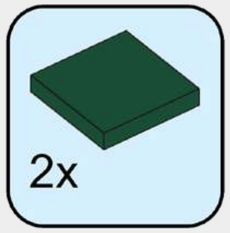

160

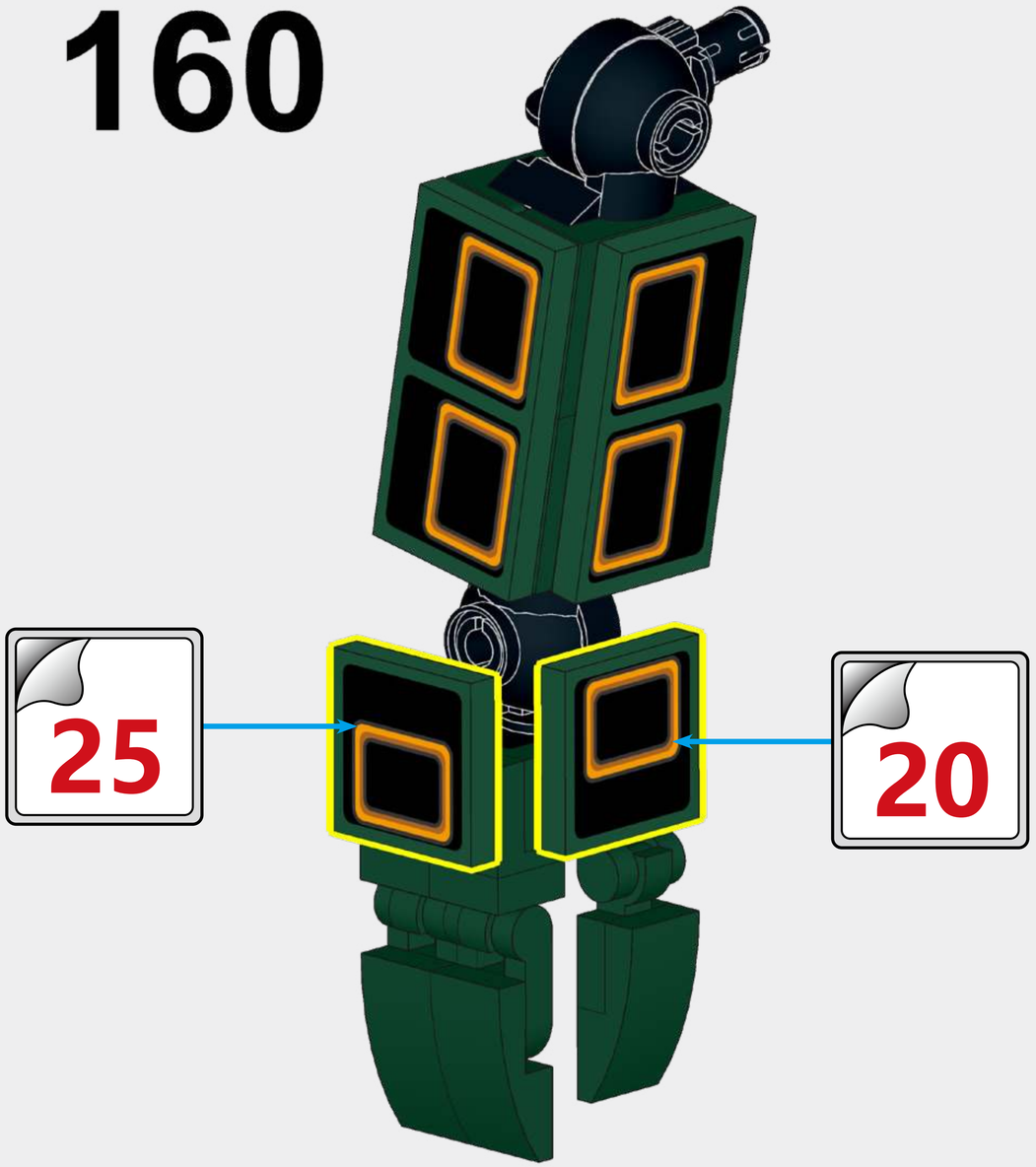

161

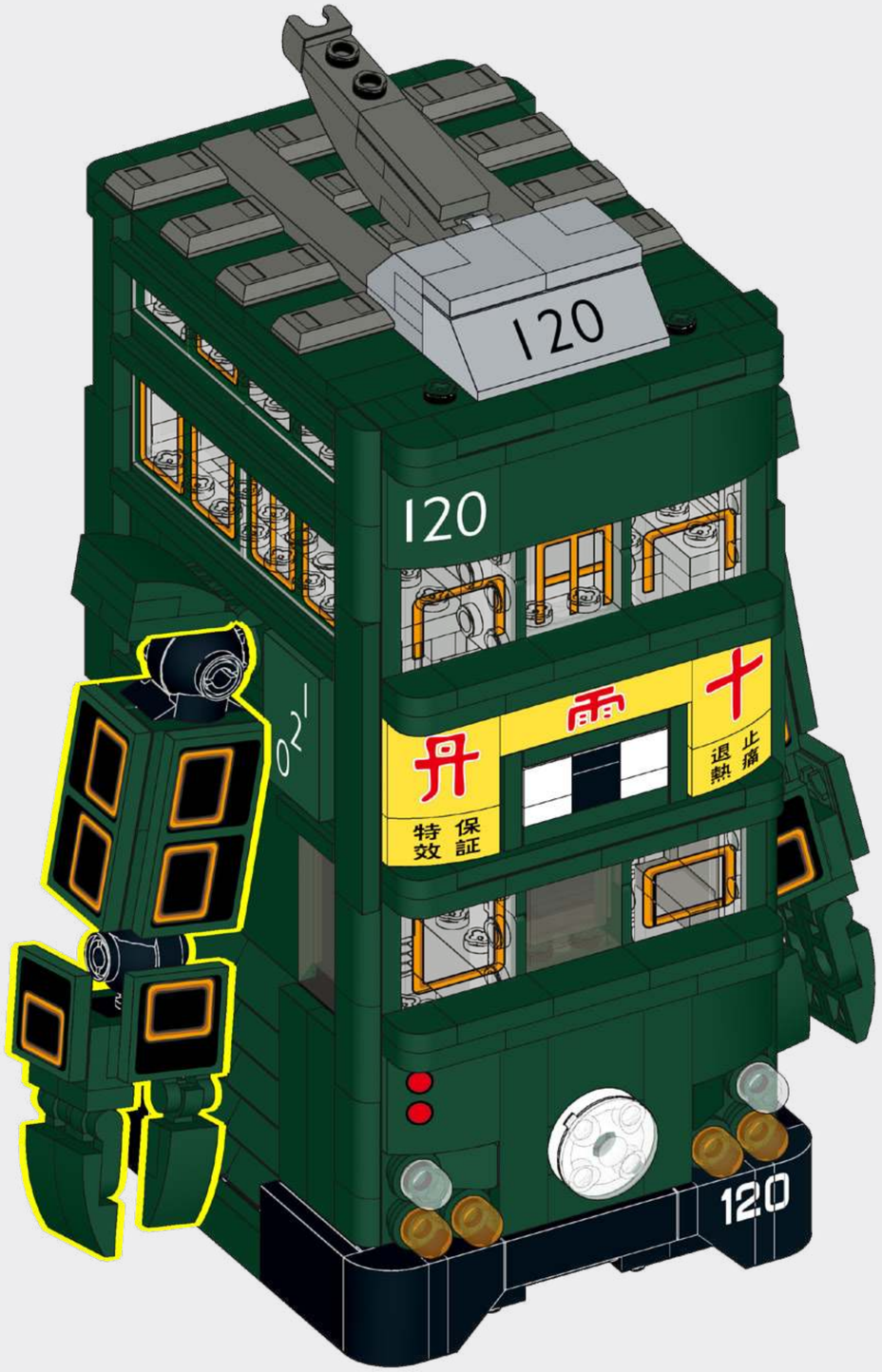

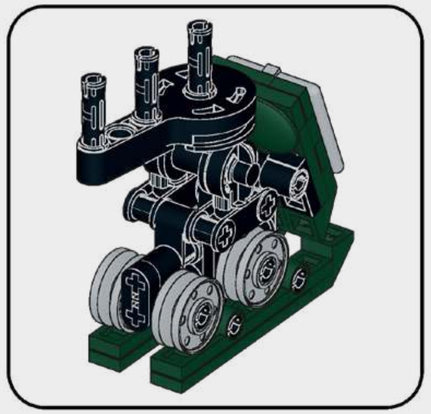

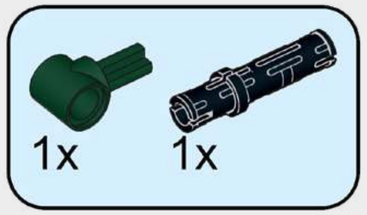

162

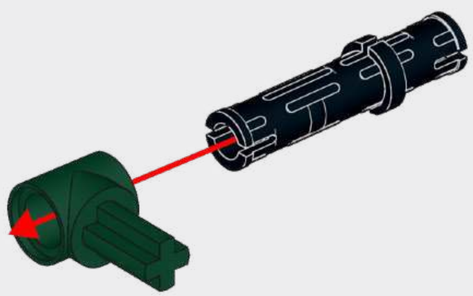

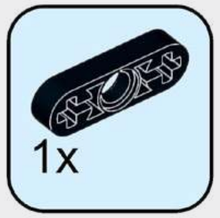

163

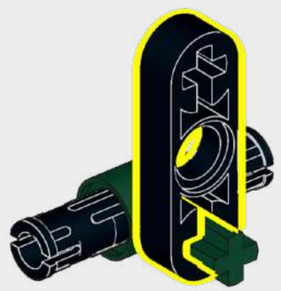

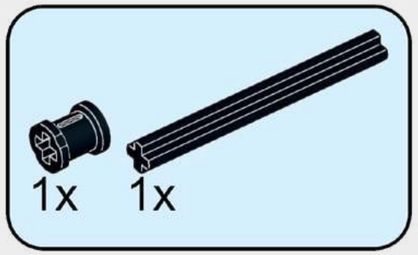

164

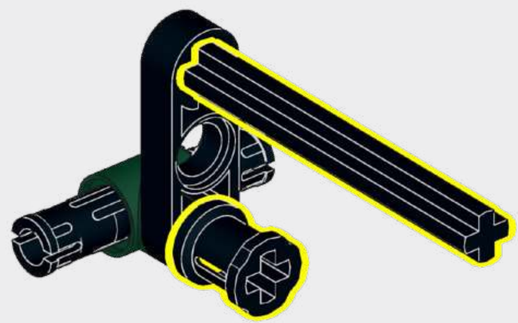

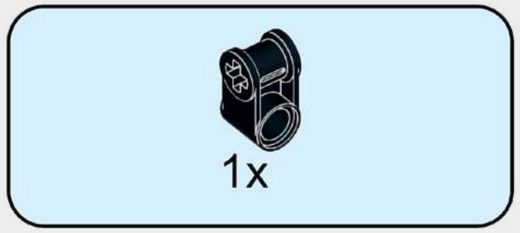

165

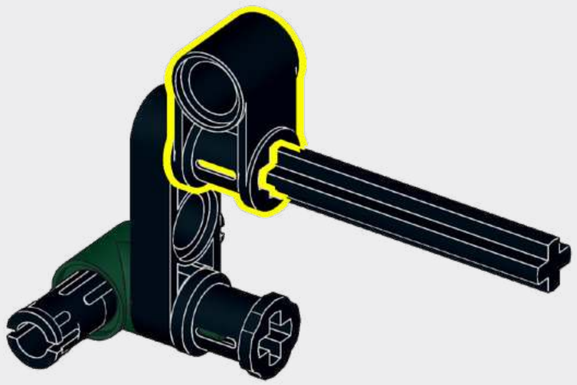

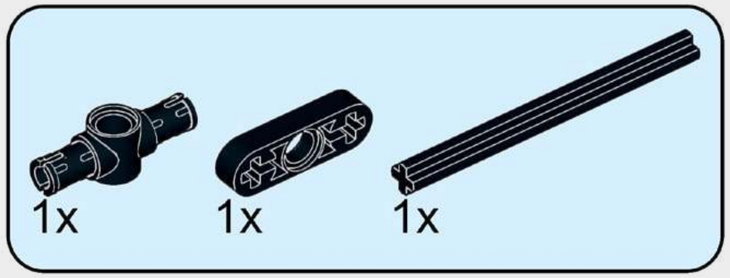

166

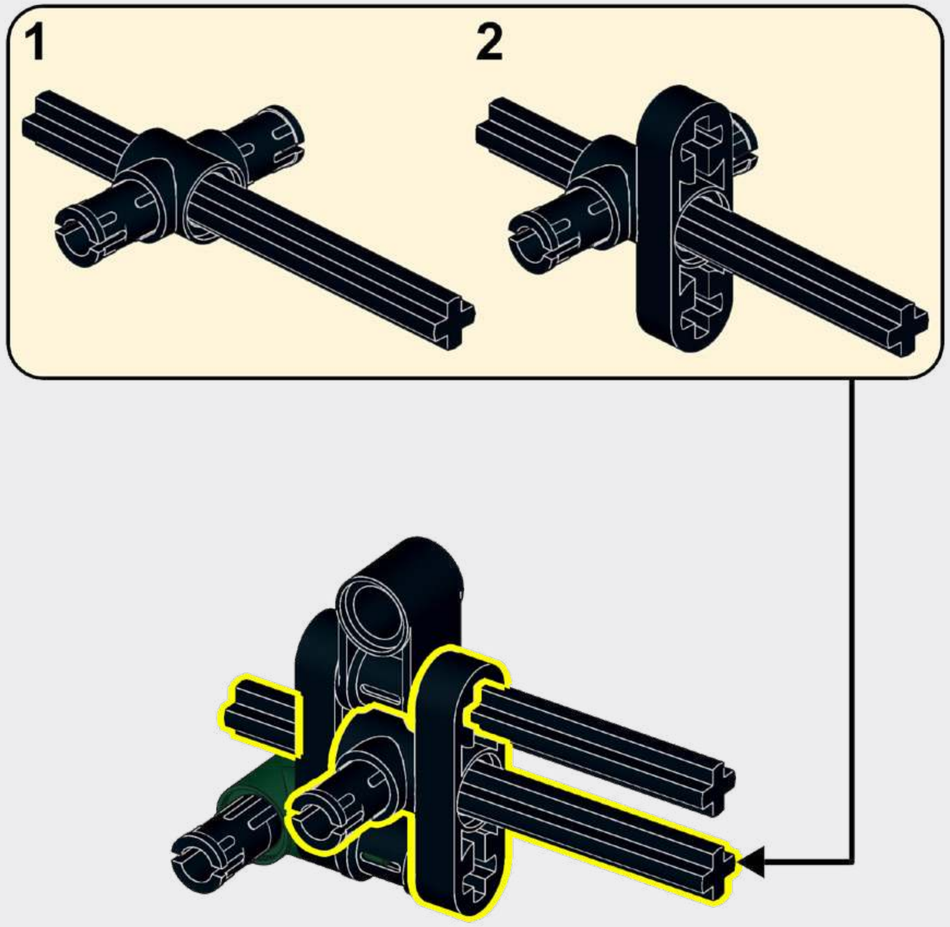

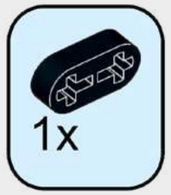

167

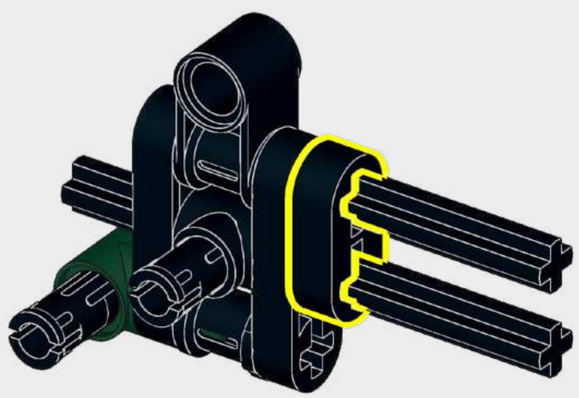

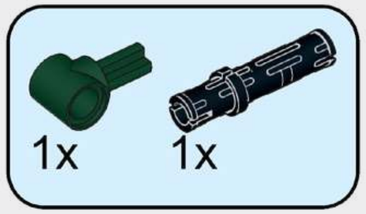

168

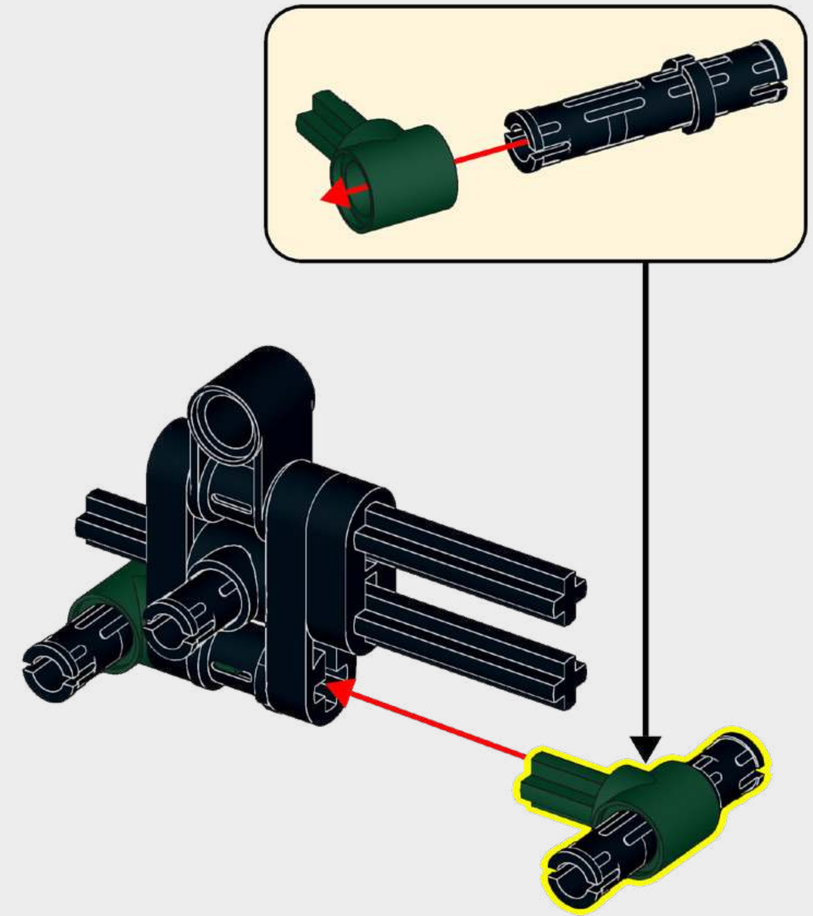

169

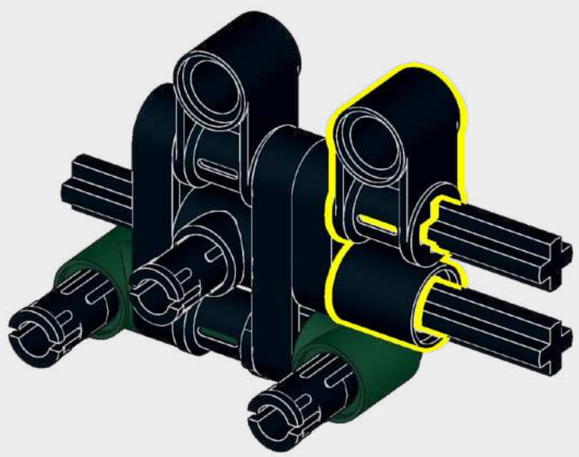

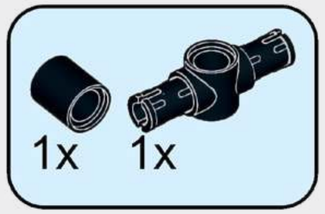

170

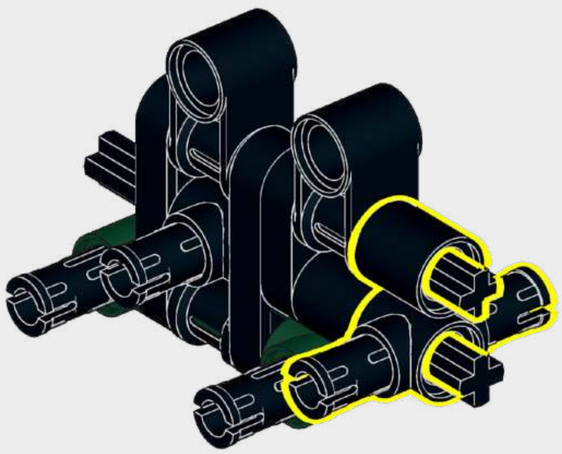

171

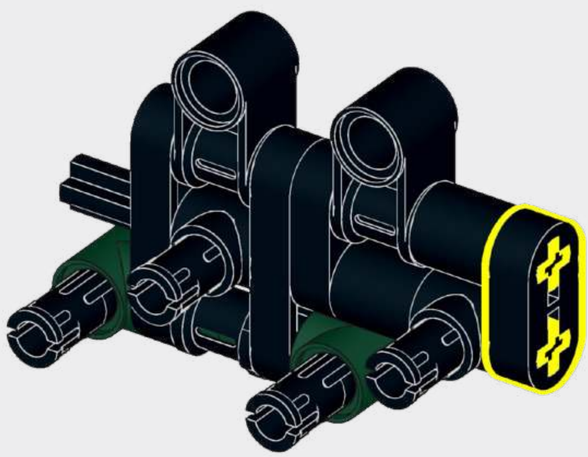

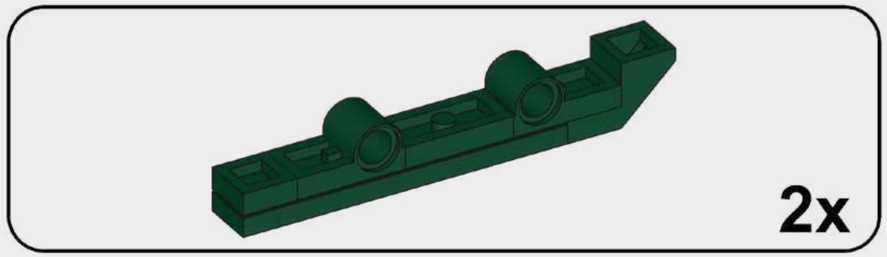

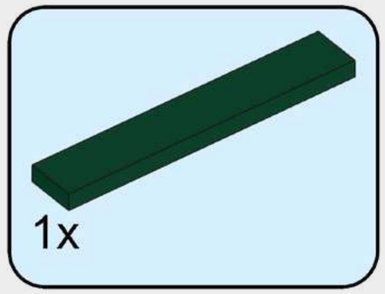

172

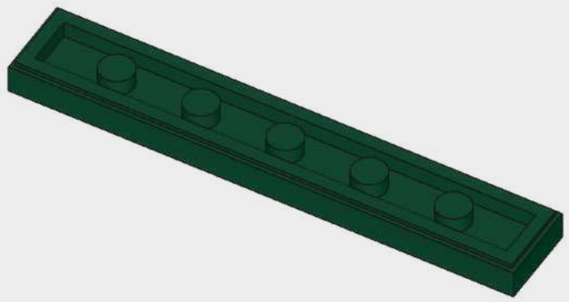

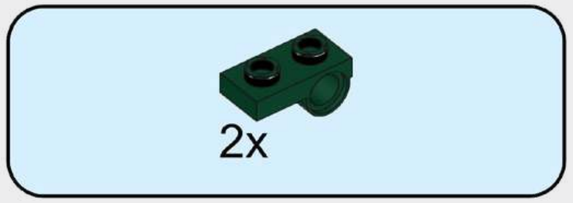

173

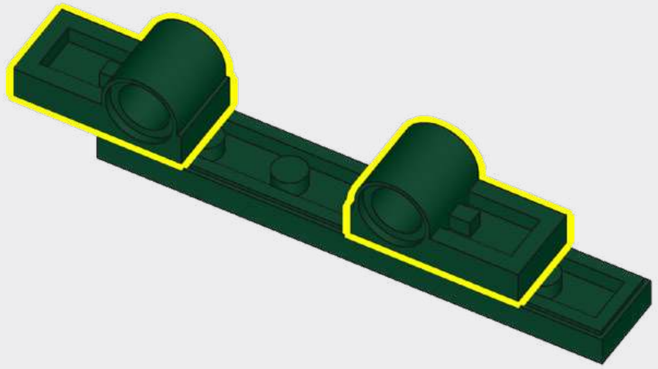

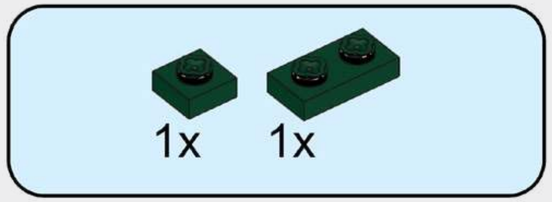

174

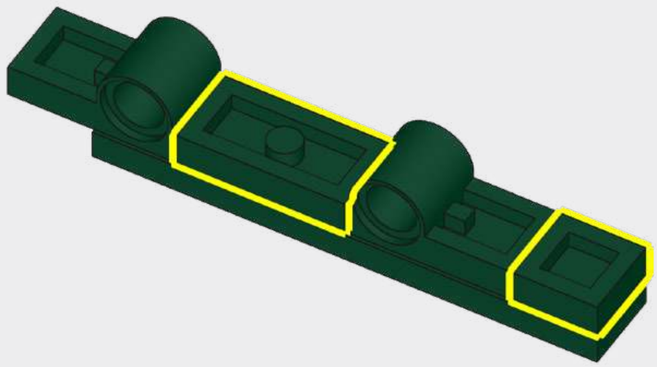

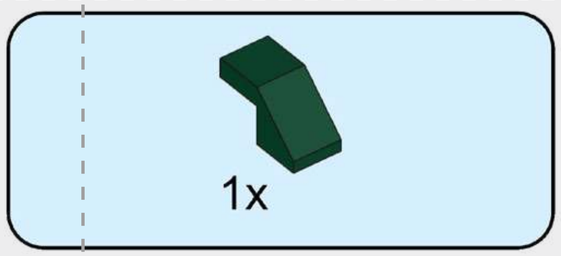

175

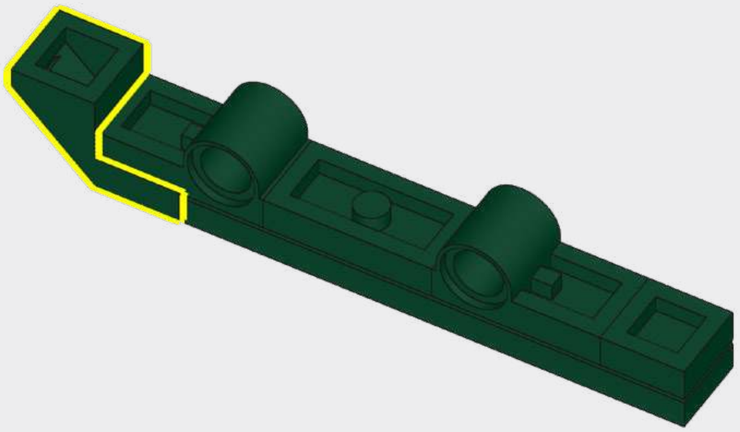

176

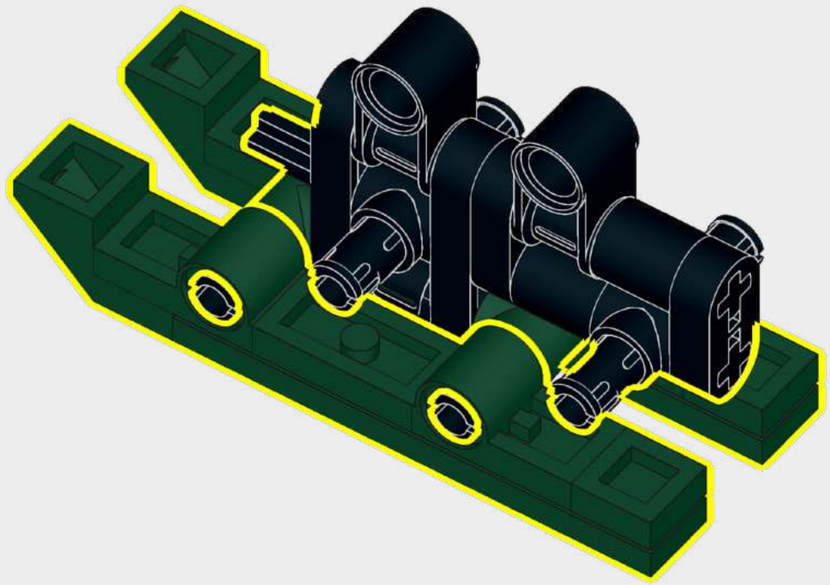

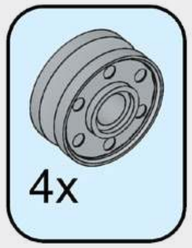

177

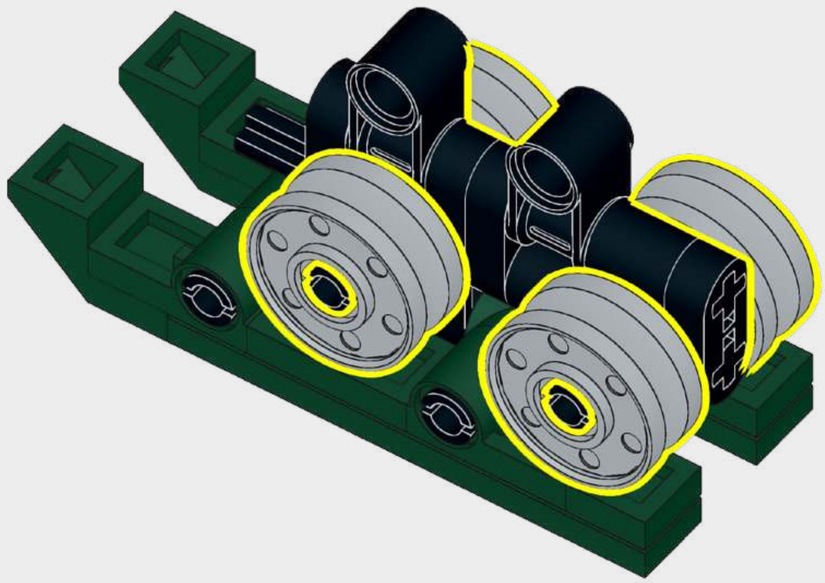

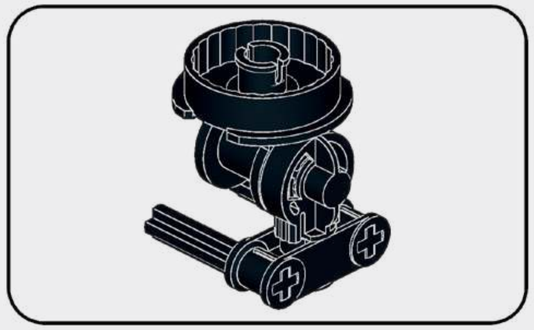

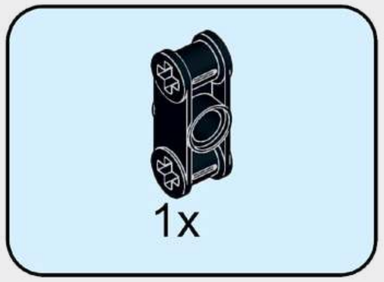

178

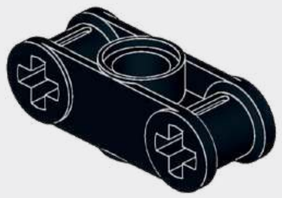

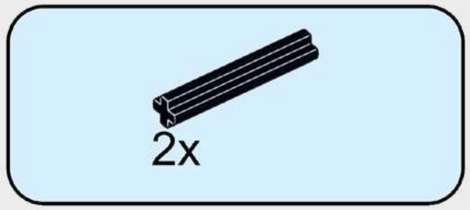

179

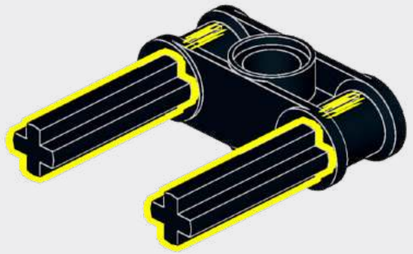

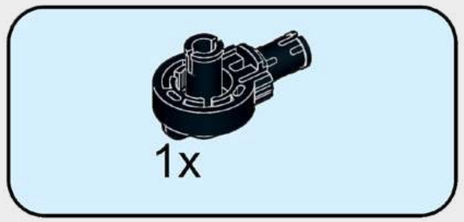

180

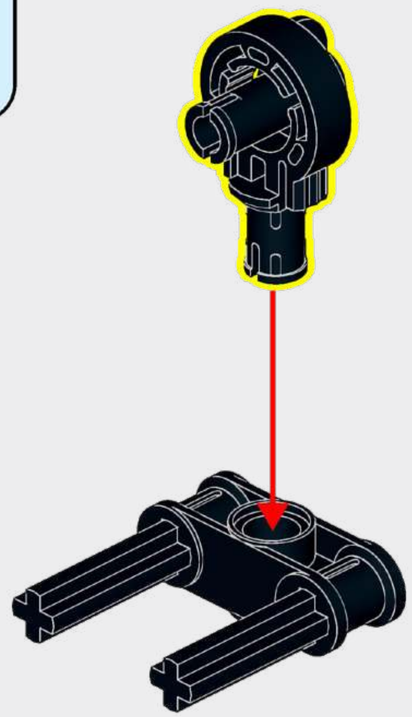

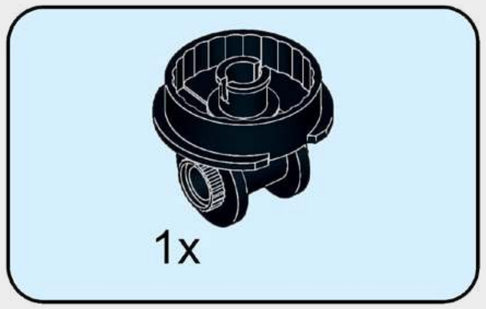

181

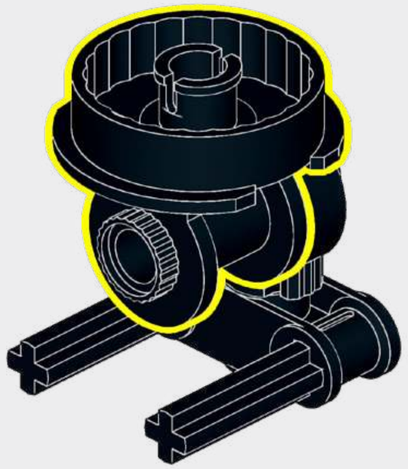

182

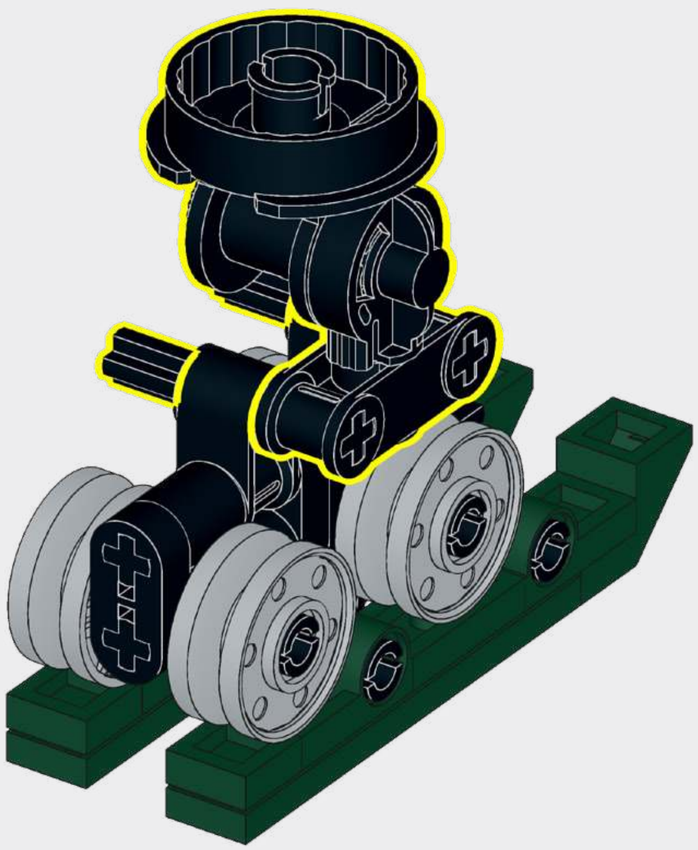

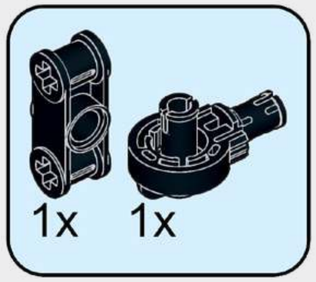

183

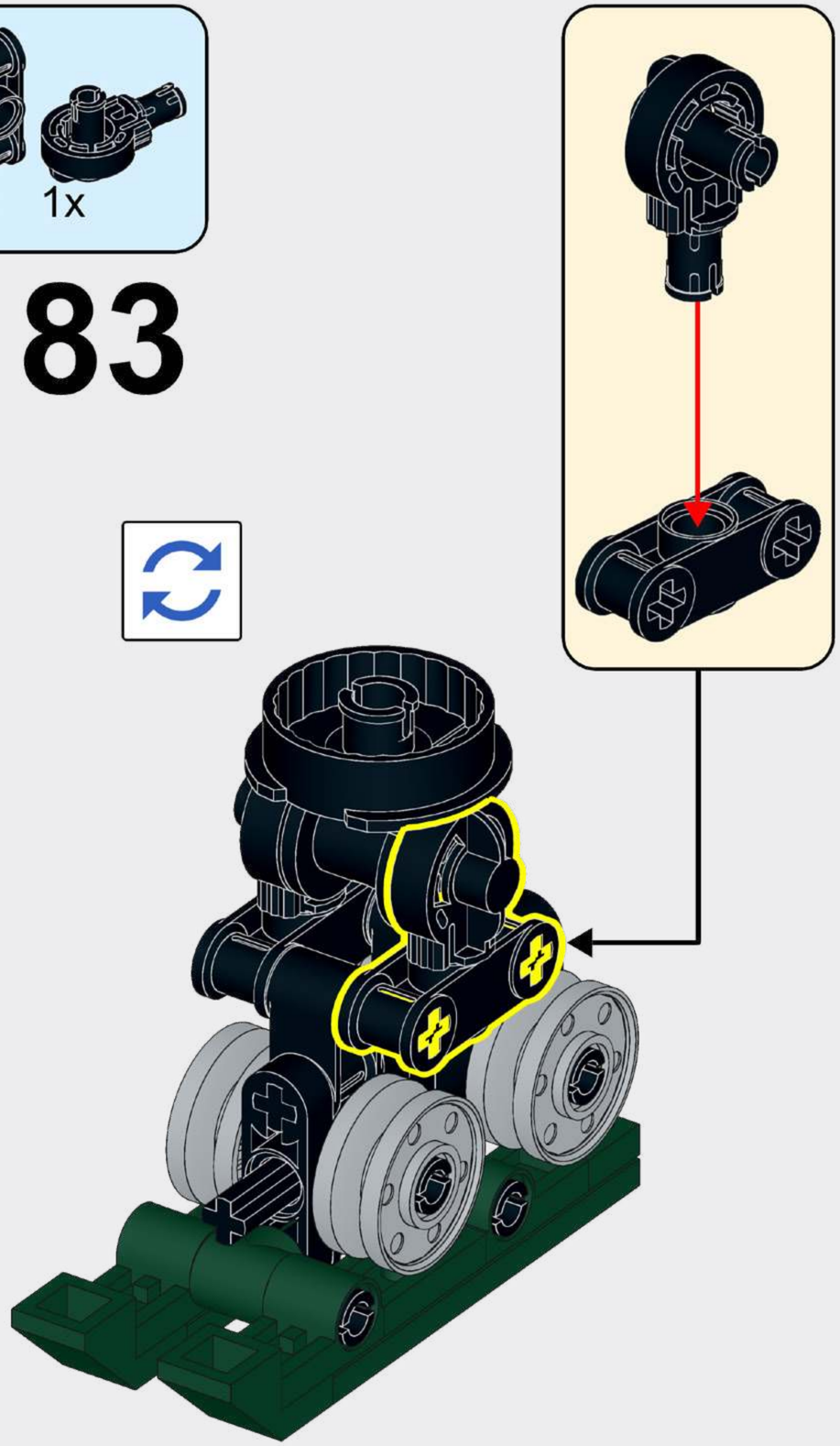

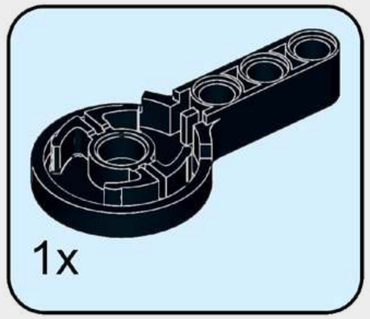

184

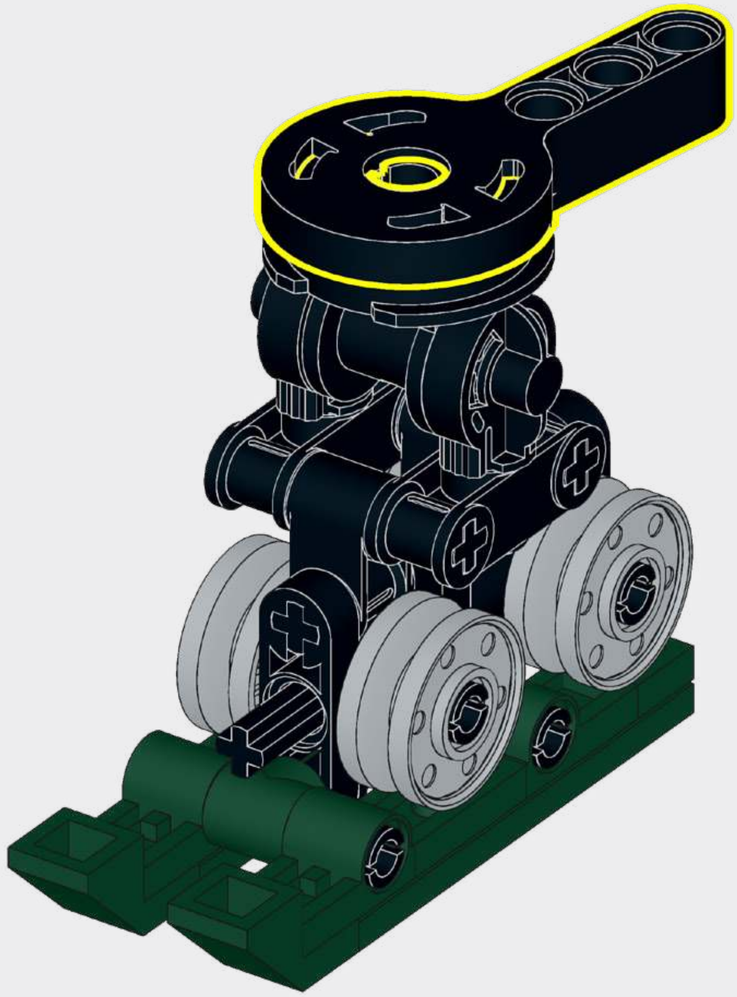

185

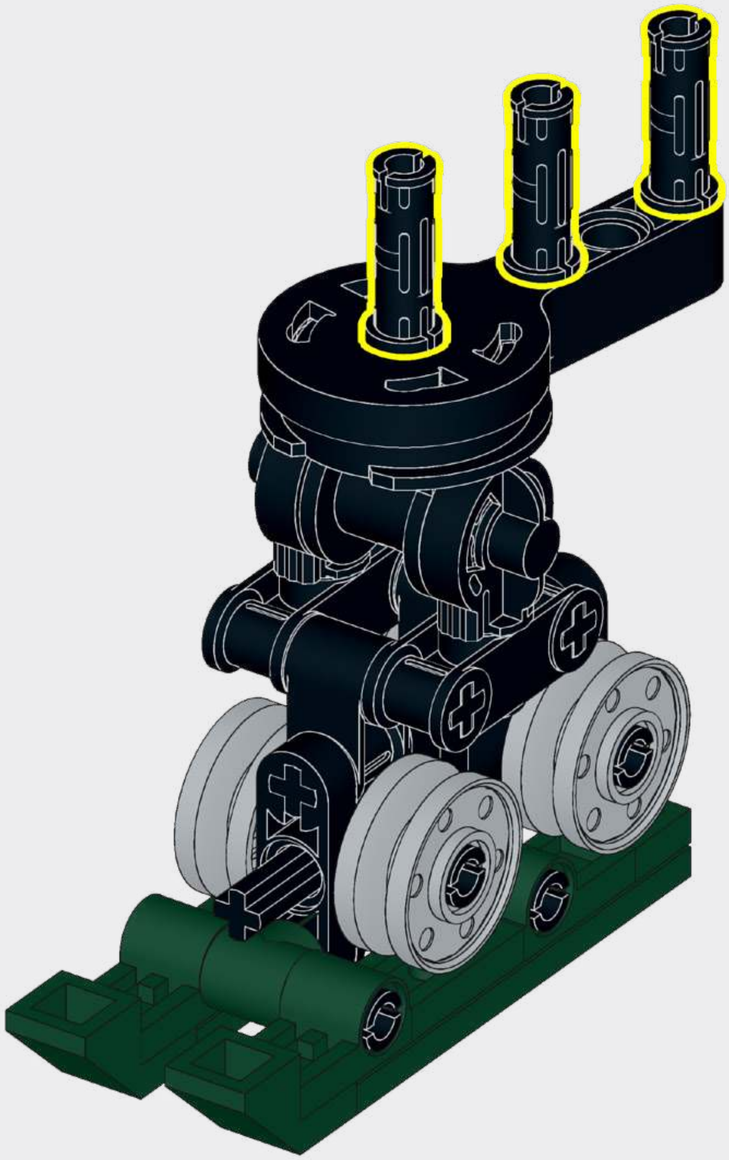

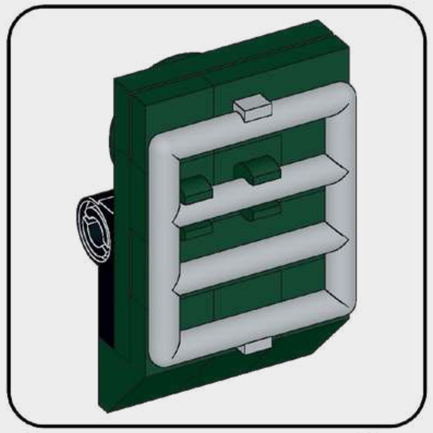

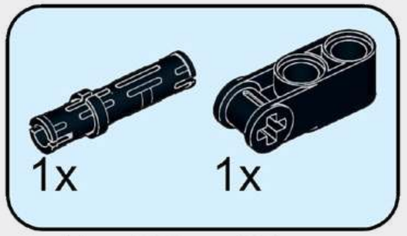

186

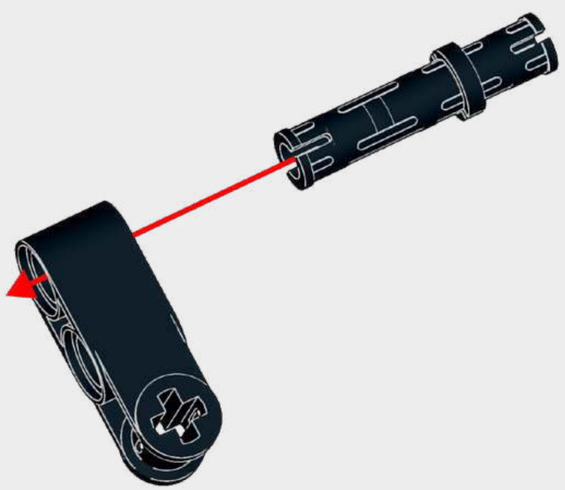

187

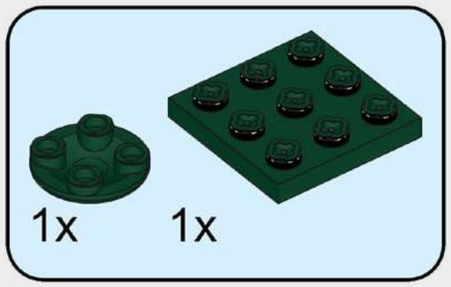

188

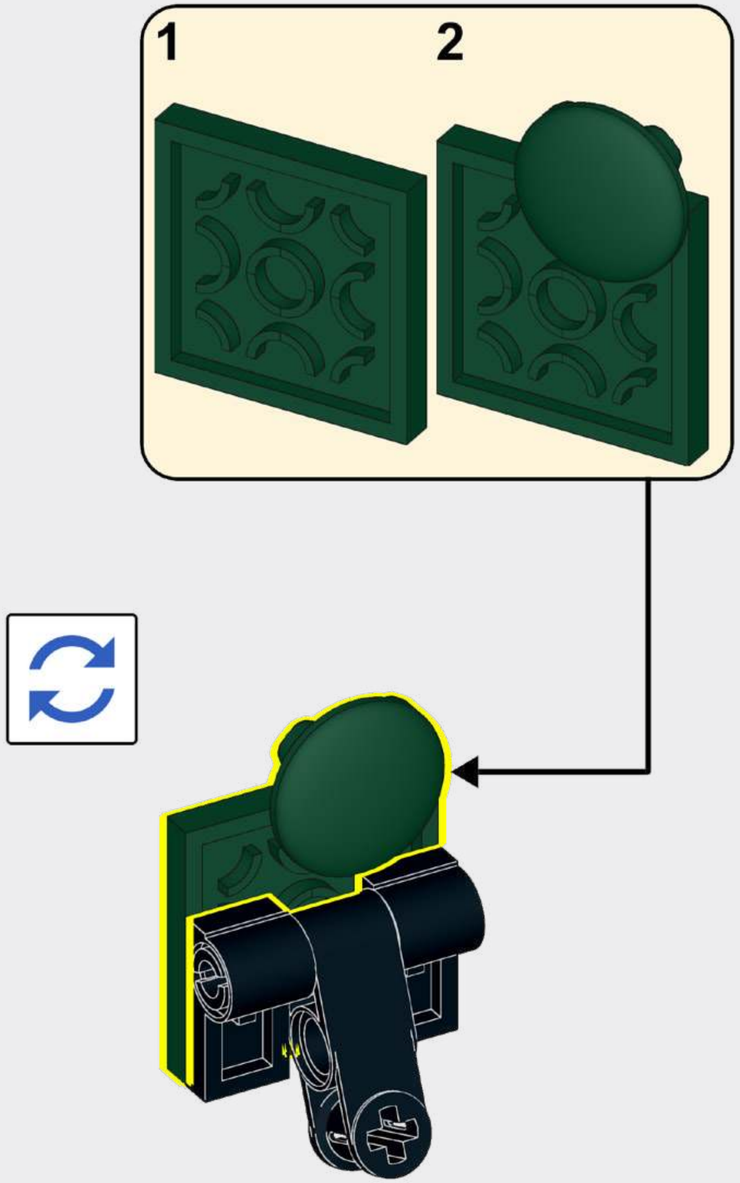

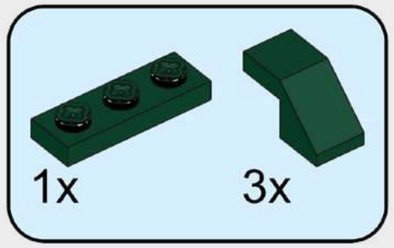

189

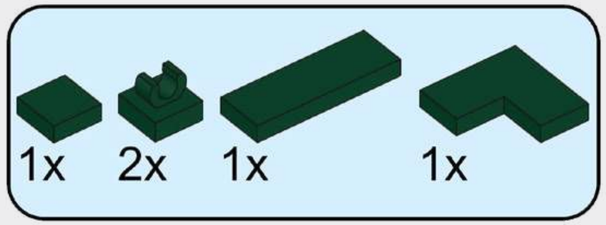

190

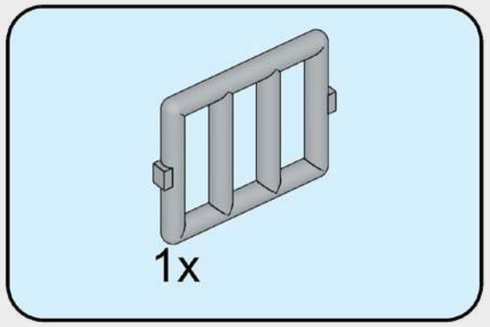

191

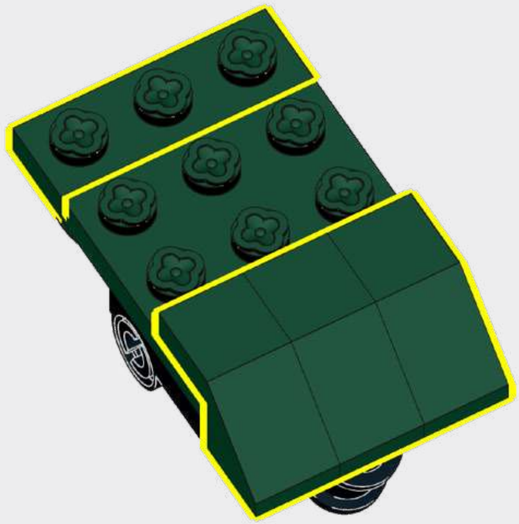

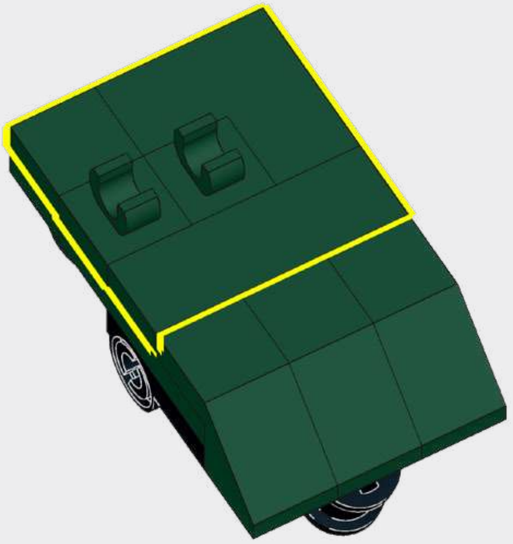

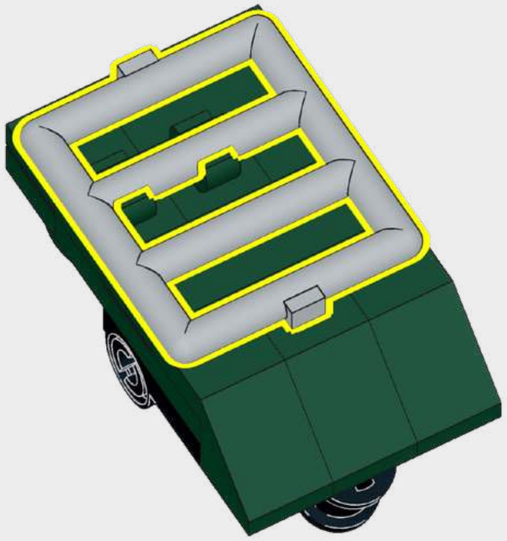

192

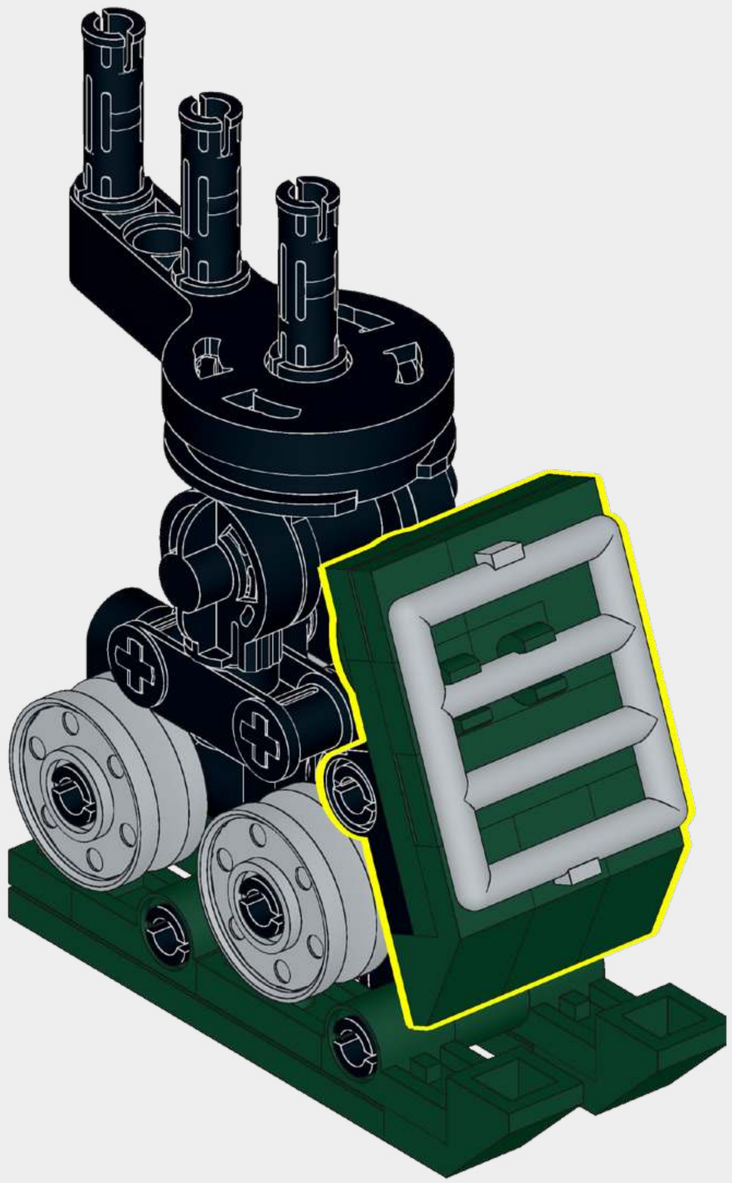

193

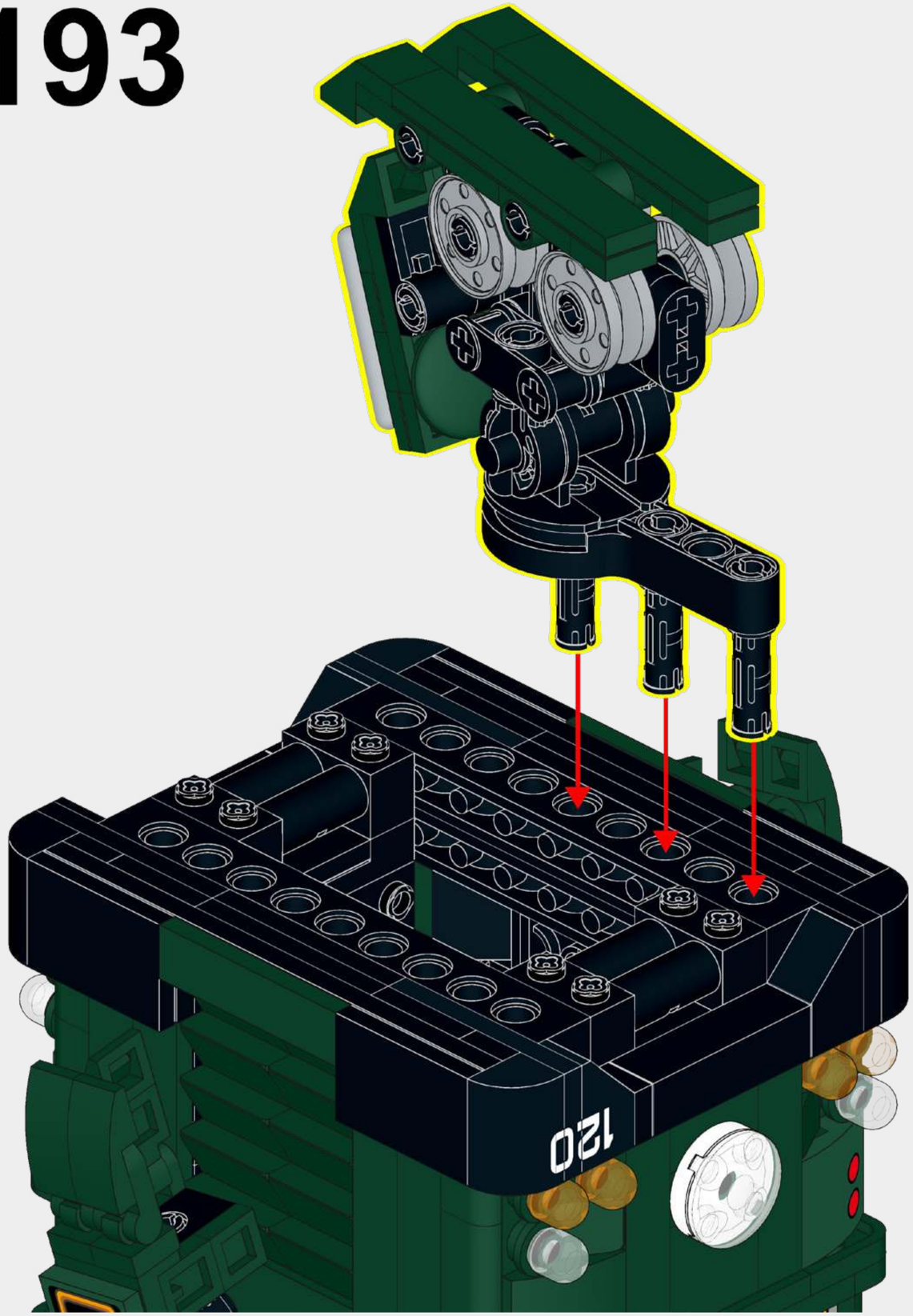

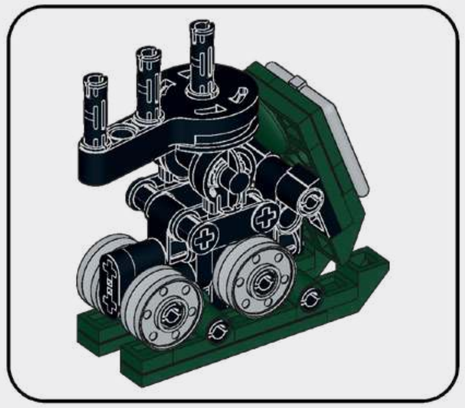

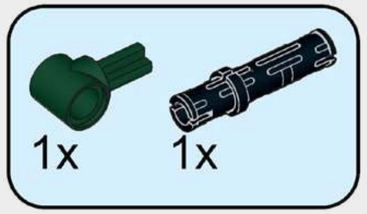

194

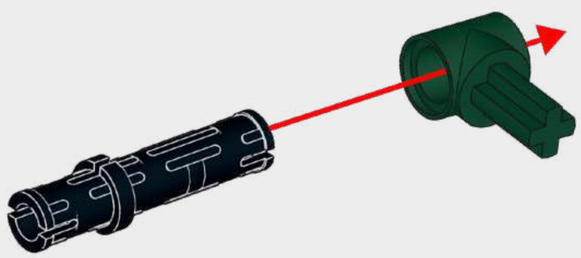

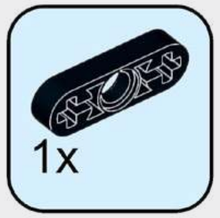

195

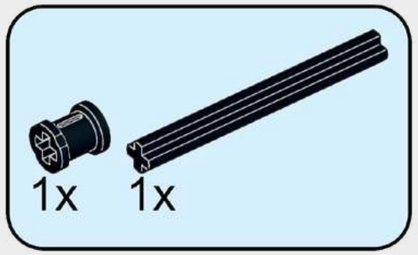

196

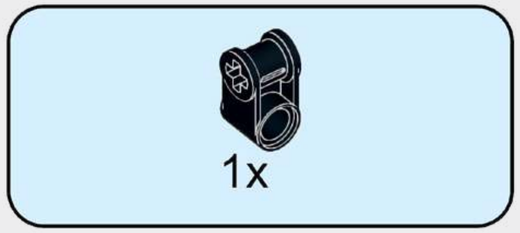

197

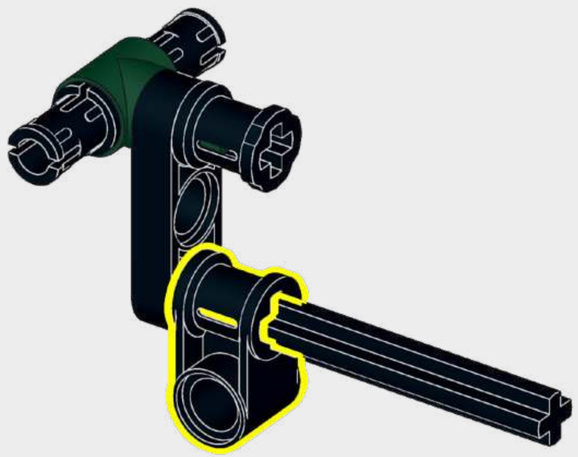

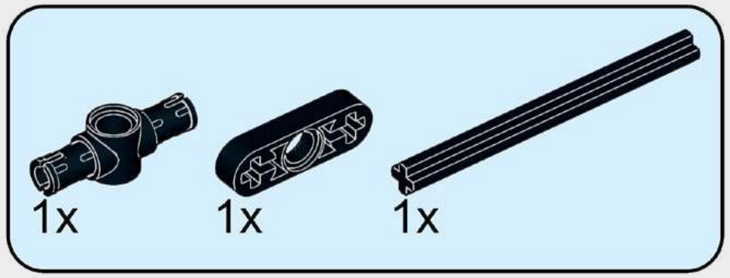

198

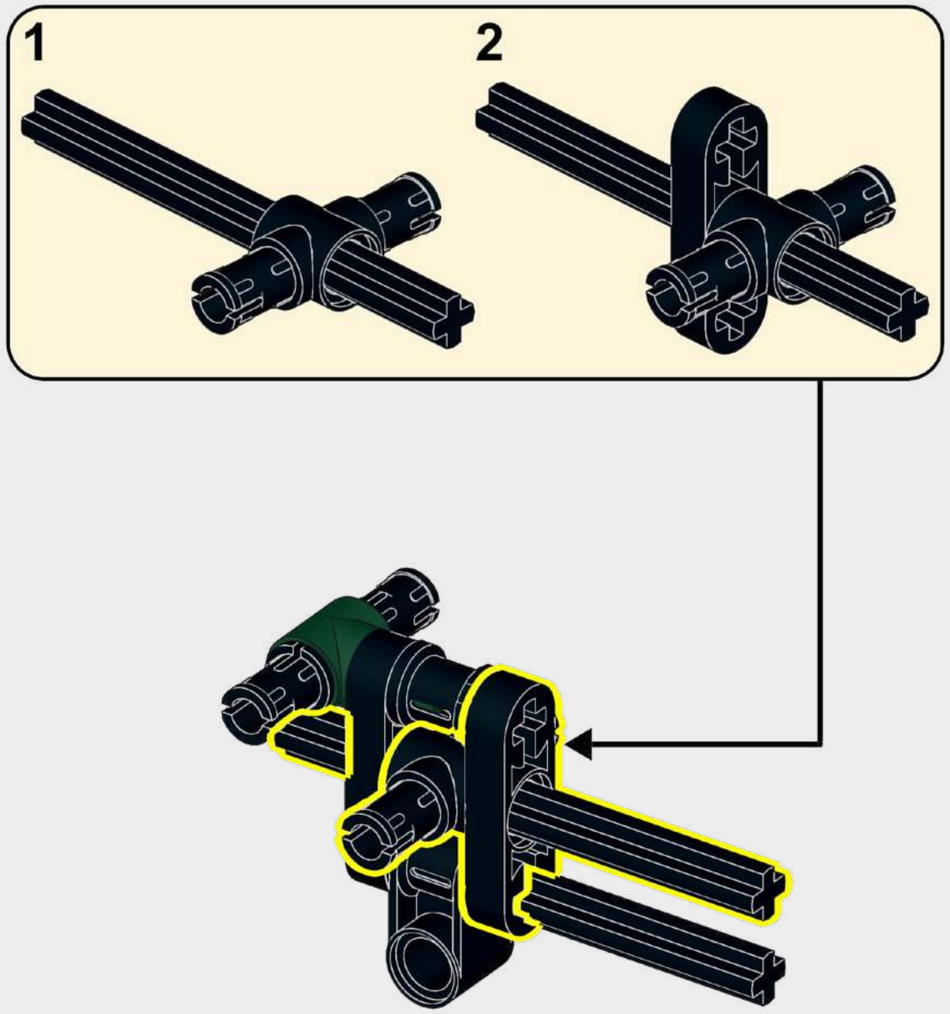

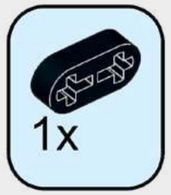

199

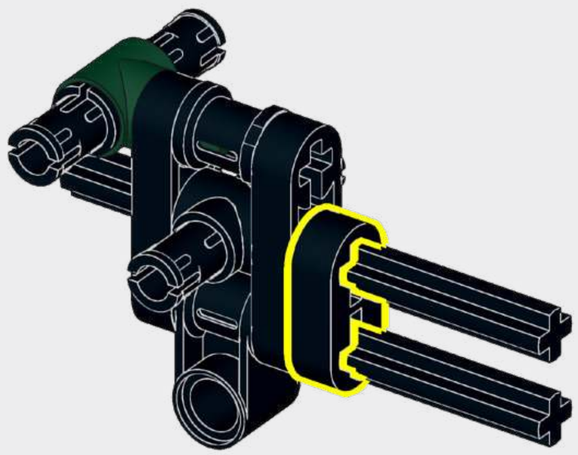

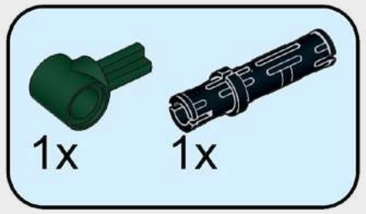

200

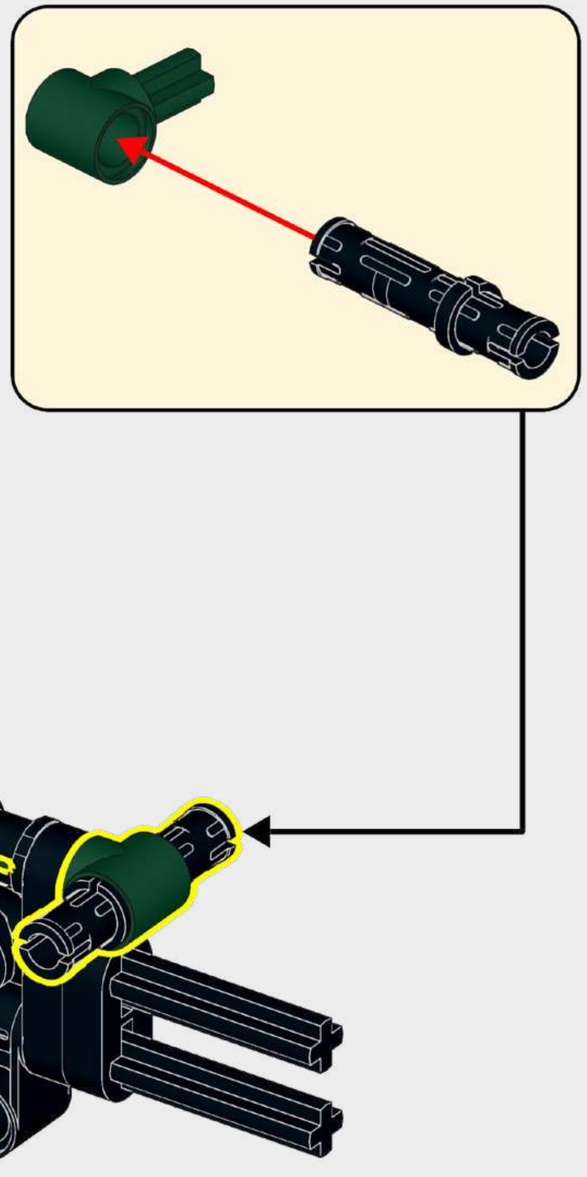

201

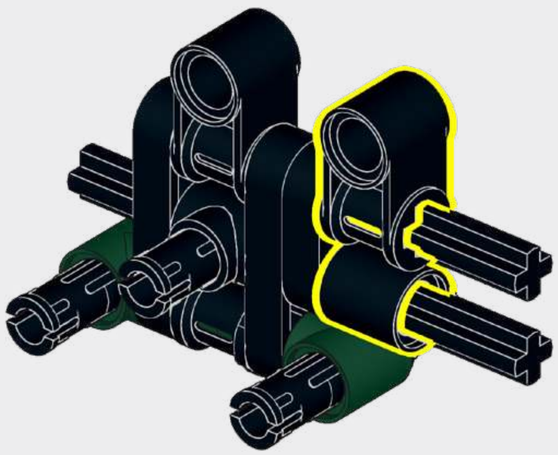

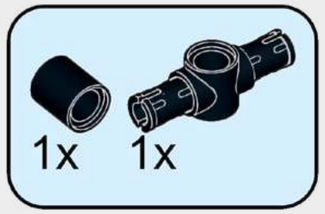

202

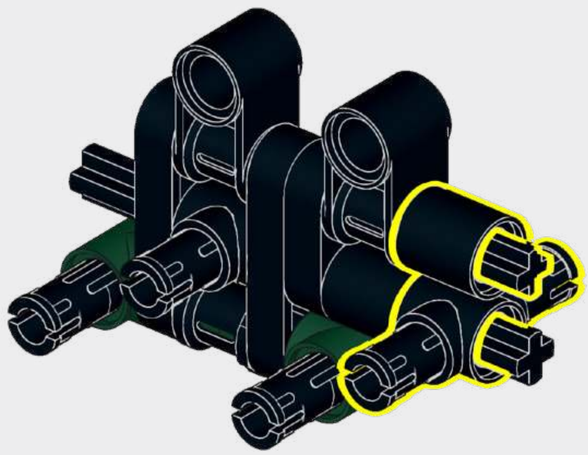

203

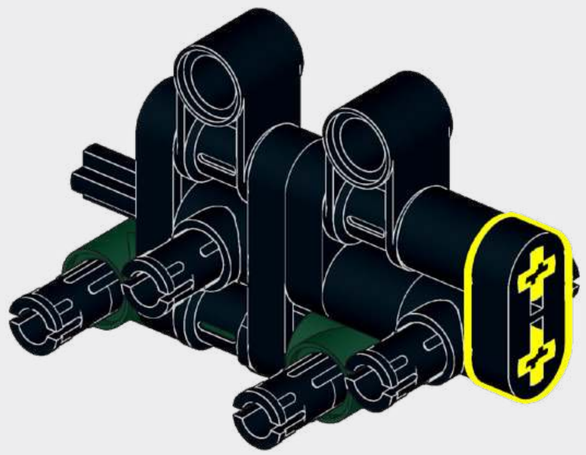

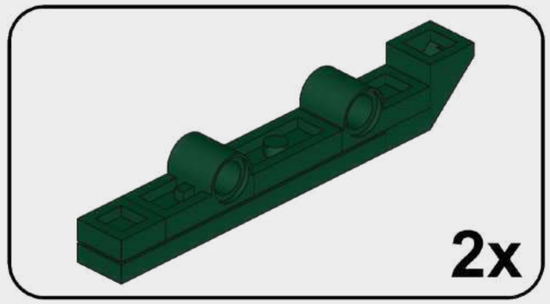

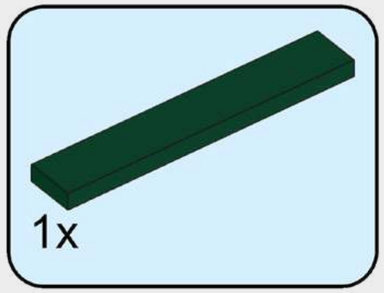

204

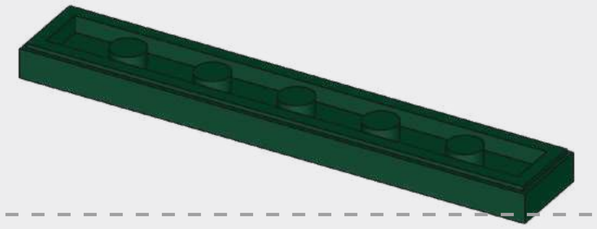

205

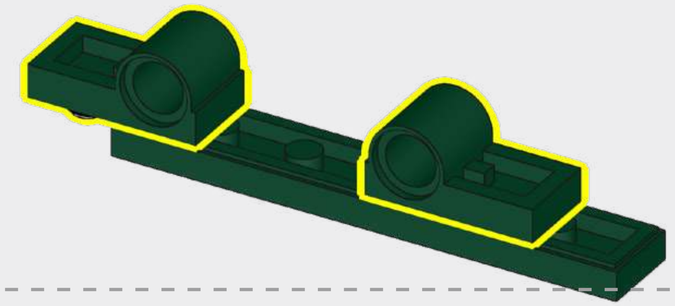

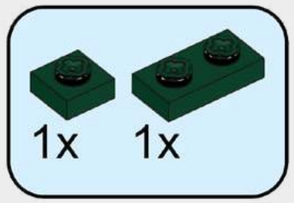

206

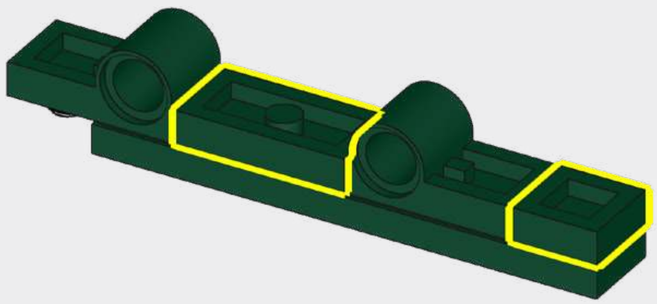

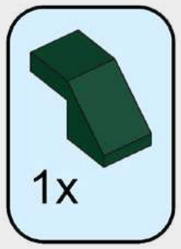

207

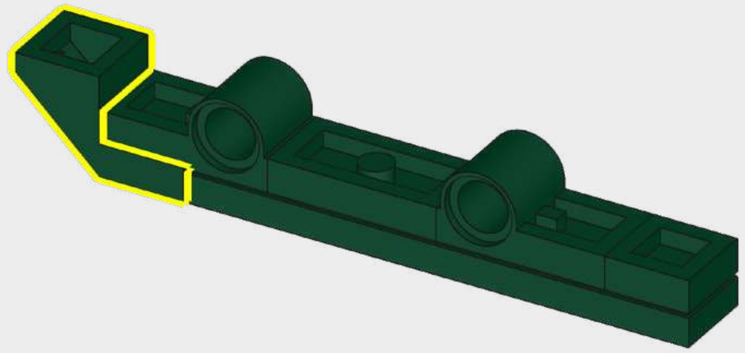

208

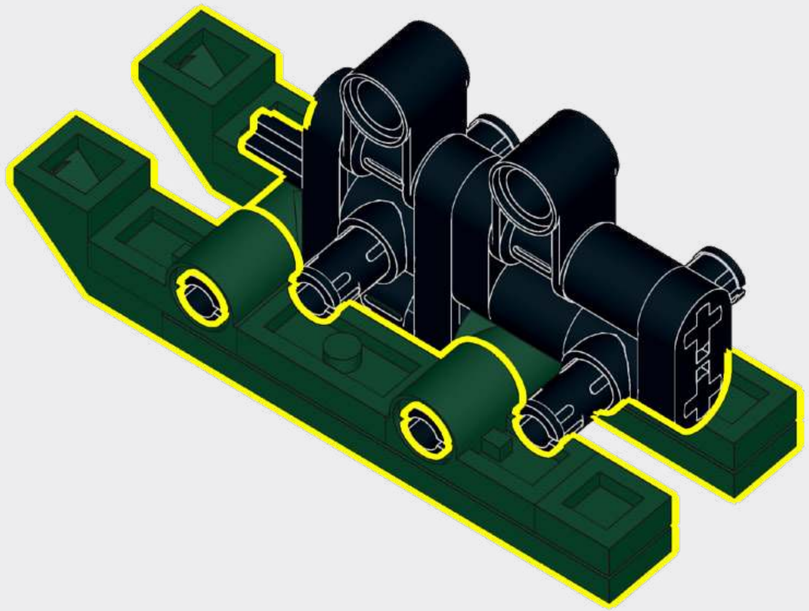

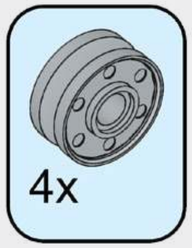

209

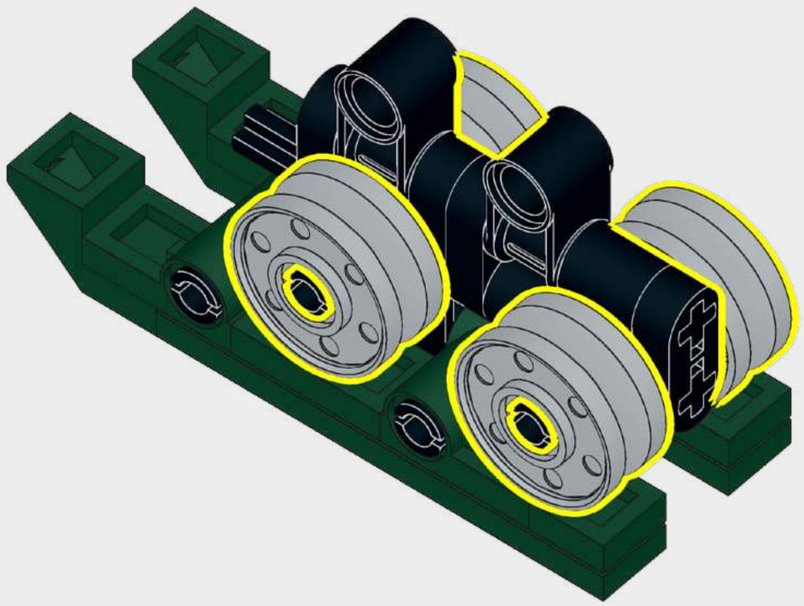

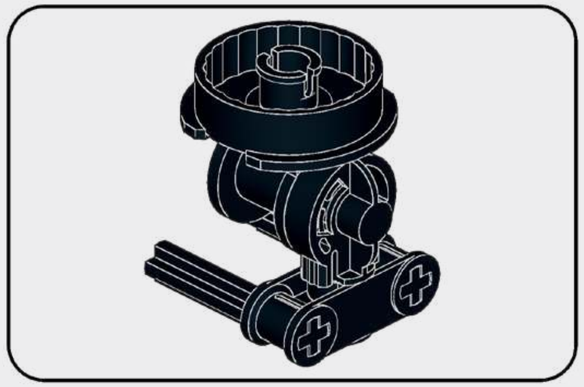

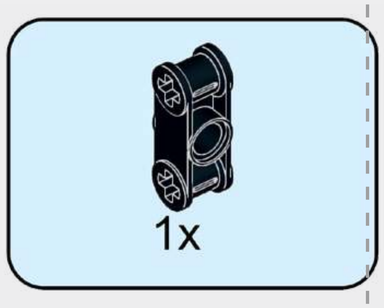

210

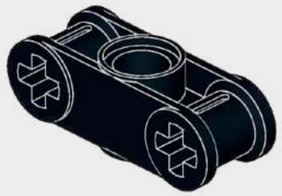

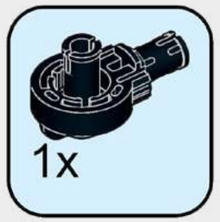

212

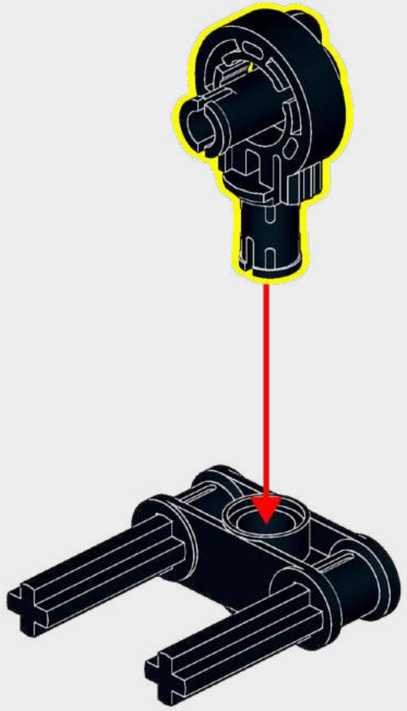

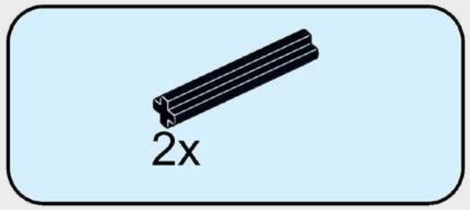

211

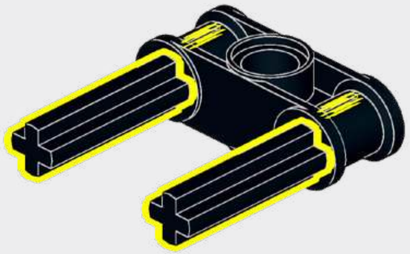

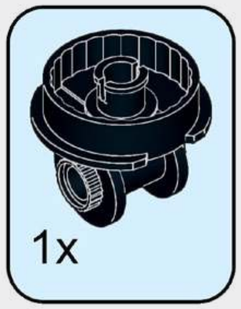

213

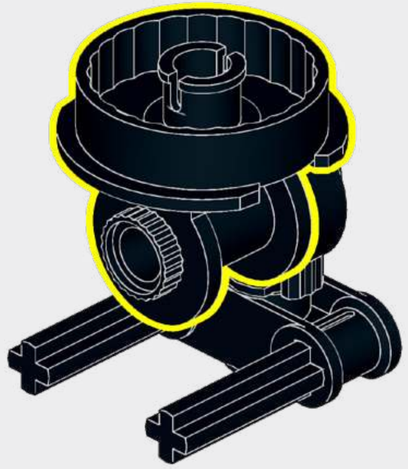

214

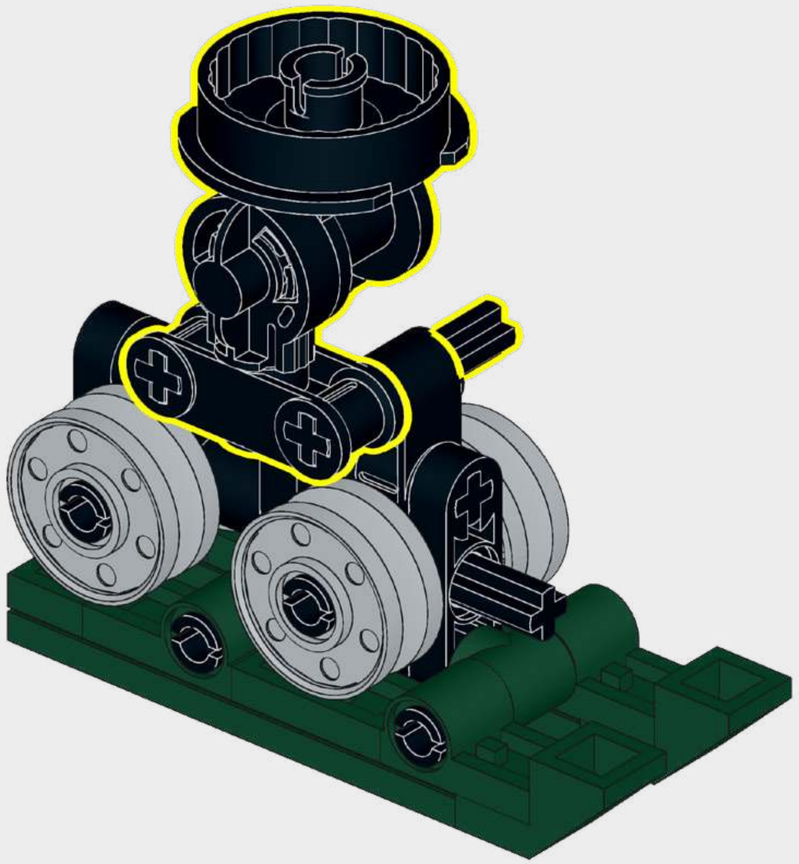

215

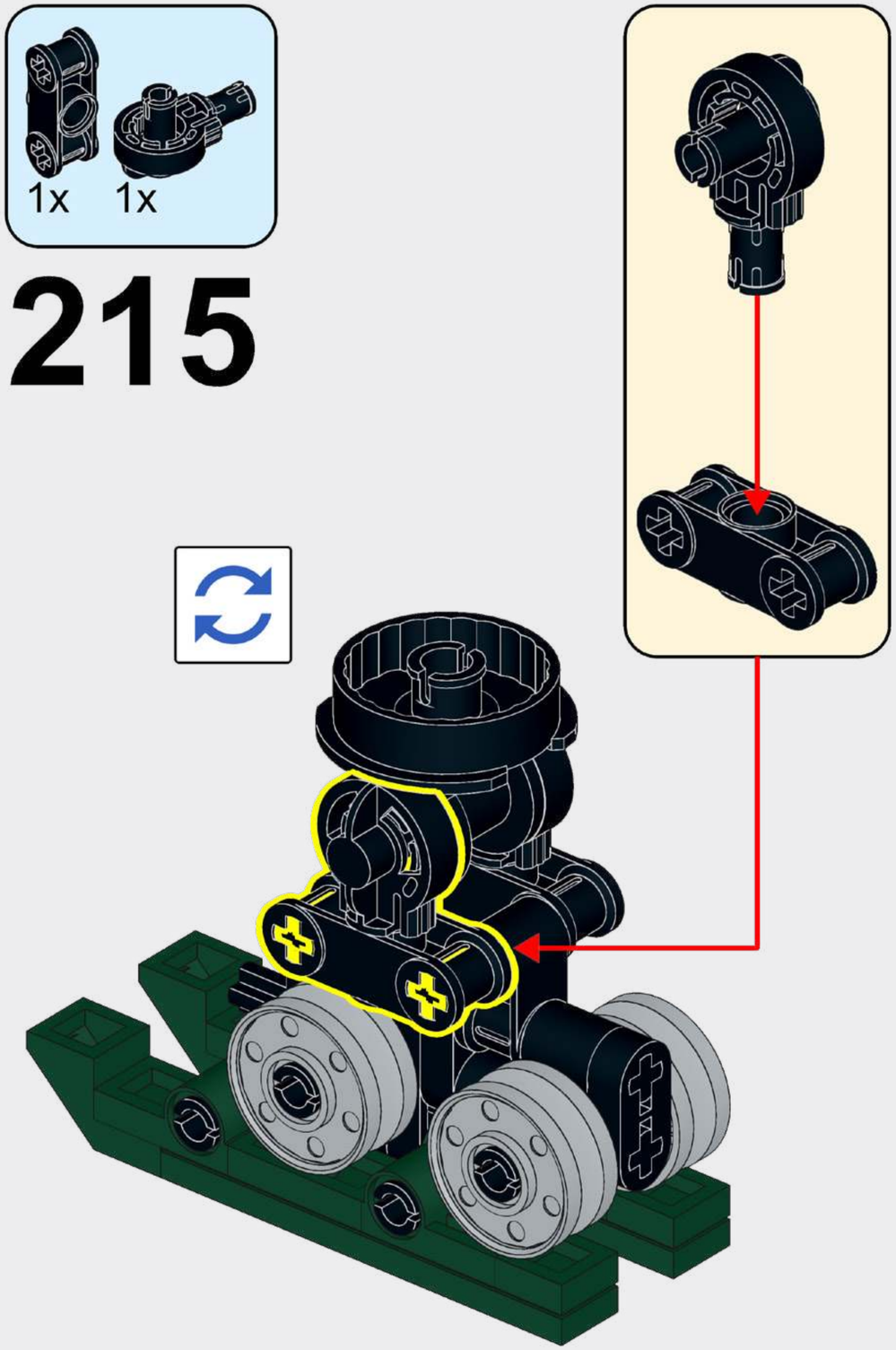

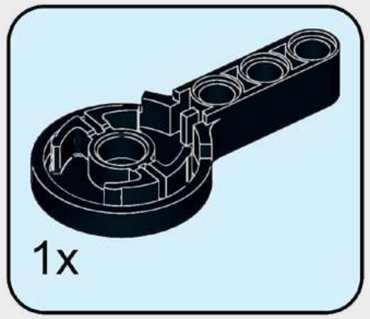

216

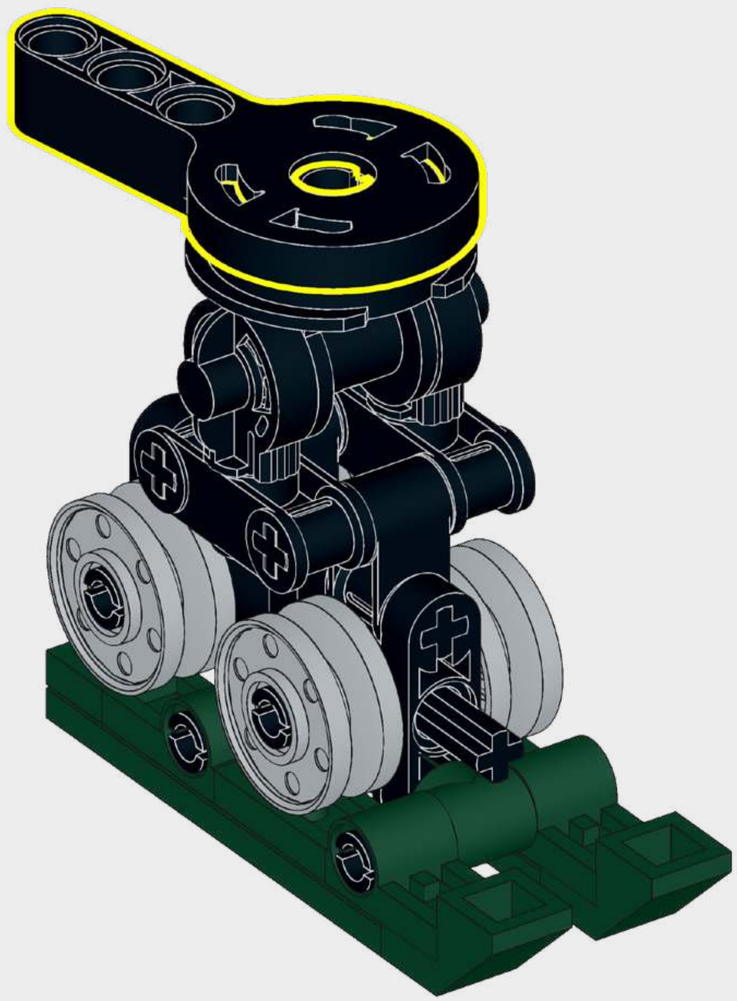

217

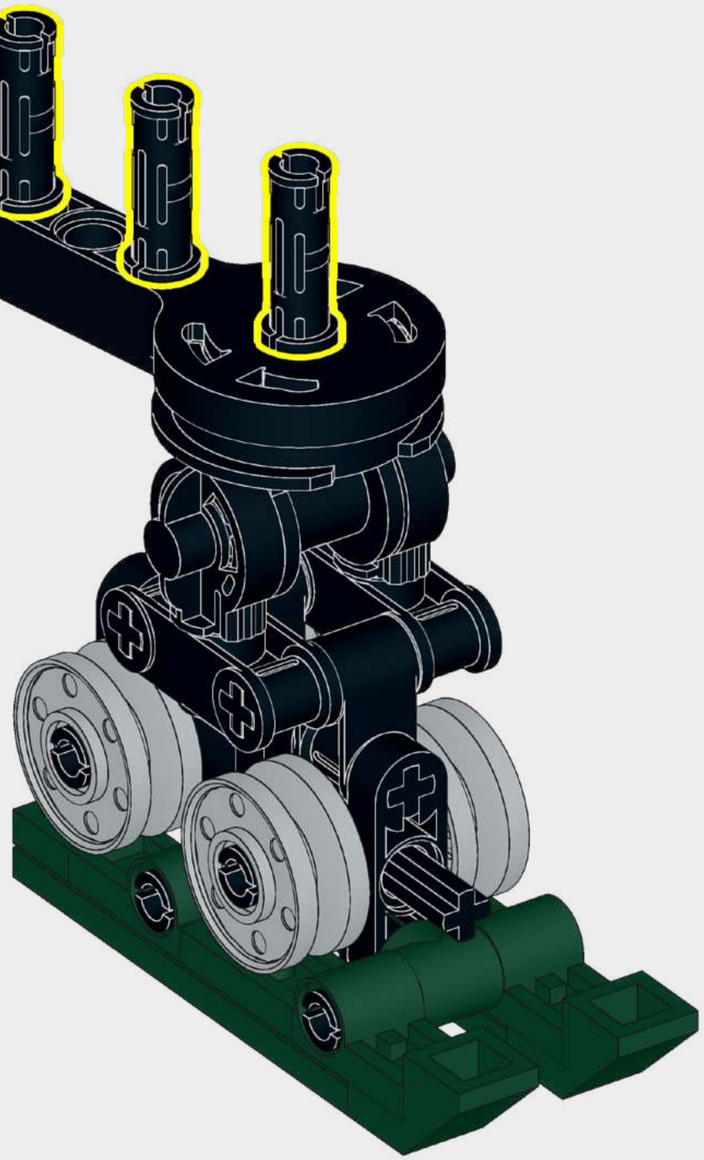

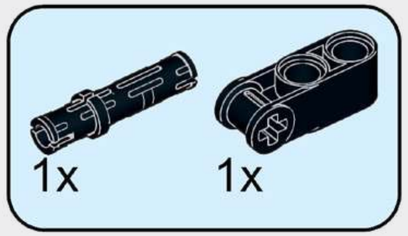

218

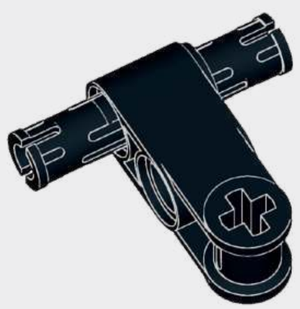

219

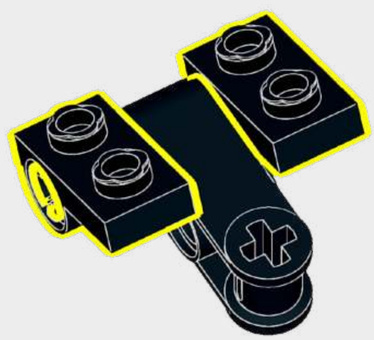

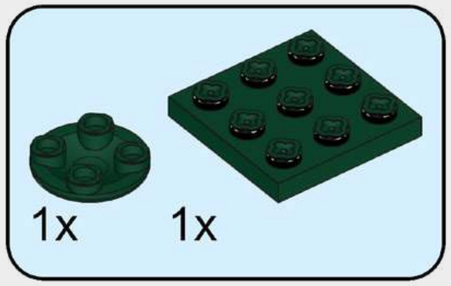

220

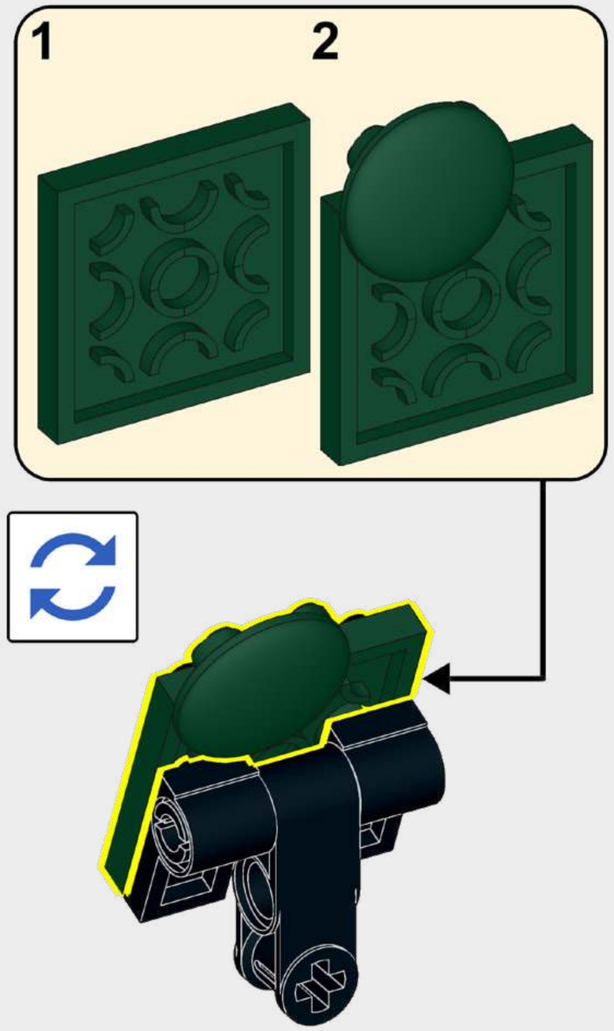

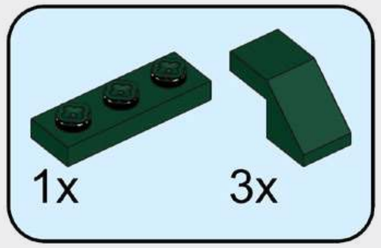

221

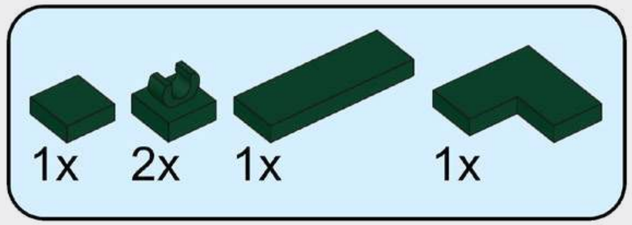

222

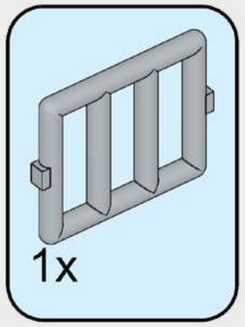

223

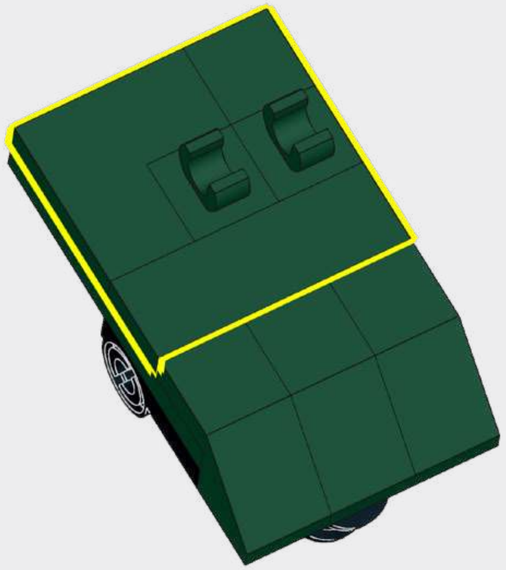

224

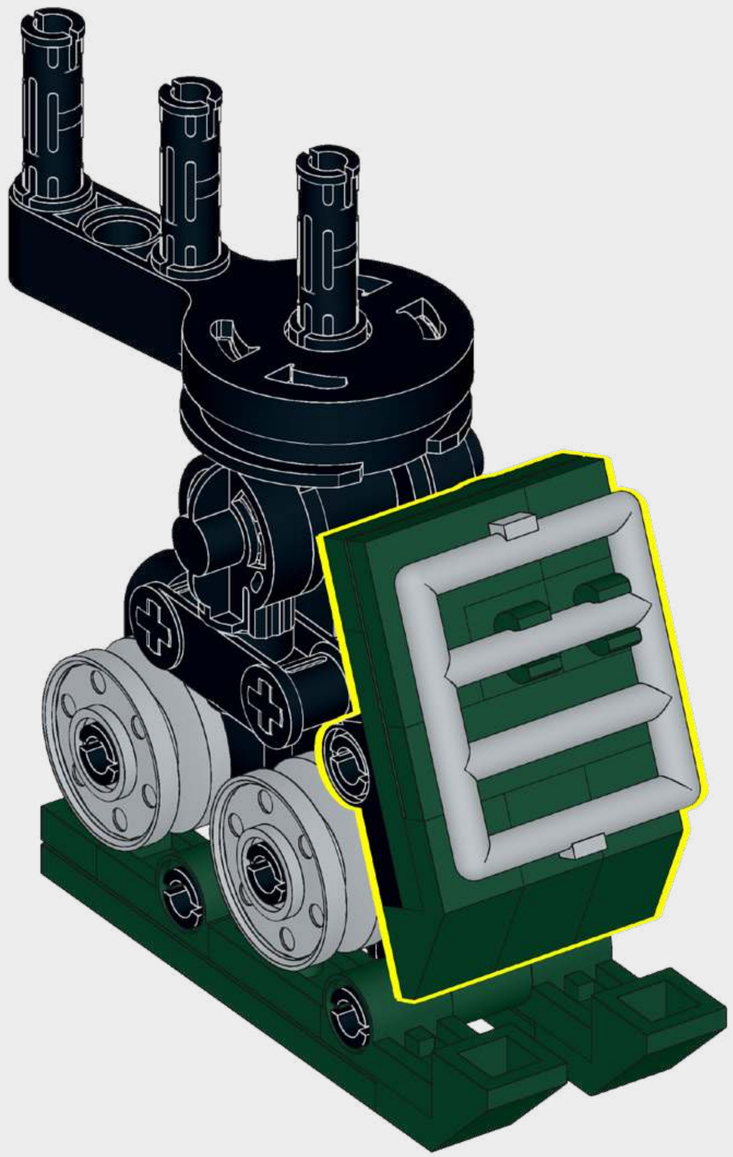

225

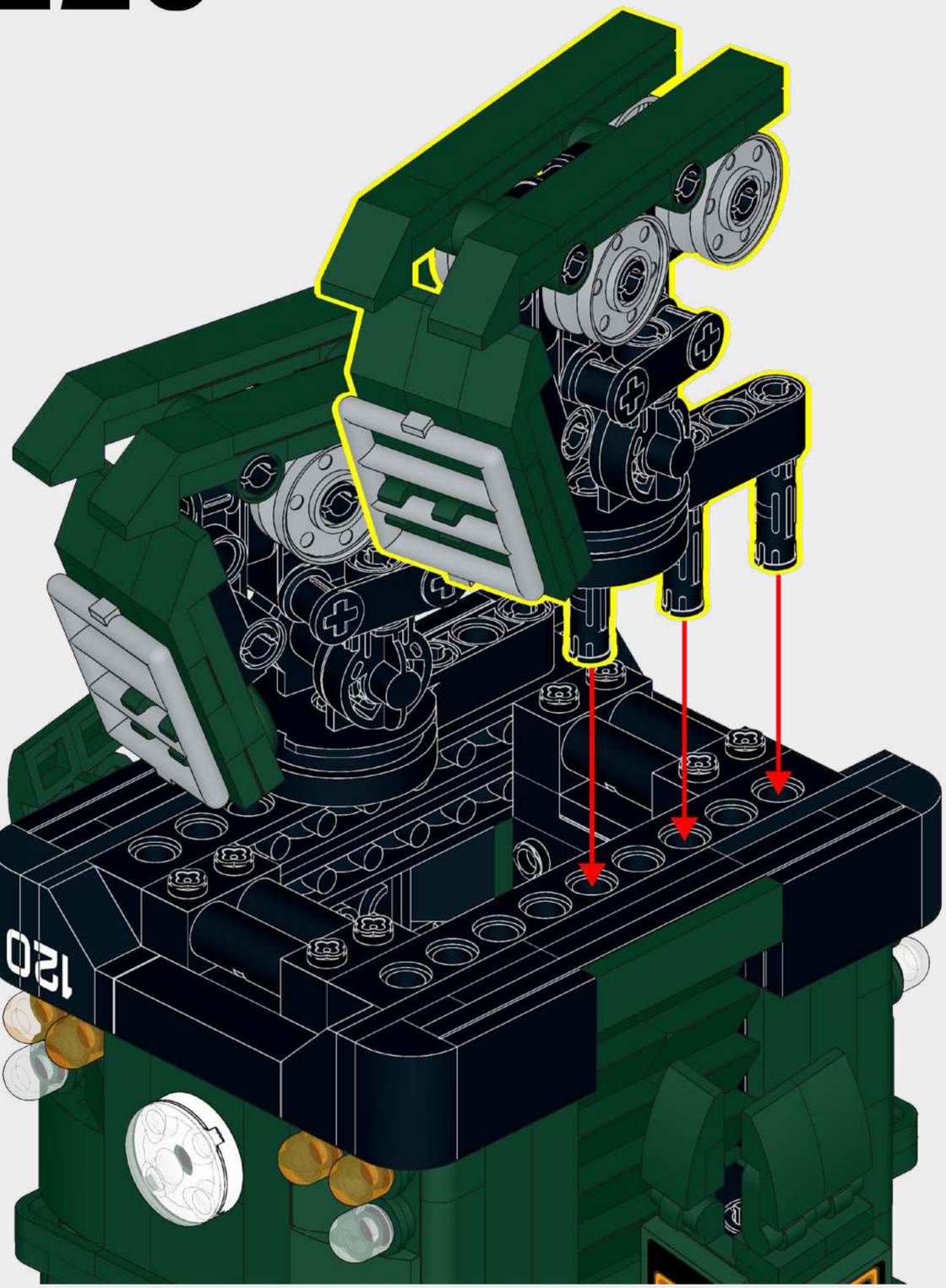

120
120
丹
雨
十
特效
保証
退熱
止痛
120
120

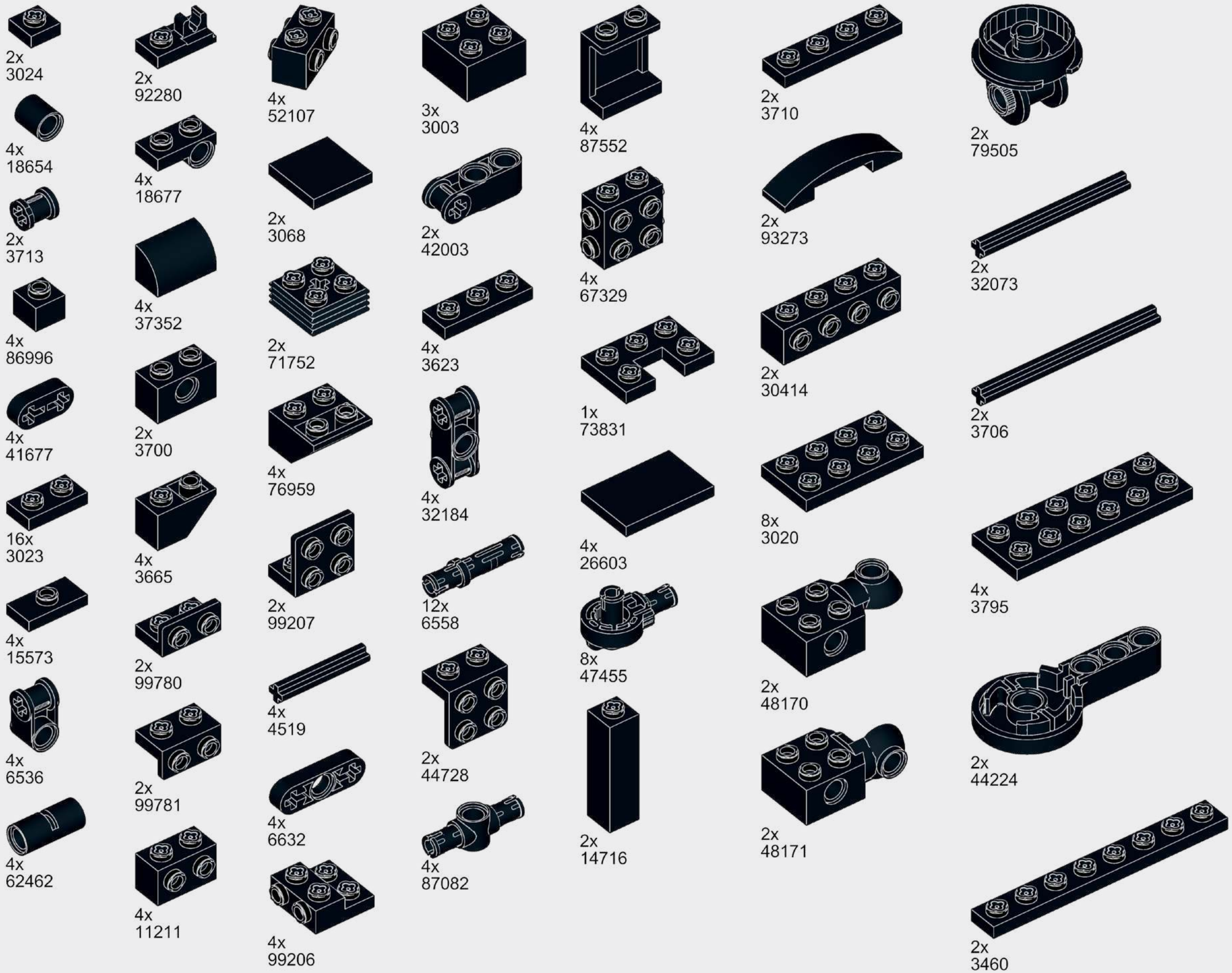
2x 3024
4x 18654
2x 3713
4x 86996
4x 41677
16x 3023
4x 15573
4x 6536
4x 62462
2x 92280
4x 18677
4x 37352
2x 3700
4x 3665
2x 99780
2x 99781
4x 11211
4x 52107
2x 3068
2x 71752
4x 76959
2x 99207
4x 4519
4x 6632
4x 99206
3x 3003
2x 42003
4x 3623
4x 32184
12x 6558
2x 44728
4x 87082
4x 87552
4x 67329
1x 73831
4x 26603
8x 47455
2x 14716
2x 3710
2x 93273
2x 30414
8x 3020
2x 48170
2x 48171
2x 79505
2x 32073
2x 3706
4x 3795
2x 44224
2x 3460

3x
3034

2x
4477

4x
2730

1x
3832

1x
3006

3x
3030

1x
3024

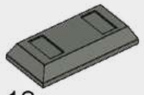

12x
99563

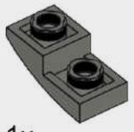

1x
24201

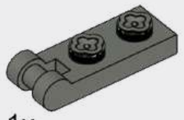

1x
60478

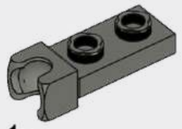

1x
14418

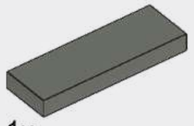

1x
63864

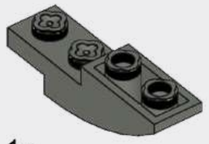

1x
13547

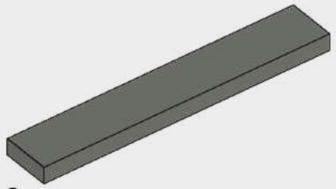

2x
6636

2x
3024

4x
4274

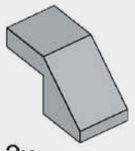

2x
28192

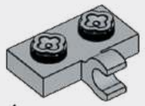

1x
11476

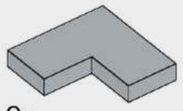

2x
14719

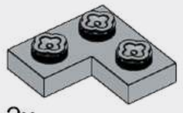

2x
2420

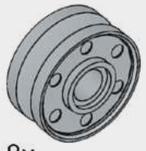

8x
56902

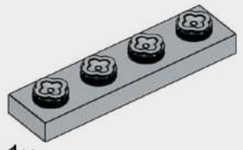

1x
3710

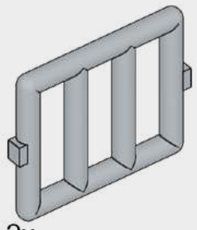

2x
6016

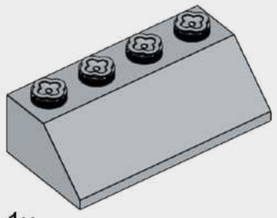

1x
3037

2x
86996

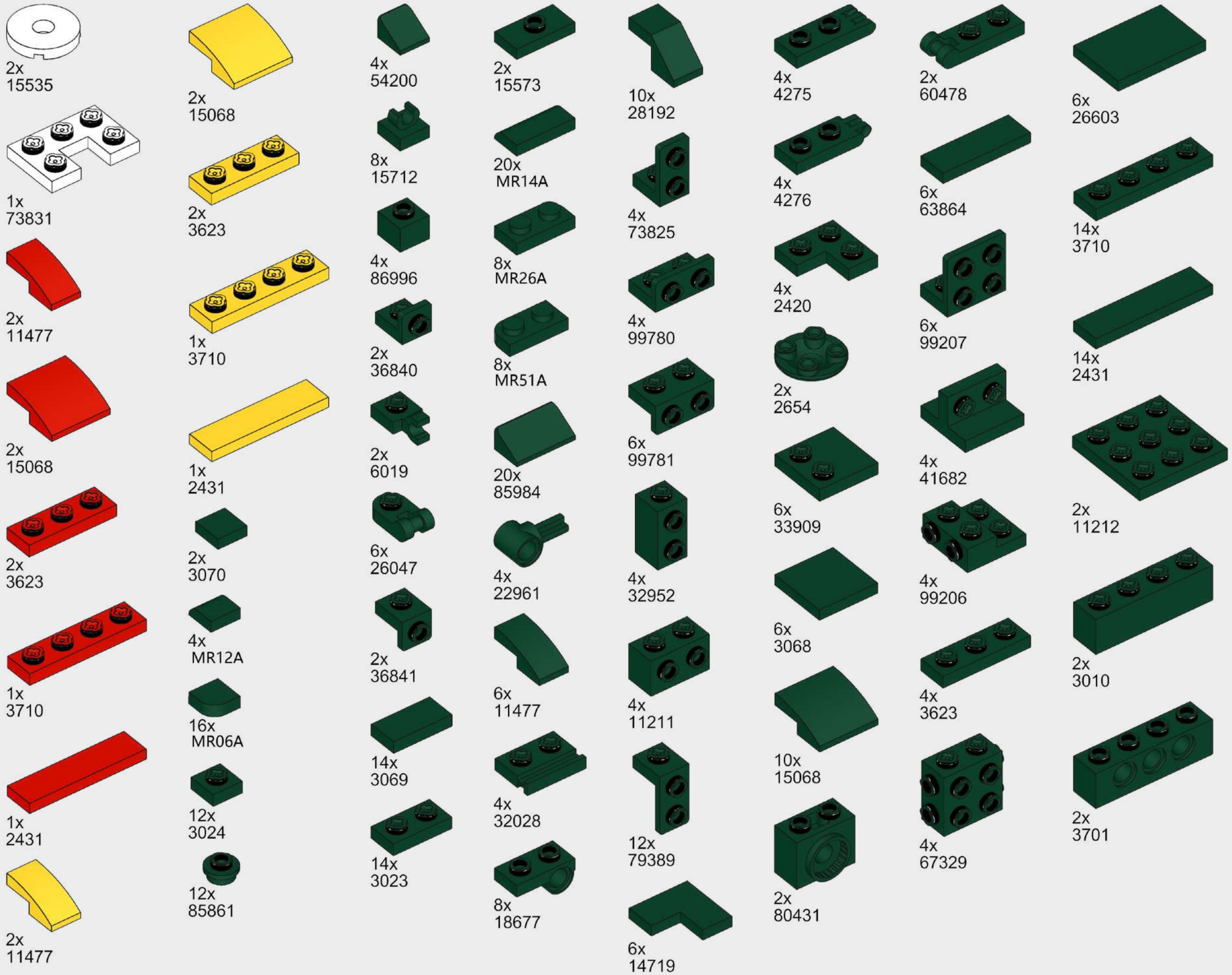
2x 15535
1x 73831
2x 11477
2x 15068
2x 3623
1x 3710
1x 2431
2x 11477
2x 15068
1x 3710
2x 3623
2x 3070
4x MR12A
16x MR06A
12x 3024
12x 85861
4x 54200
8x 15712
4x 86996
2x 36840
2x 6019
6x 26047
2x 36841
14x 3069
14x 3023
2x 15573
20x MR14A
8x MR26A
8x MR51A
20x 85984
4x 22961
6x 11477
4x 32028
8x 18677
10x 28192
4x 73825
4x 99780
6x 99781
4x 32952
4x 11211
12x 79389
6x 14719
4x 4275
4x 4276
4x 2420
2x 2654
6x 33909
6x 3068
10x 15068
2x 80431
2x 60478
6x 63864
6x 99207
4x 41682
4x 99206
4x 3623
4x 67329
6x 26603
14x 3710
14x 2431
2x 11212
2x 3010
2x 3701

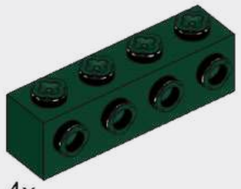

4x
30414

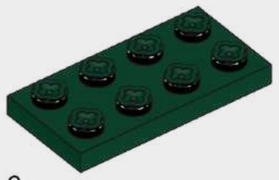

6x
3020

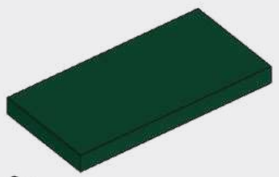

6x
87079

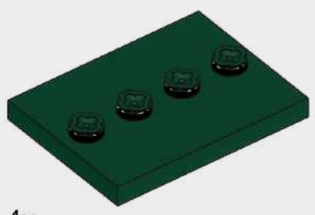

4x
88646

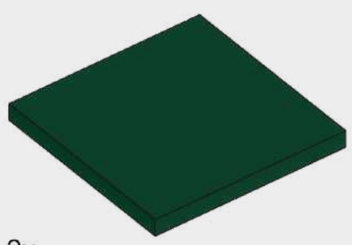

2x
1751

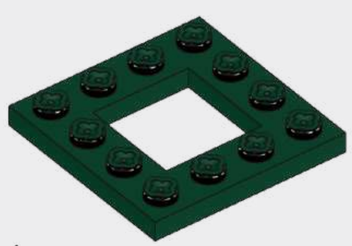

4x
64799

10x
6636

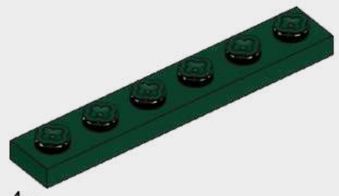

4x
3666

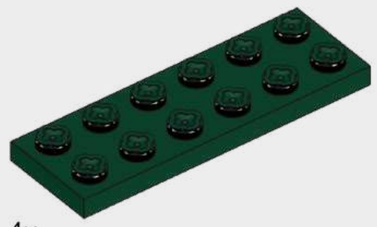

4x
3795

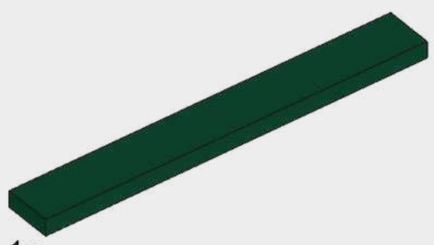

1x
4162

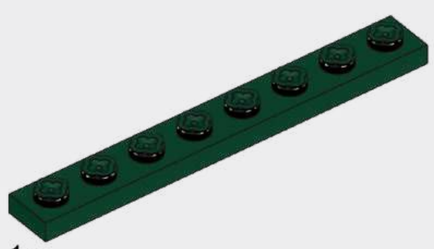

1x
3460

6x
4510

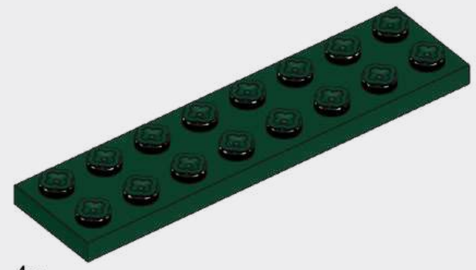

4x
3034

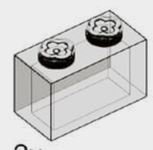

2x
3065

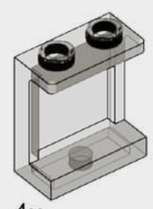

4x
87552

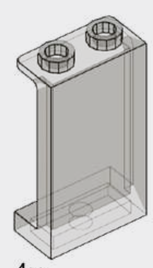

4x
74968

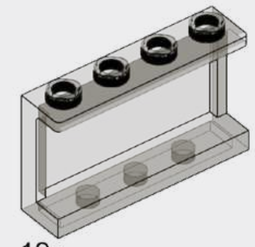

12x
14718

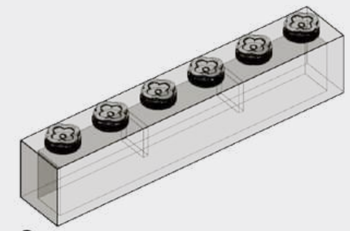

2x
3067

4x
58176

2x
2654

8x
58176

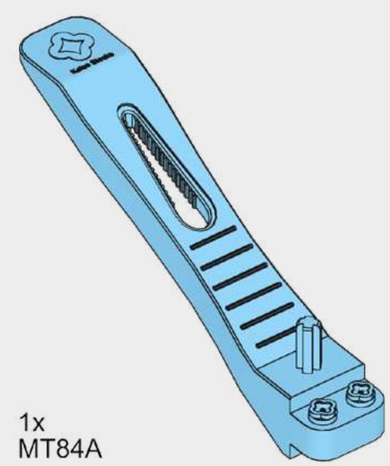

1x
MT84A

120
120
丹 雷 十
特效 保証
退熱 止痛
120
120

120

味 素

香港重機
HONGKONG MACHINES

Collect all the Hong Kong Machines models

紅的重機

KB38001

01 MECHA TAXI RED

叮叮重機

KB38002

02 MECHA TRAM

巴士重機

KB38003

03 MECHA CMB

MECHA TRAM

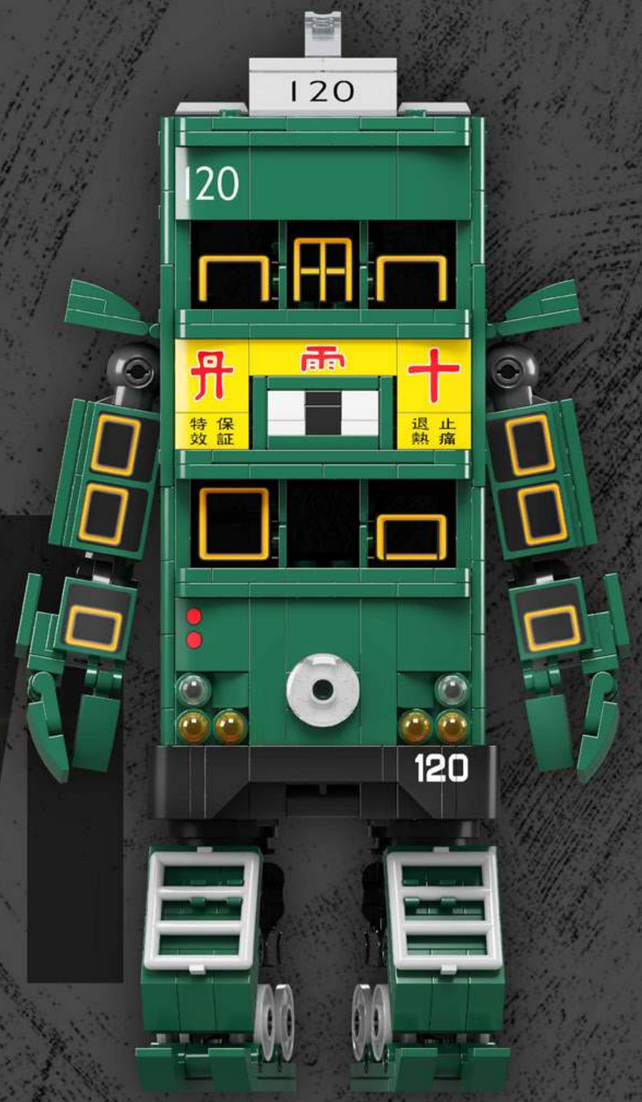

香港重機
HONGKONG MACHINES

佳樂專 Kalos Blocks

花型藝術積木 FLORAL-ART BLOCKS

KalosBlocks

www.kalos-blocks.com

TINY 微影

TINY.com.hk

tinyhk

hktiny

Tiny HK Official

教學影片