香港重機
HONGKONG MACHINES

TINY 微影

佳樂專 Kalos Blocks

紅的重機

KB38001

01

MECHA TAXI RED

20
HONGKONG
MACHINES
18
TAXI
高度易燃物品
HIGHLY FLAMMABLE GOODS
宮塘牛頭角
LEYLAND
DENNIS
FELIX IP

葉偉青

作者葉偉青將自己童年滿滿懷舊回憶注入了「香港重機」一系列機械人中，既復刻又充滿創意。憑着異想天開的想像力和奔放豪邁的筆觸，使用公共交通工具作為主題。原創者設計了一系列具有獨特香港特色的機械人-「香港重機」！

葉偉青 - 自由創作人/香港漫畫家/插畫師，2014年前擔任動畫公司創作總監，參與作品包括《忍者龜》,《阿童木》,《時空冒險號》等。其中《香港重機1》更於2019年獲頒《香港出版雙年獎-圖文書出版獎》。

FELIX IP

Hong Kong Machines features a series of “rustic” robots with the infusion of Felix Ip‘s childhood nostalgic memories. With his whimsical imagination and unrestrained brush strokes; using public transportation as the main theme. Felix has created a series of fascinating robots with distinctive “Hong Kong” characteristics - Hong Kong Machines.

Felix Ip - comic and concept artist, illustrator, and animation director from Hong Kong. He is the former Creative and Movie Director for Animation Studios and Unicorn Animation Studios during 2014. Some of his major works included Zentrix, Teenage Mutant Ninja Turtle, and Astroboy. One of the books Hong Kong Machines 1 has won the Best Artbook.Award in the Asia Pacific Animation & Comics category in 2019.

香港重機
HONGKONG MACHINES

《香港重機》- 最初只屬自娛項目，經社交媒體分享後備受關注，繼而衍生不同類型的產品。 運用異想天開的想像力和獨特筆觸， 最初以公共交通為主題；創建了具有獨特“香港”特徵的天馬行空機器人- 《香港重機》！靈感取材自生活常見的本土貼地元素，加以灌注童年回憶情懷；《120叮叮電車重機》、《火水爐重機》、《糖蔥餅重機》等…！一系列冠名《香港》二字的自家機械人在身邊悄悄地蔓延伸展，喚醒你我的流金歲月。

HongKong Machines - originally only a self-entertainment project, the artwork have gained instant popularity after being shared on various social media platform. Different type of products were derived since the official launch of HongKong Machines. Using whimsical imagination and unique brushstrokes, at first using public transportation as the main theme; created unique "Hong Kong" characteristics robots - "Hong Kong Machines"! Inspired by common local essence from daily life, infused with the nostalgic memories from childhood ; "120 Dingding Trambot“, "Kerosene Stovebot”, "Spring Field Pizzabot”, etc...! A series of “HongKong Machines” robots manifested themselves discreetly among us; awaken our long lost golden years.

HONGKONG MACHINES

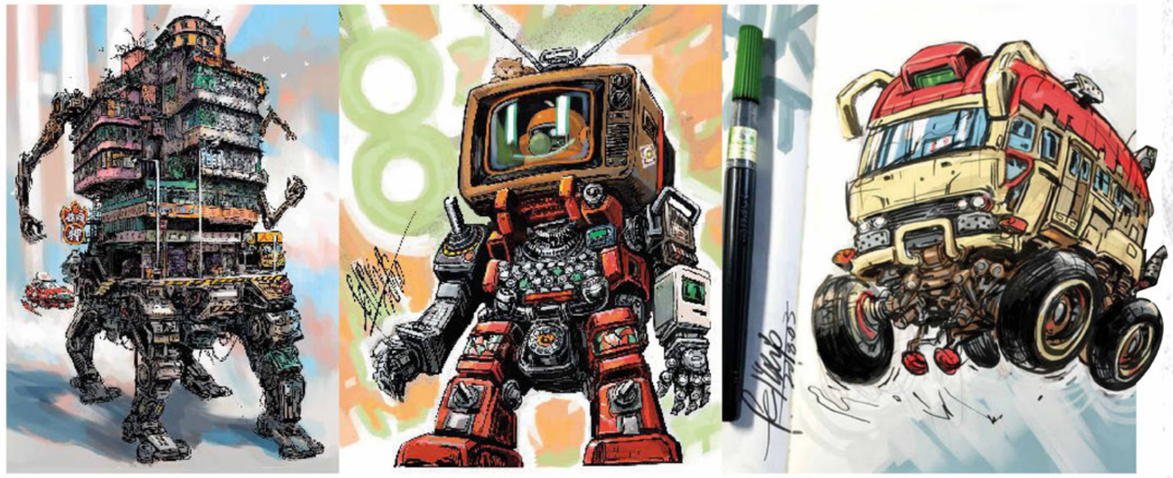

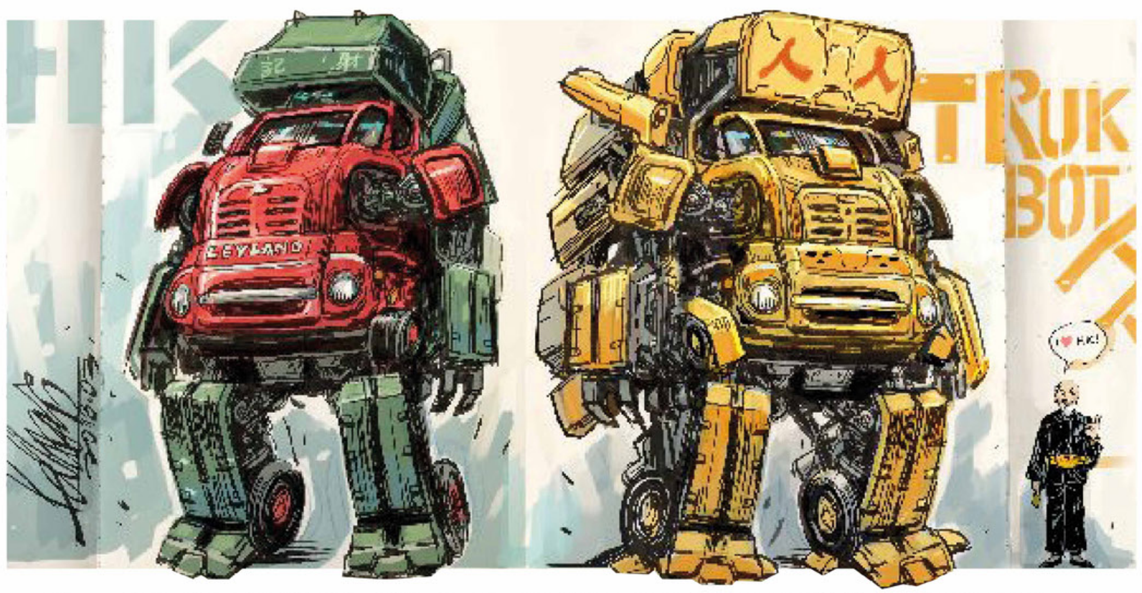

HONG KONG MACHINES

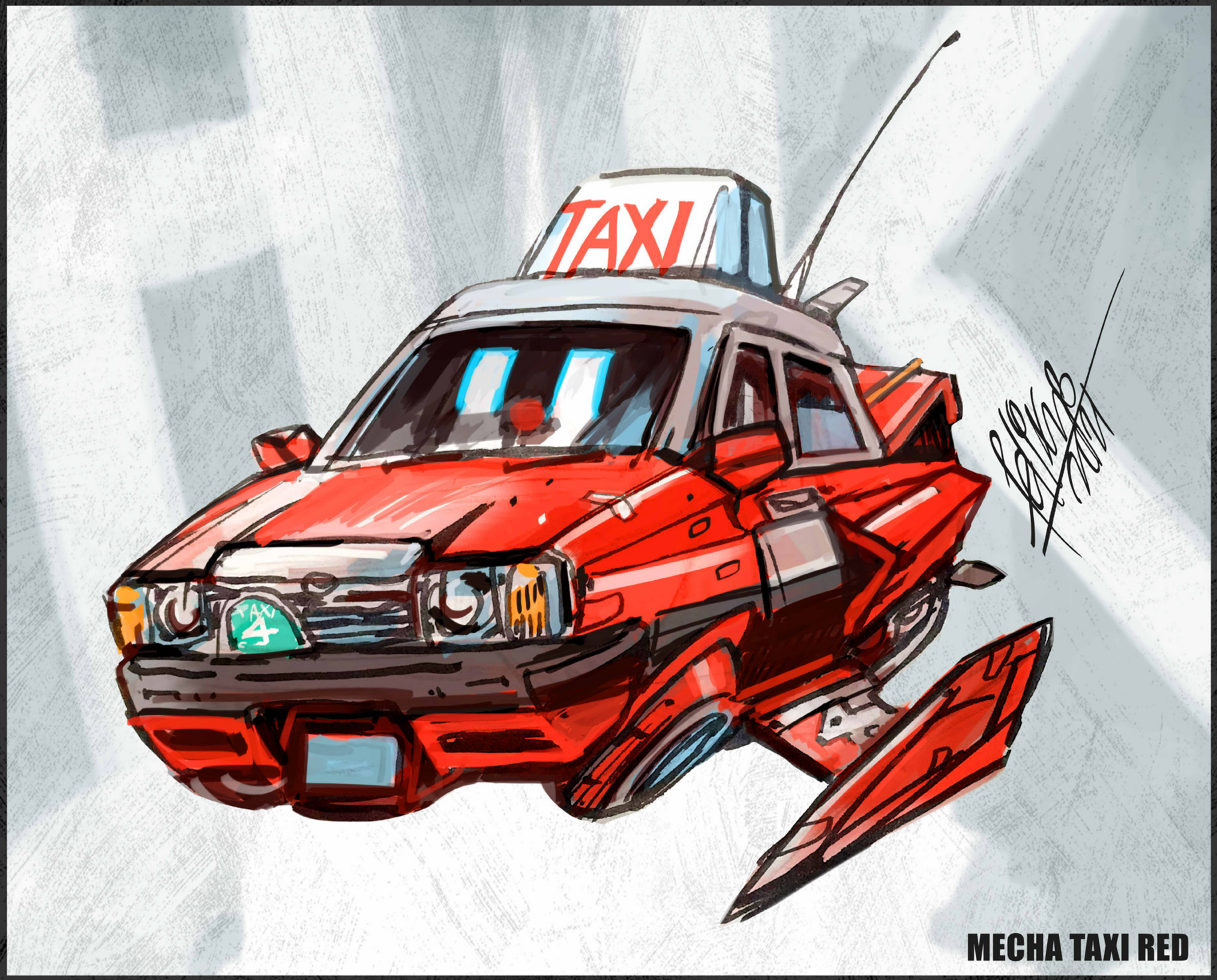

MECHA TAXI RED

1

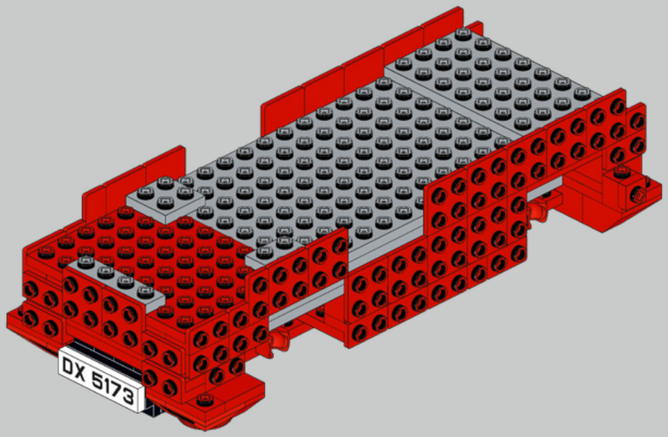

2-3

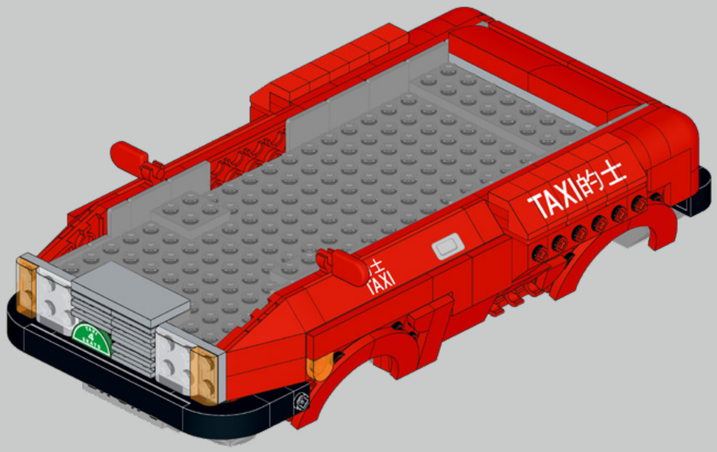

4-5

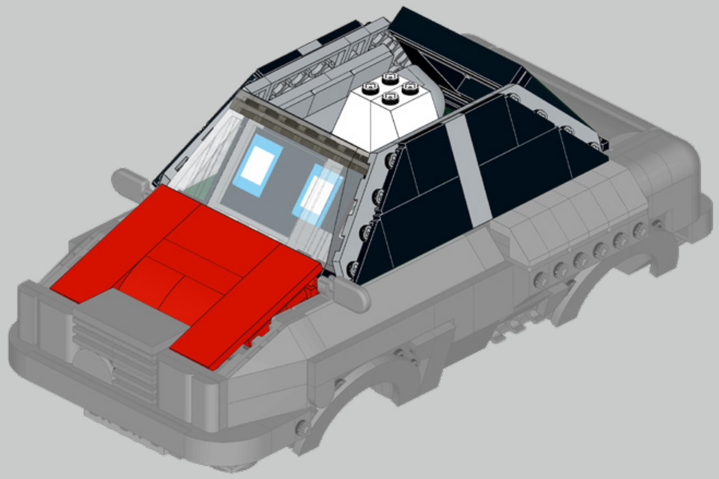

6

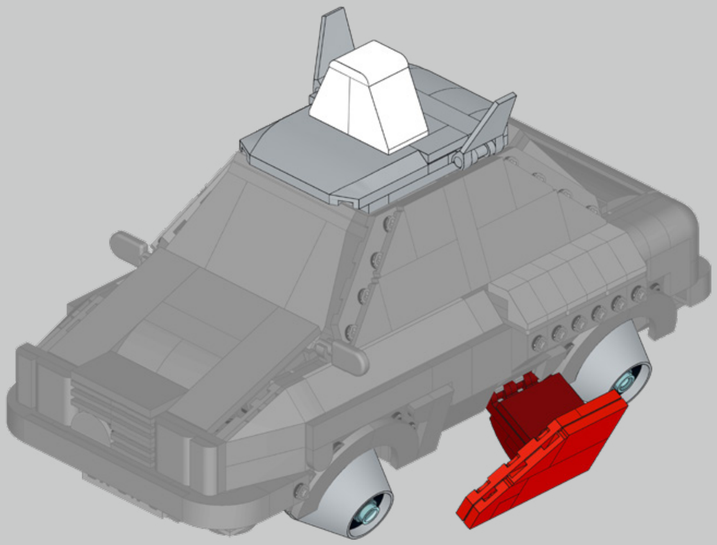

7

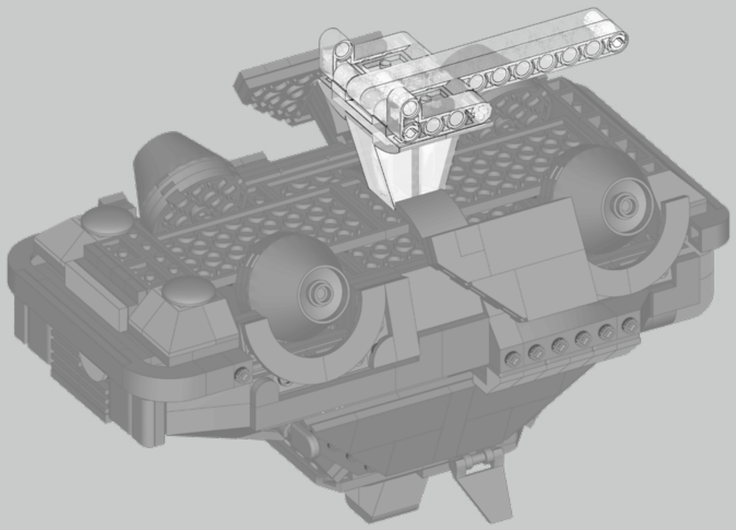

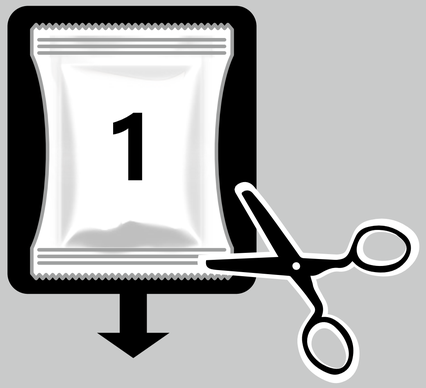
1

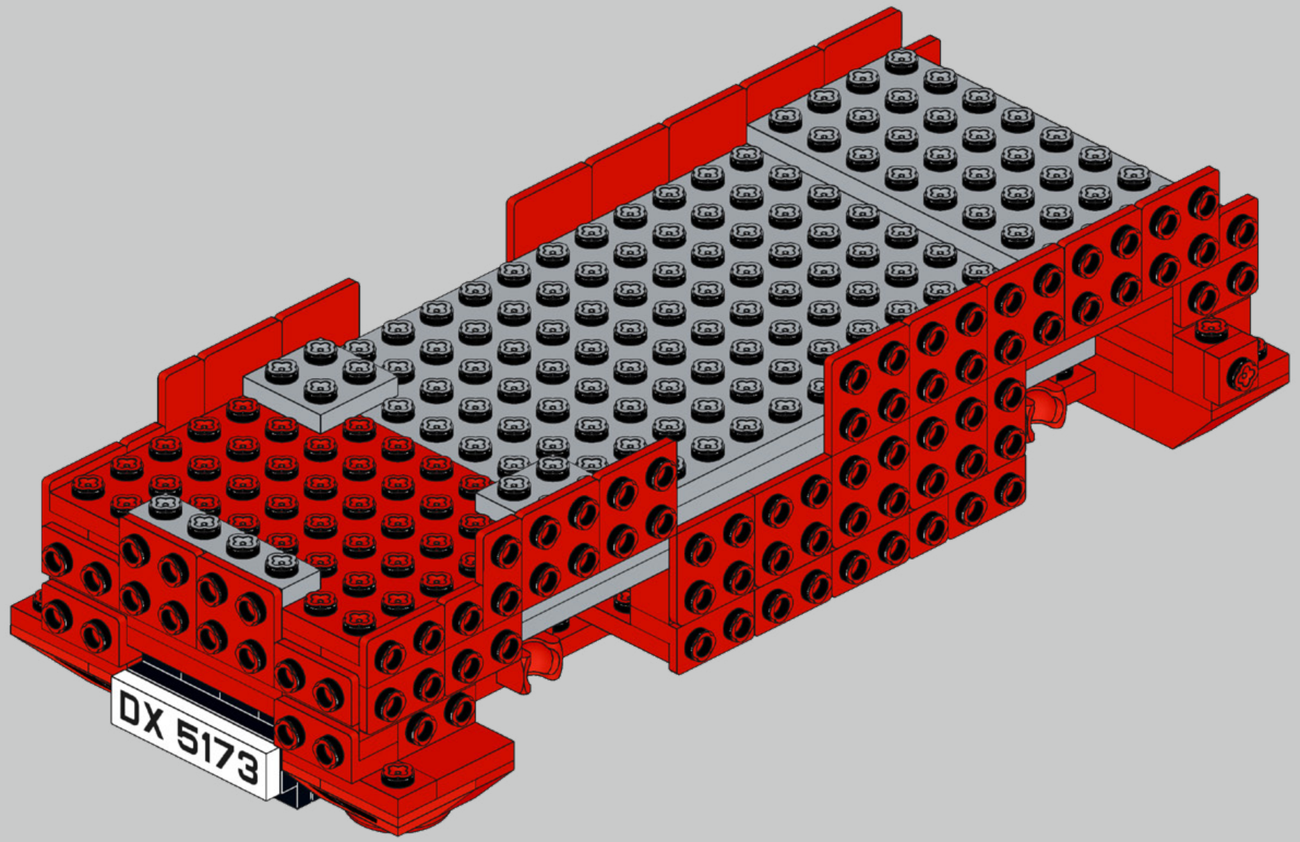
DX 5173

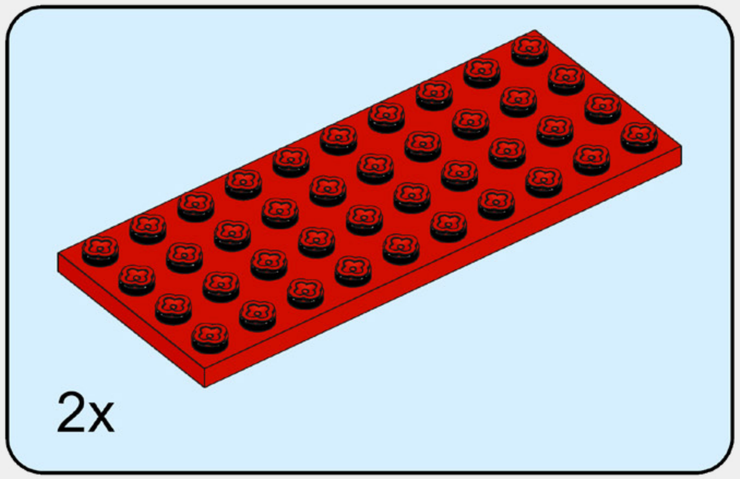

1

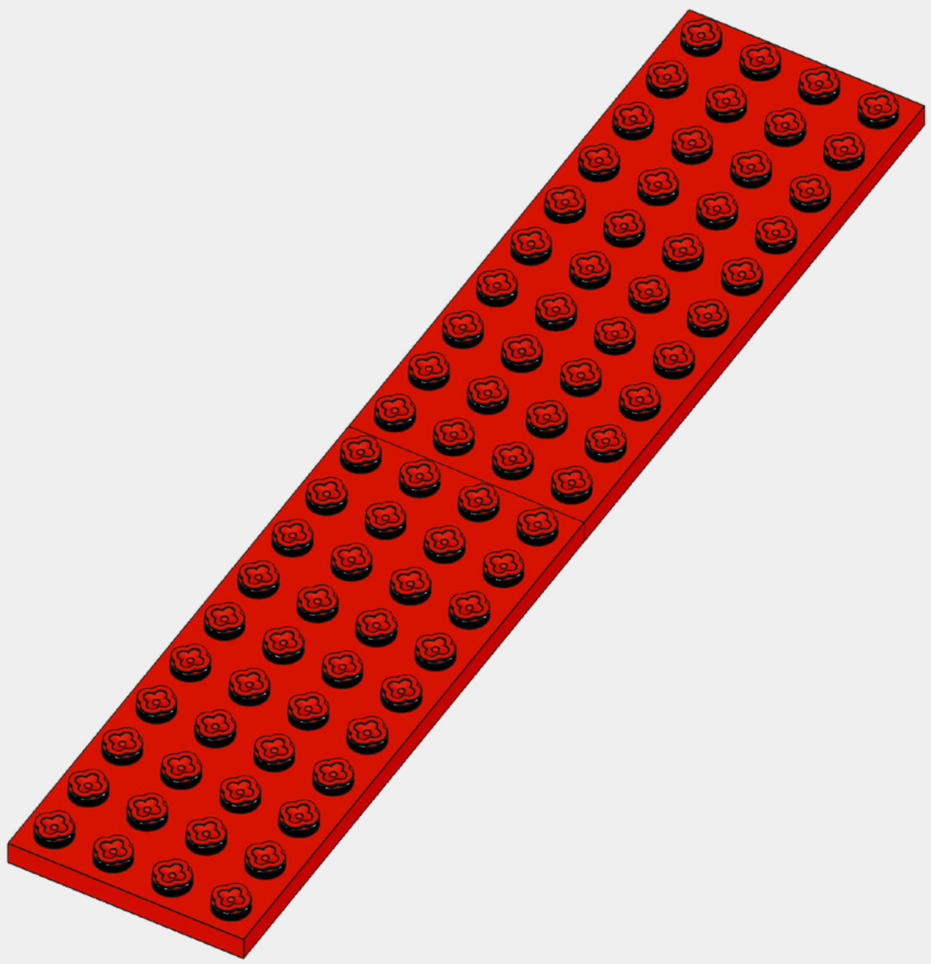

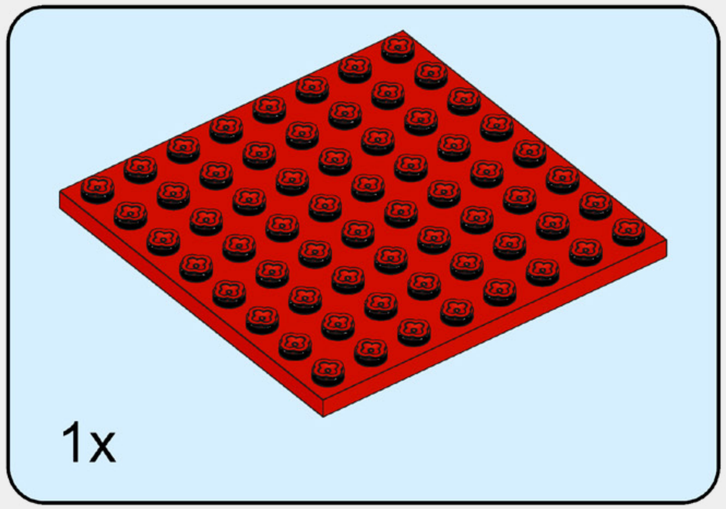

2

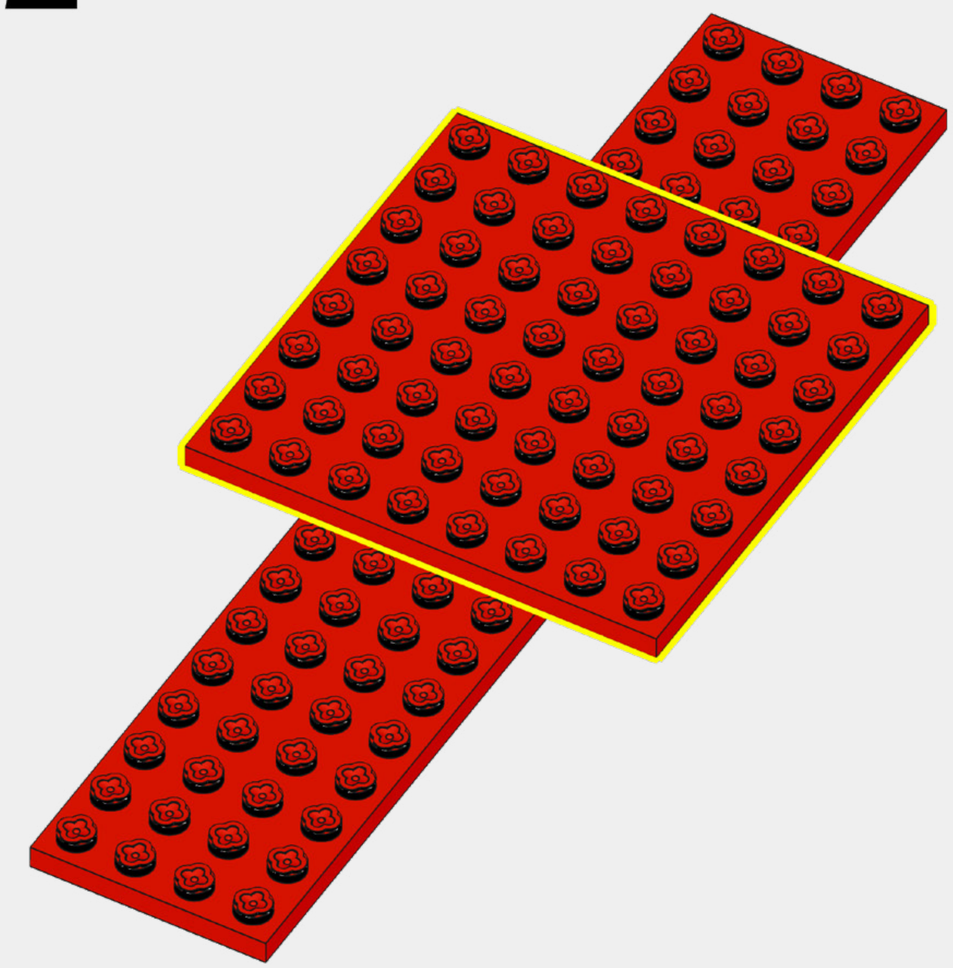

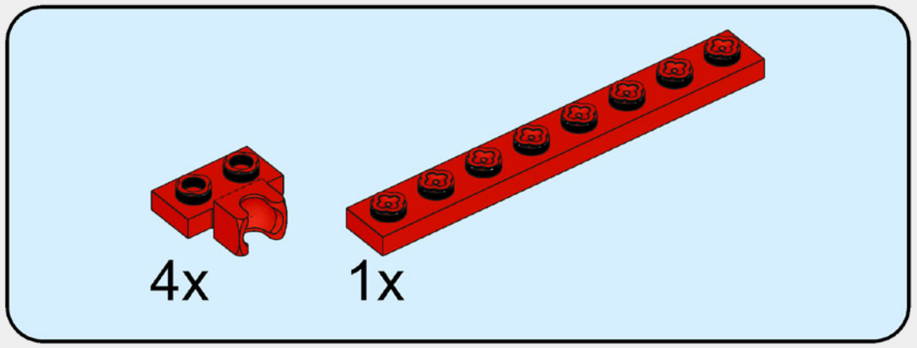

3

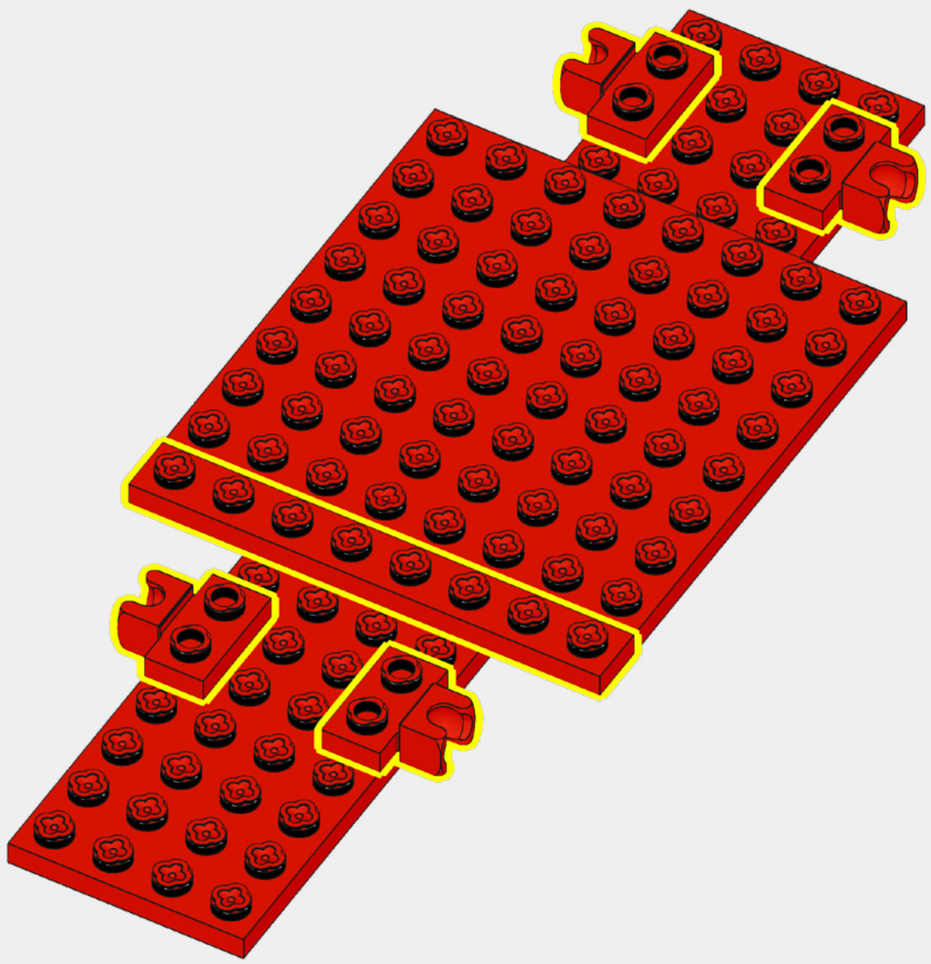

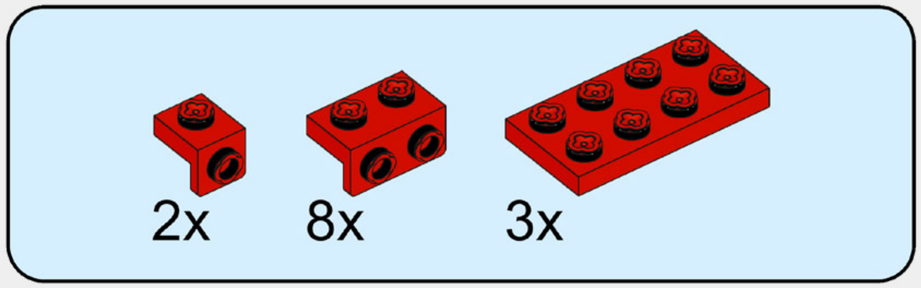

4

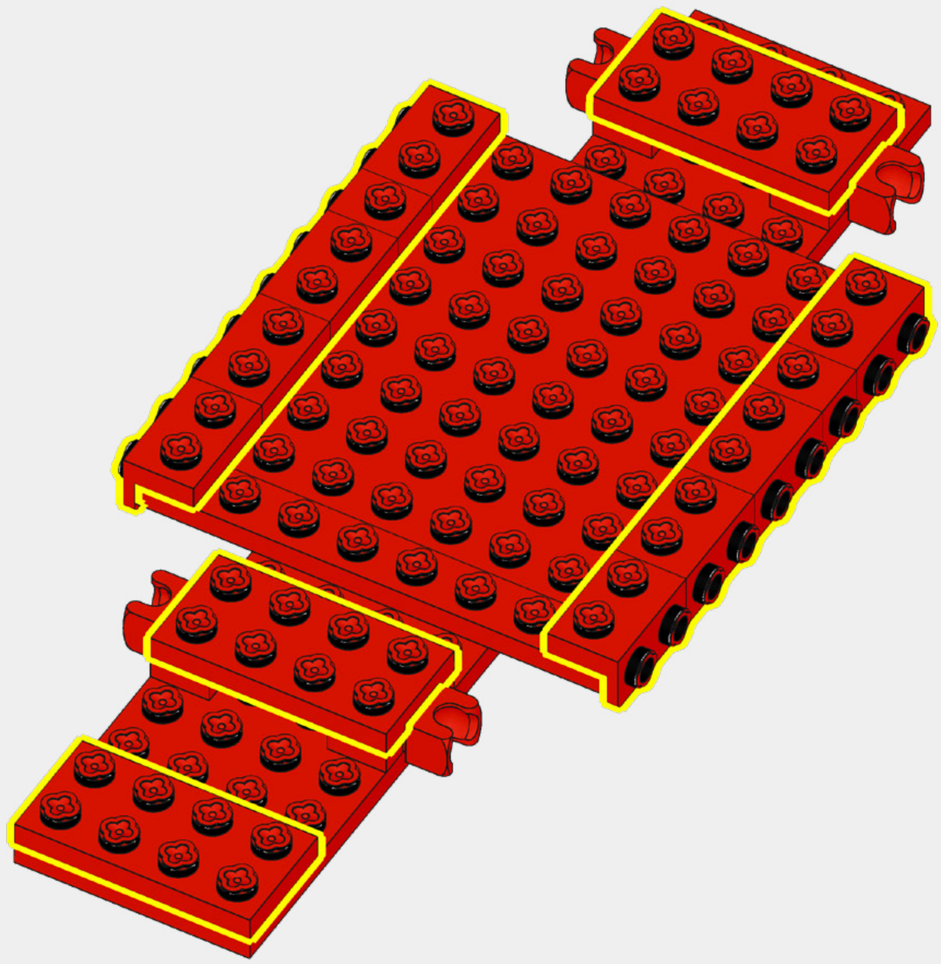

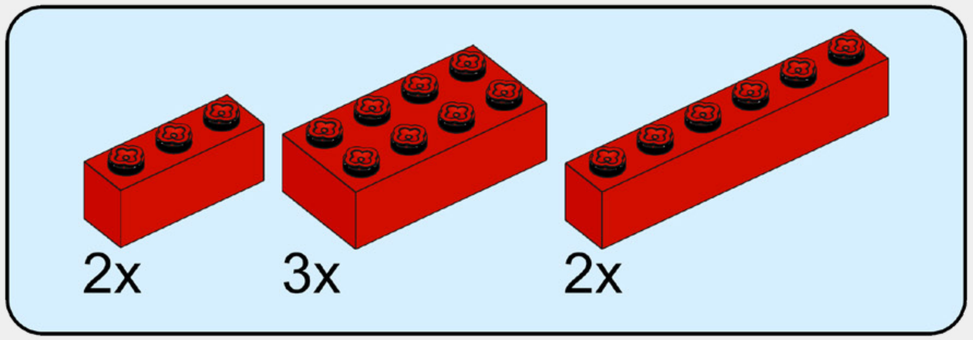

5

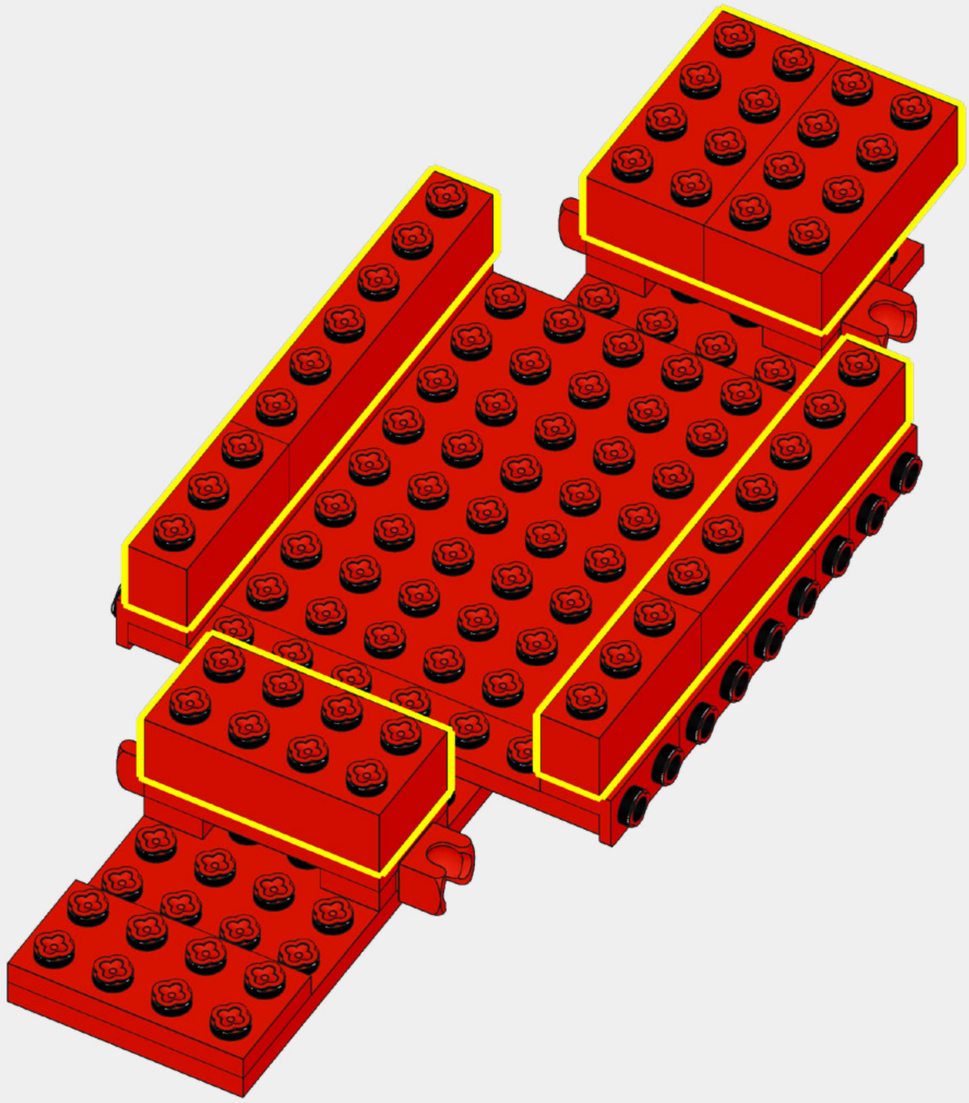

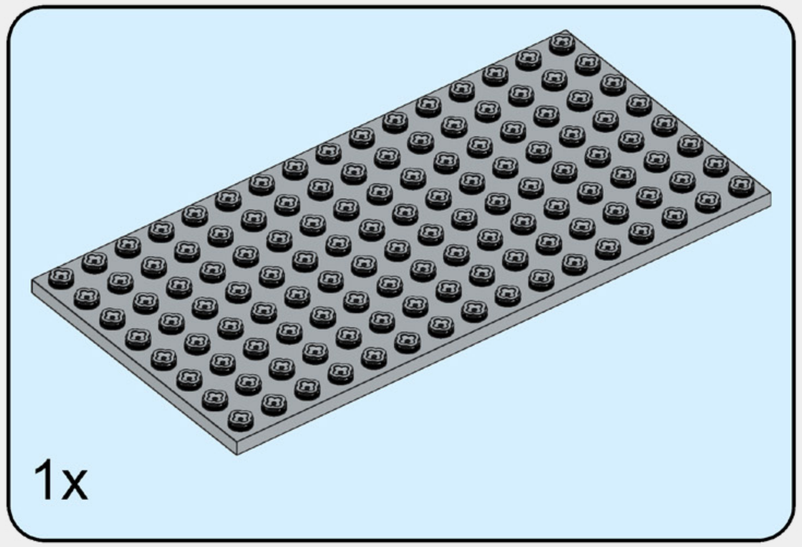

6

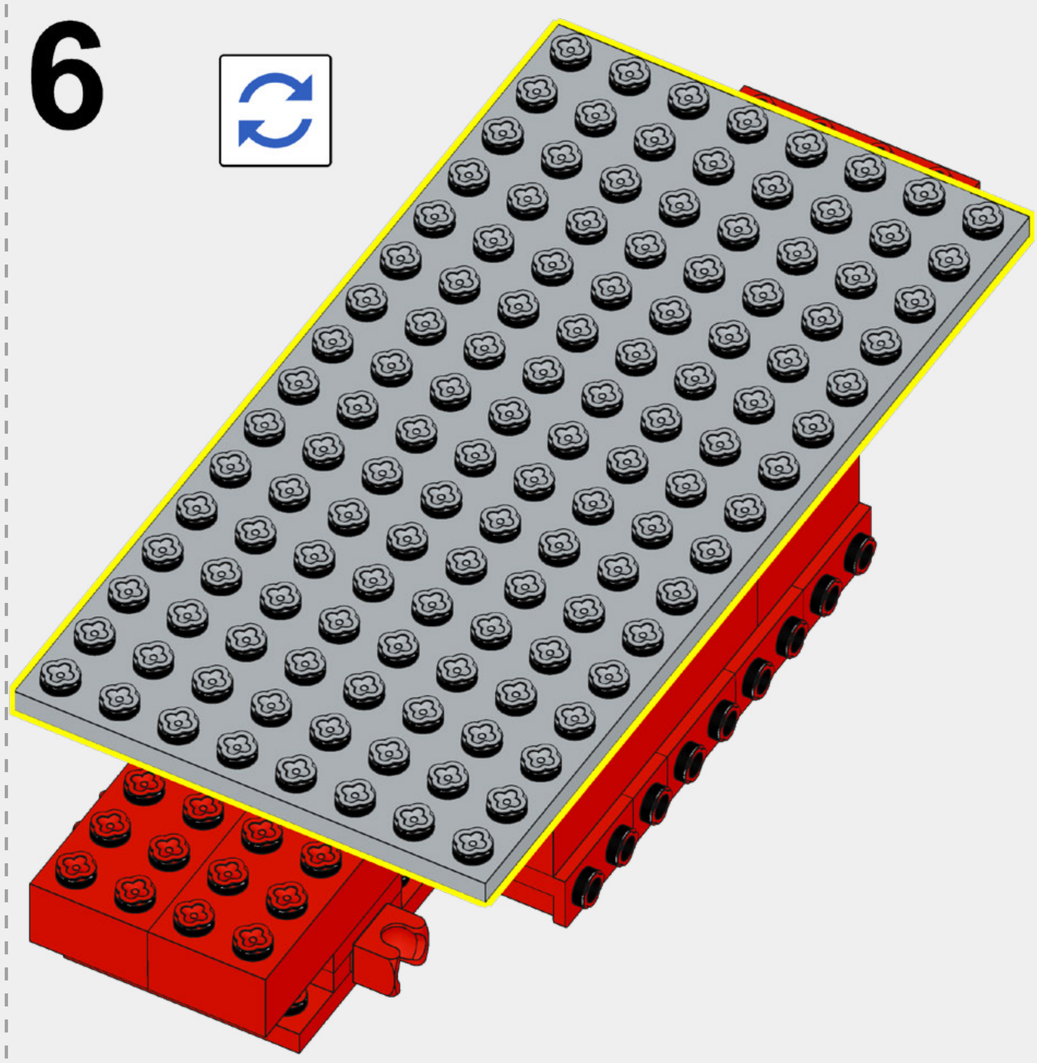

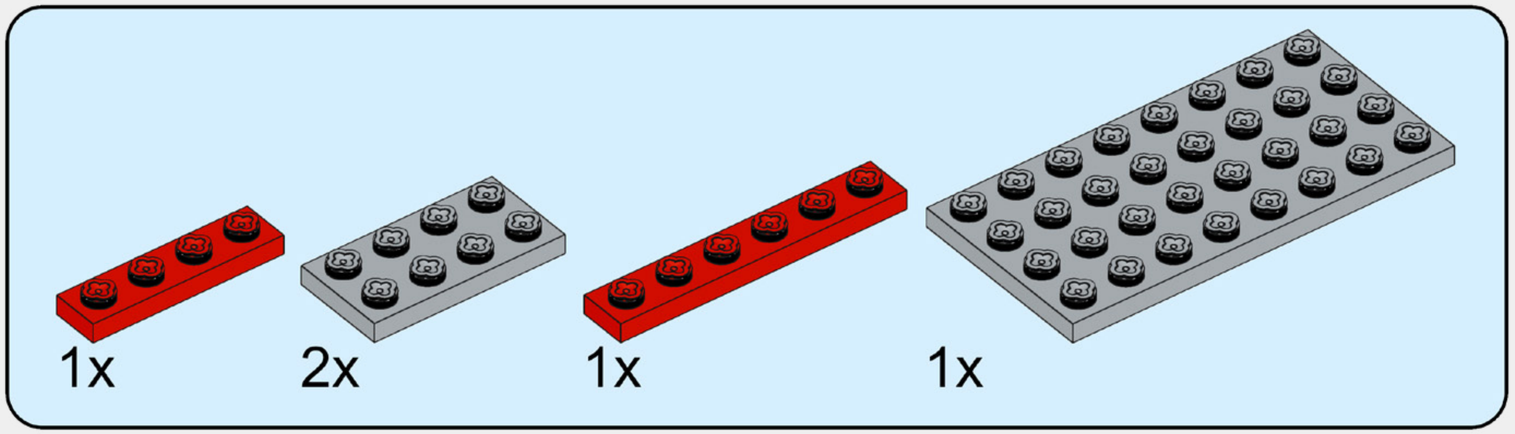

7

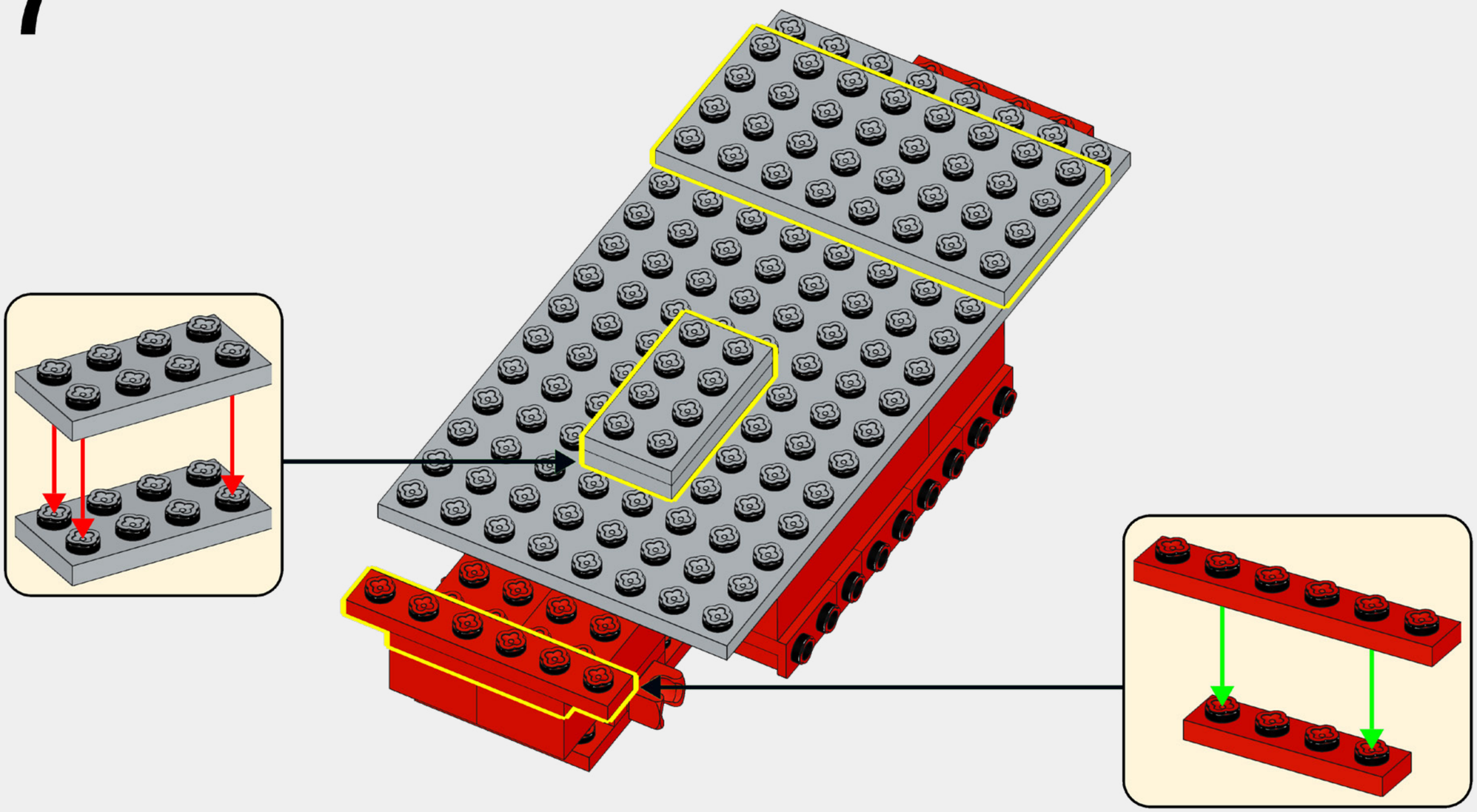

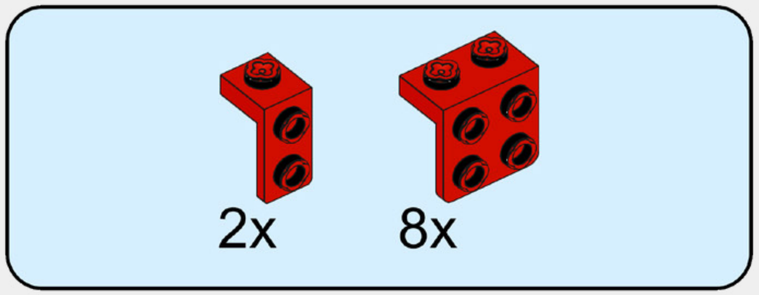

8

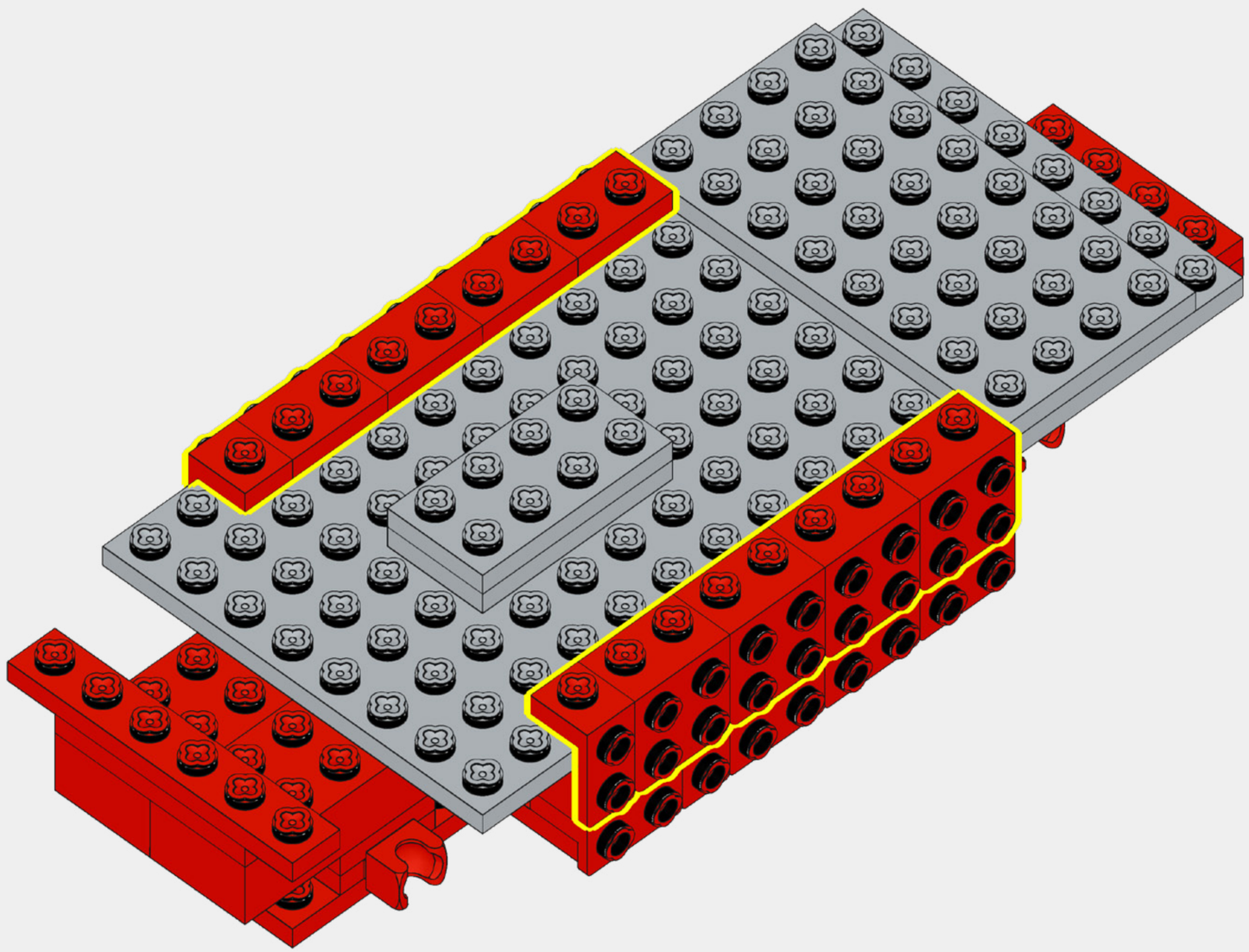

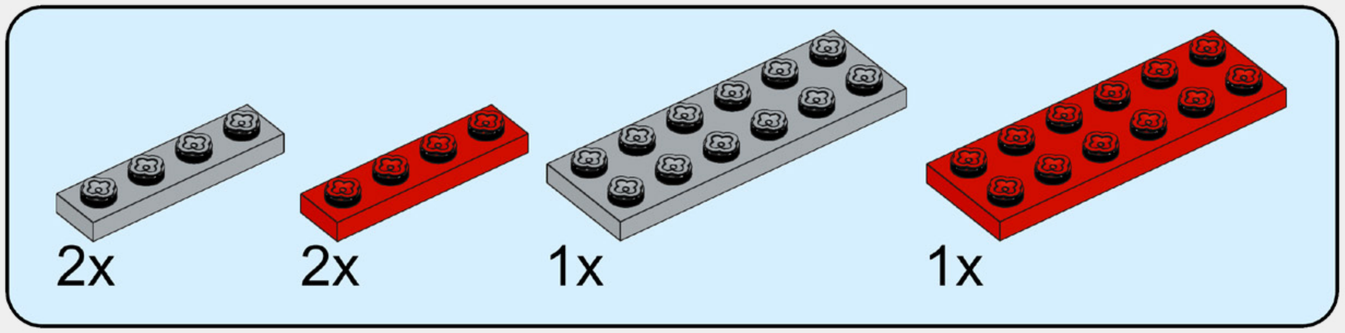

9

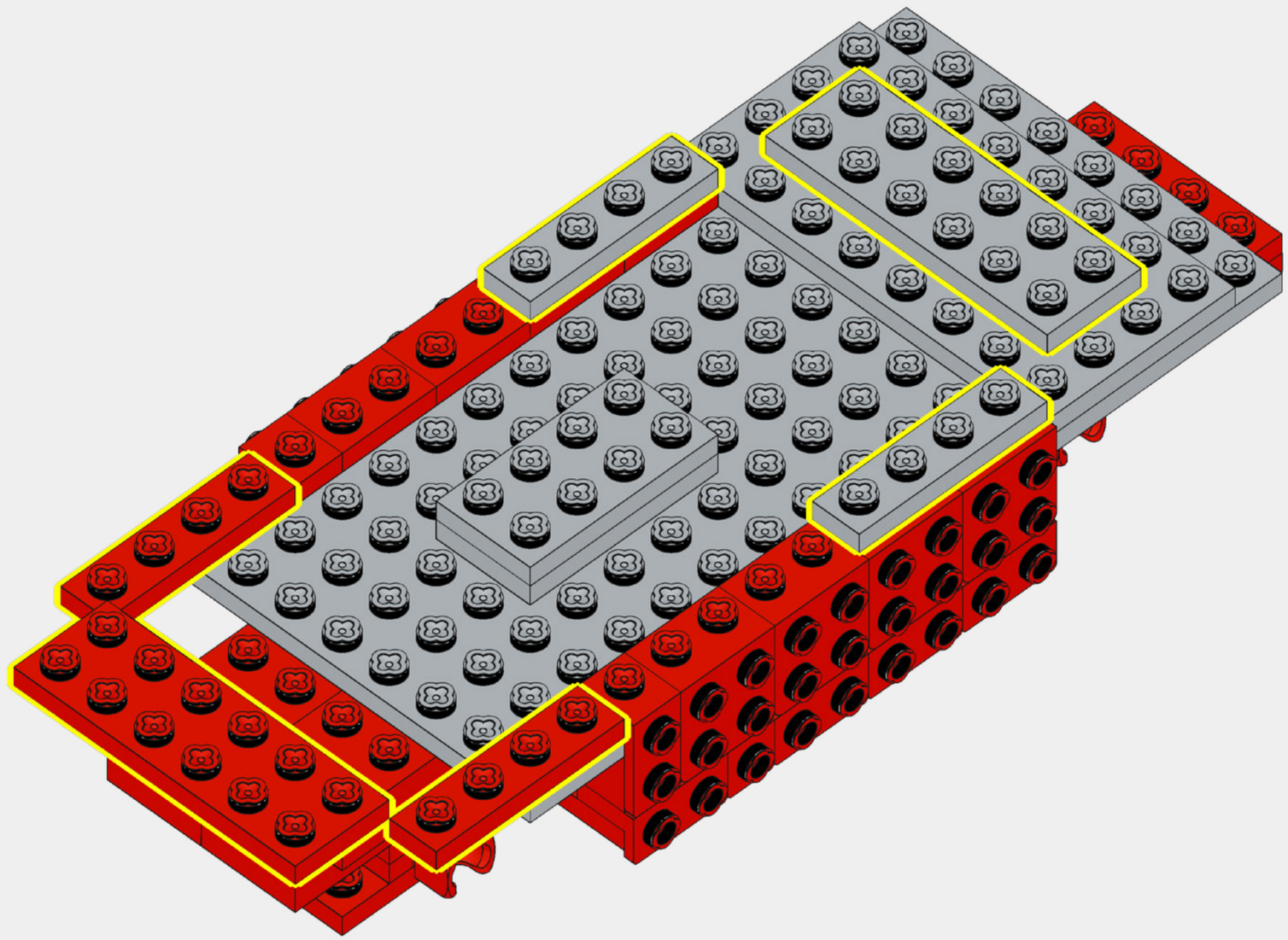

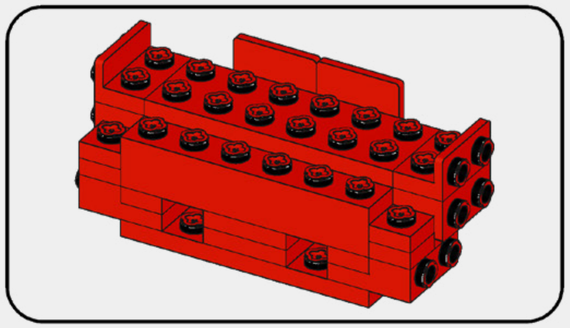

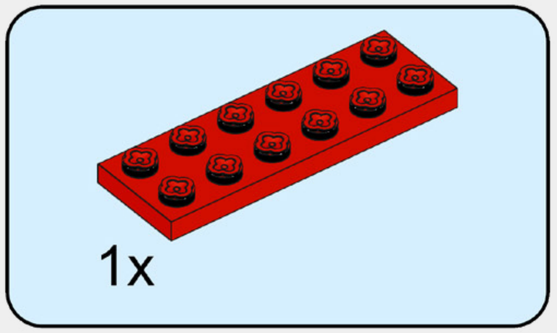

10

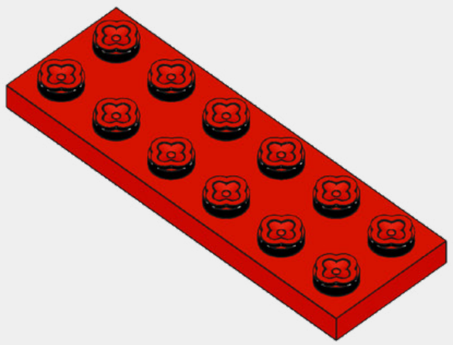

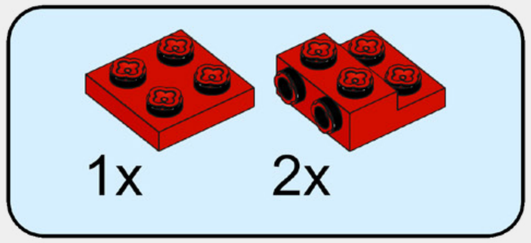

11

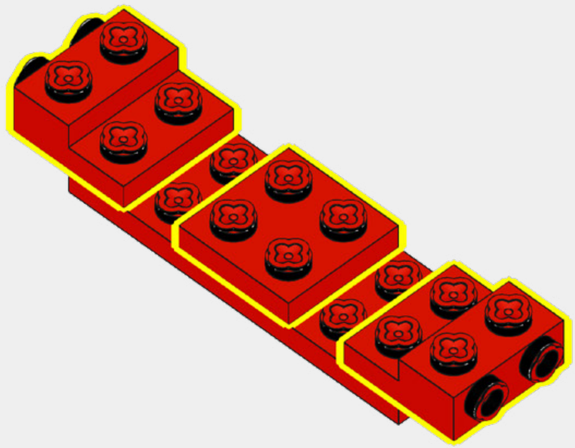

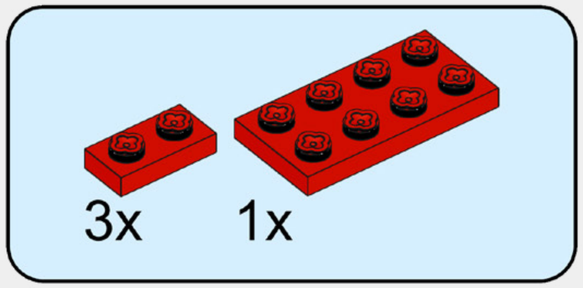

12

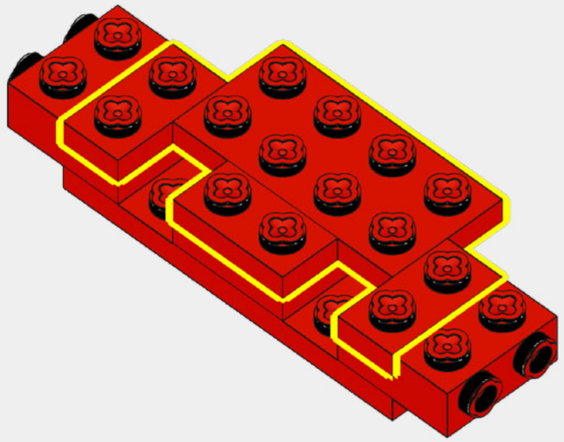

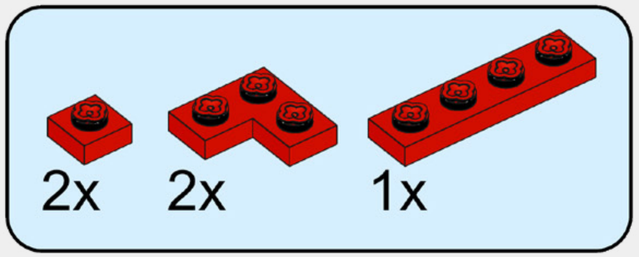

13

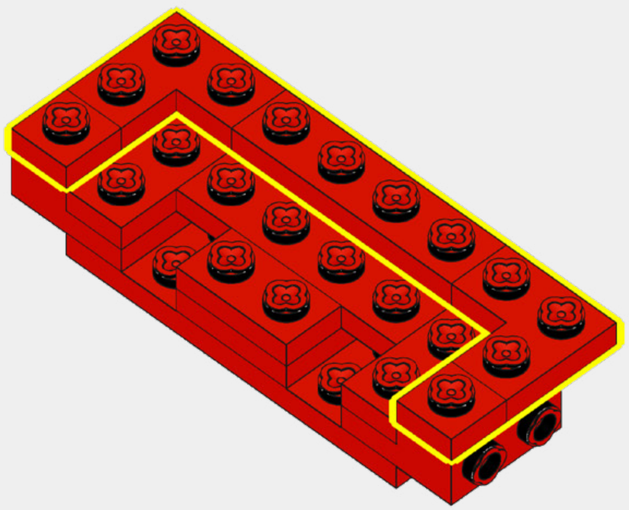

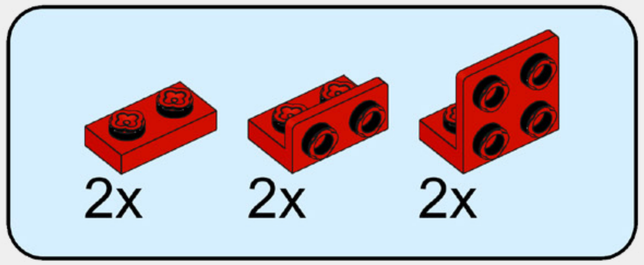

14

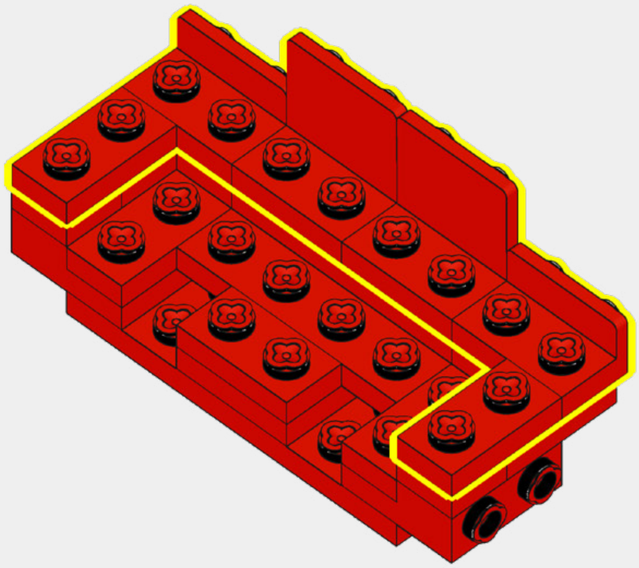

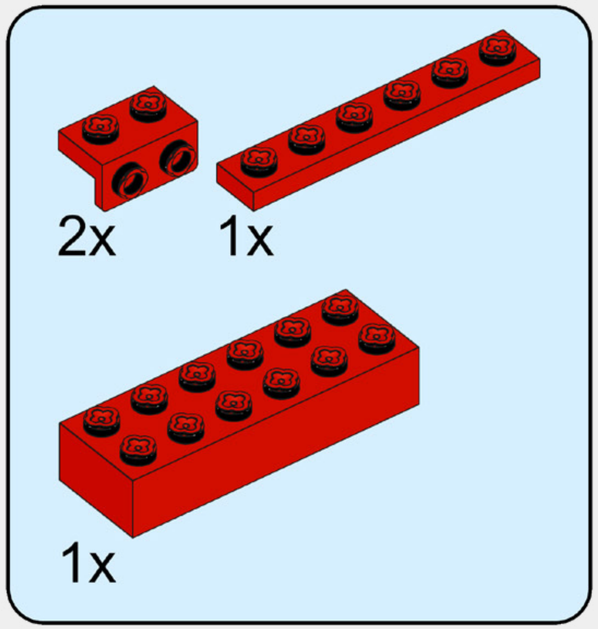

15

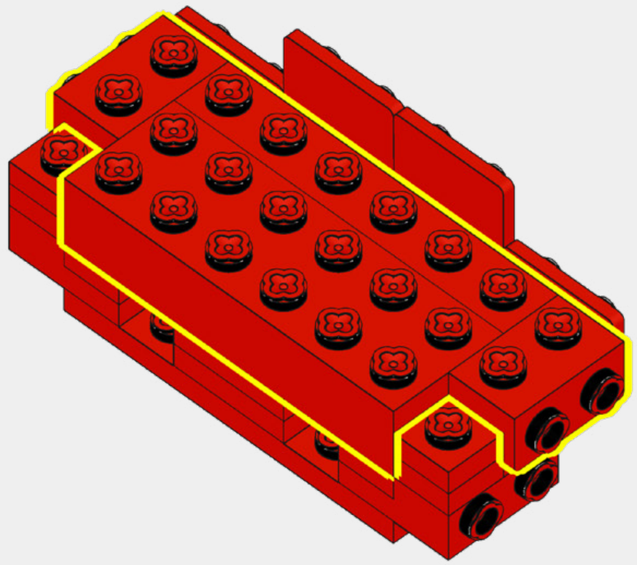

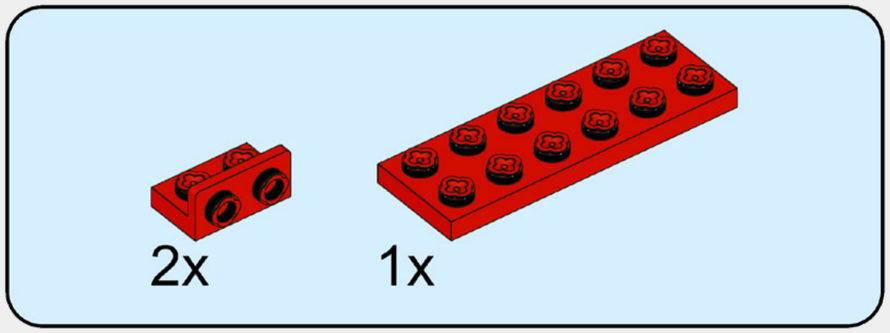

16

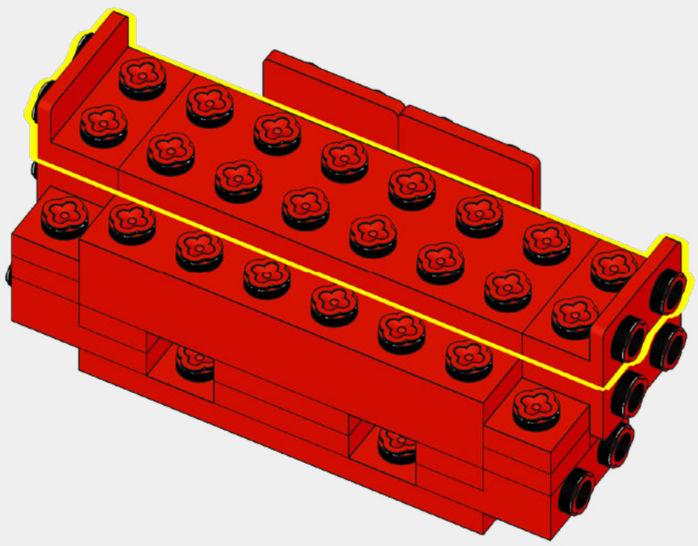

17

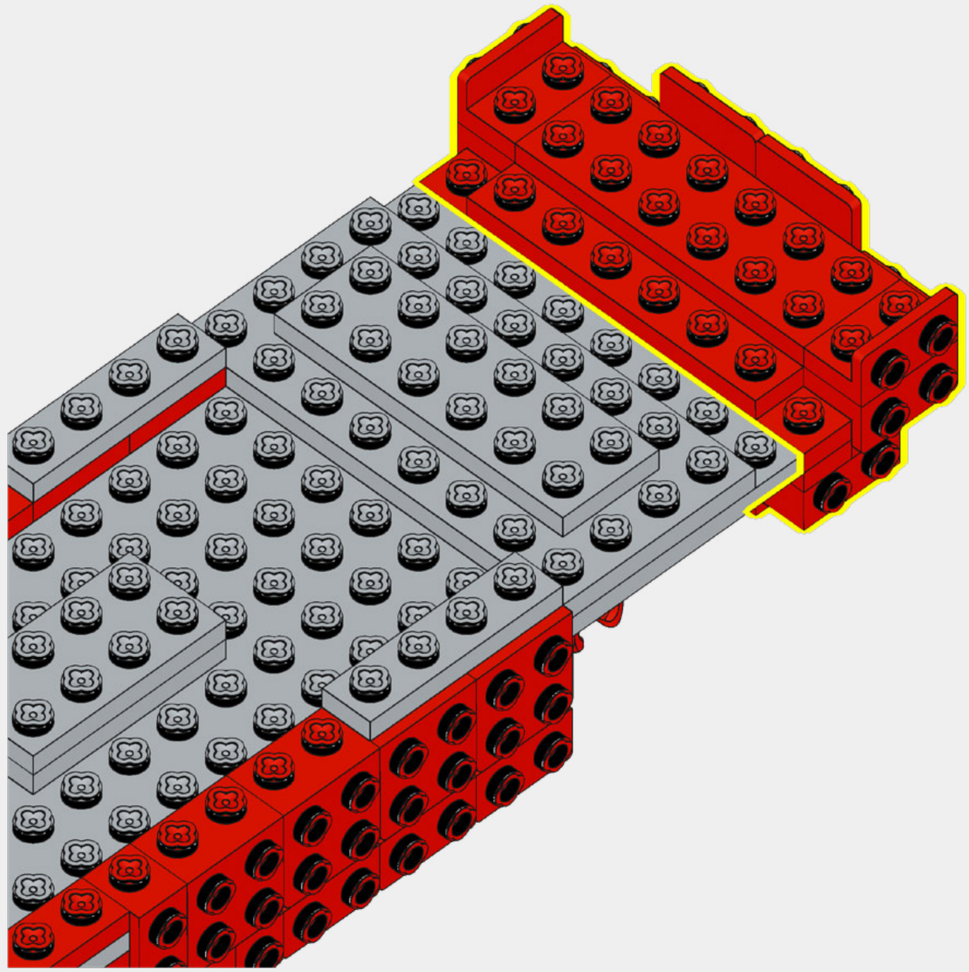

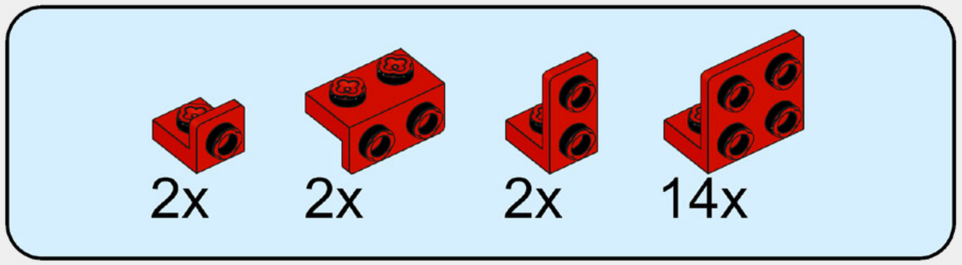

18

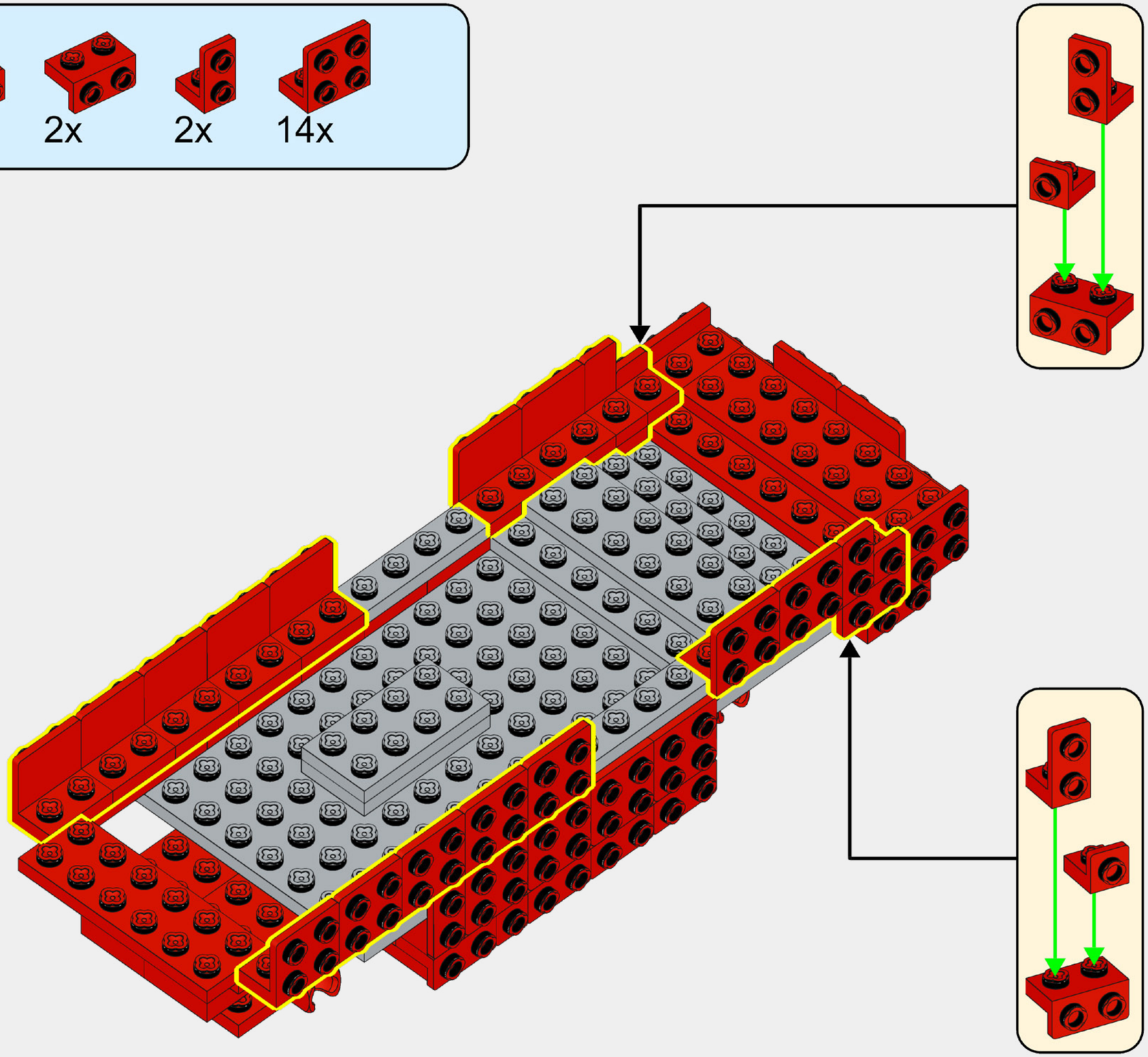

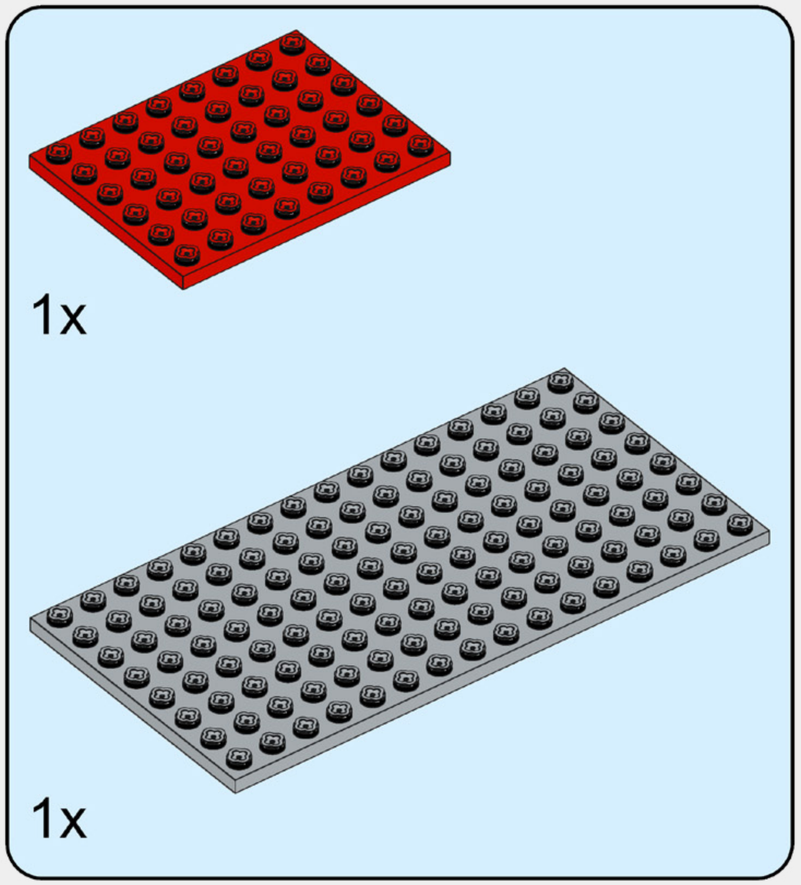

19

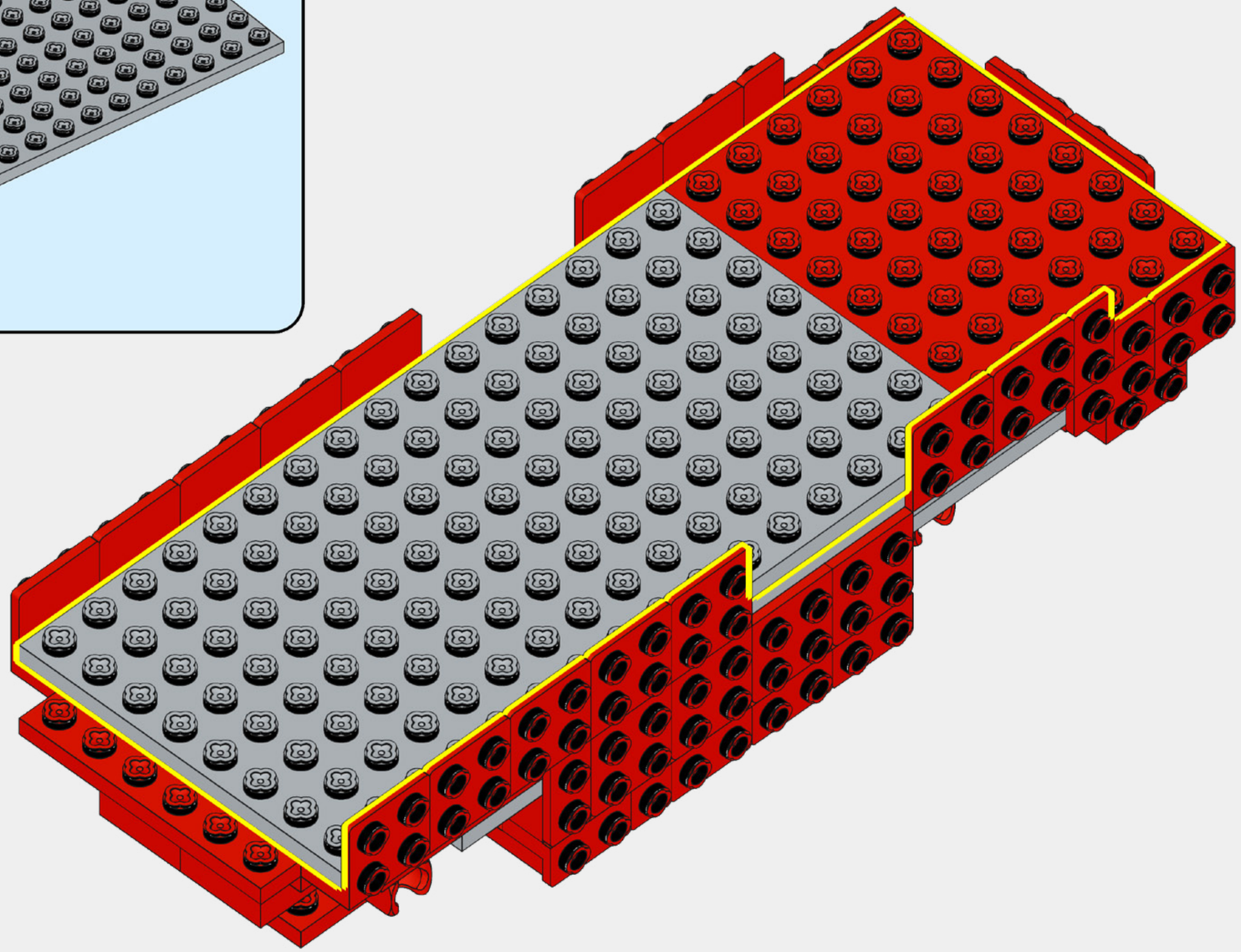

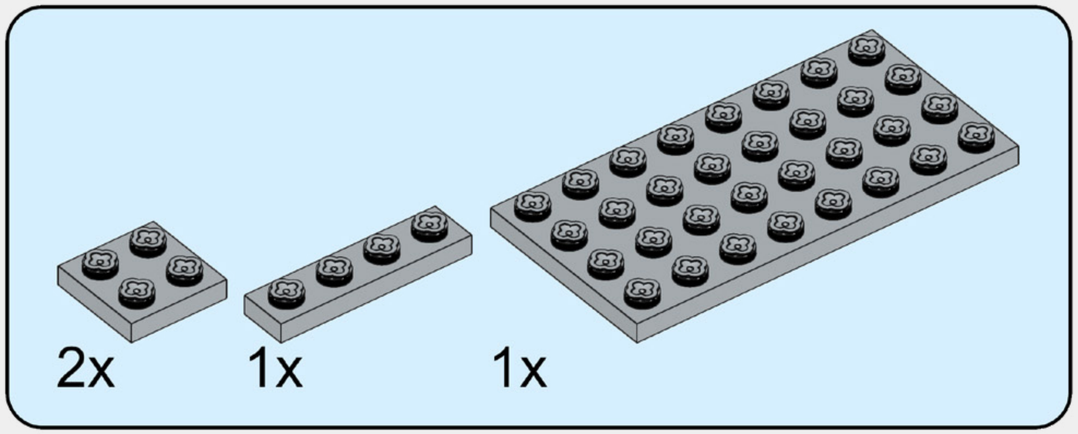

20

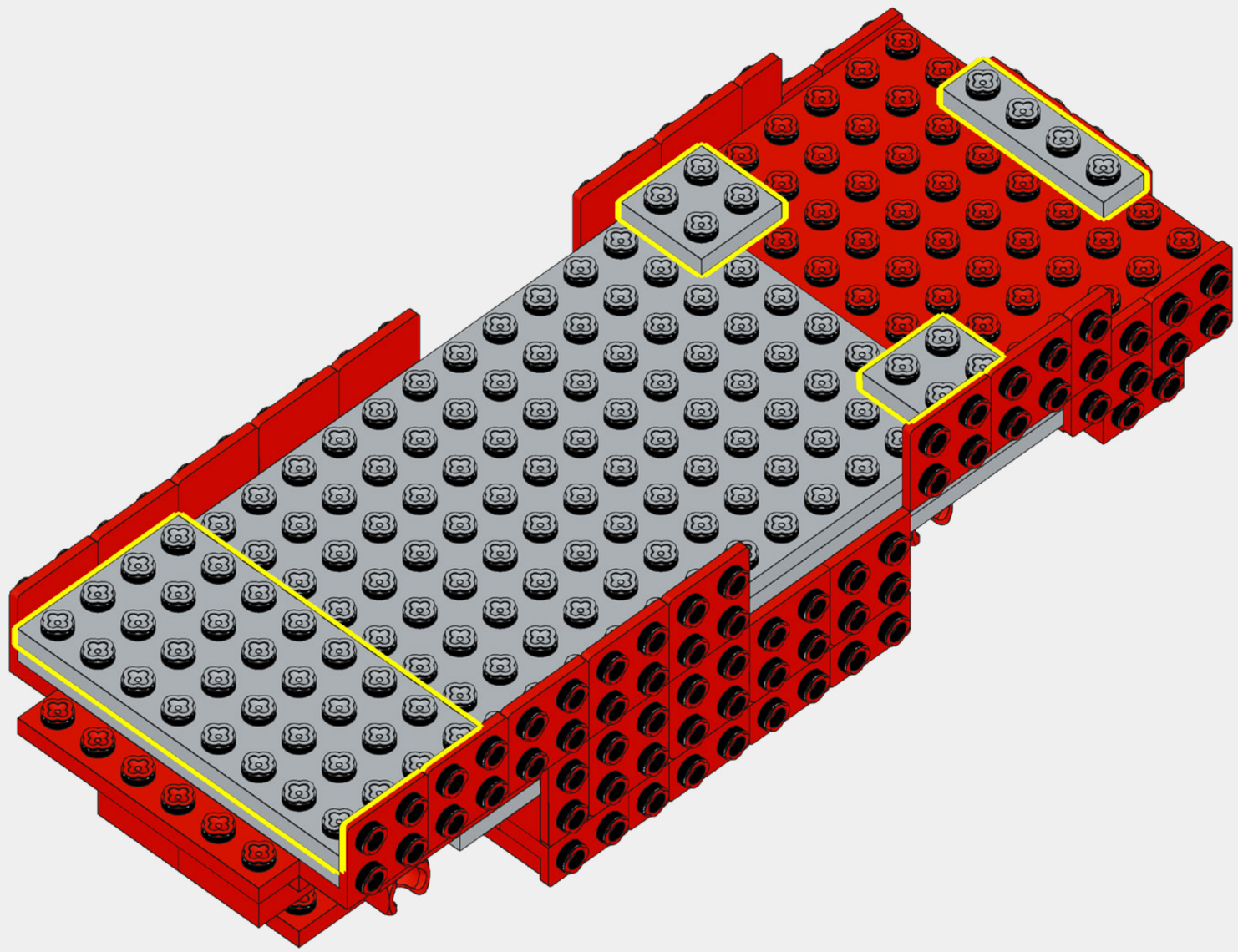

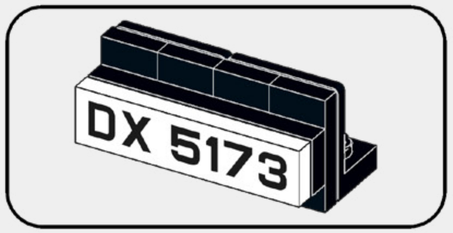

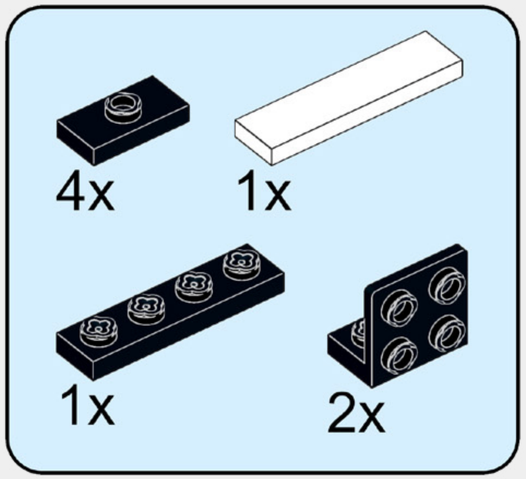

21

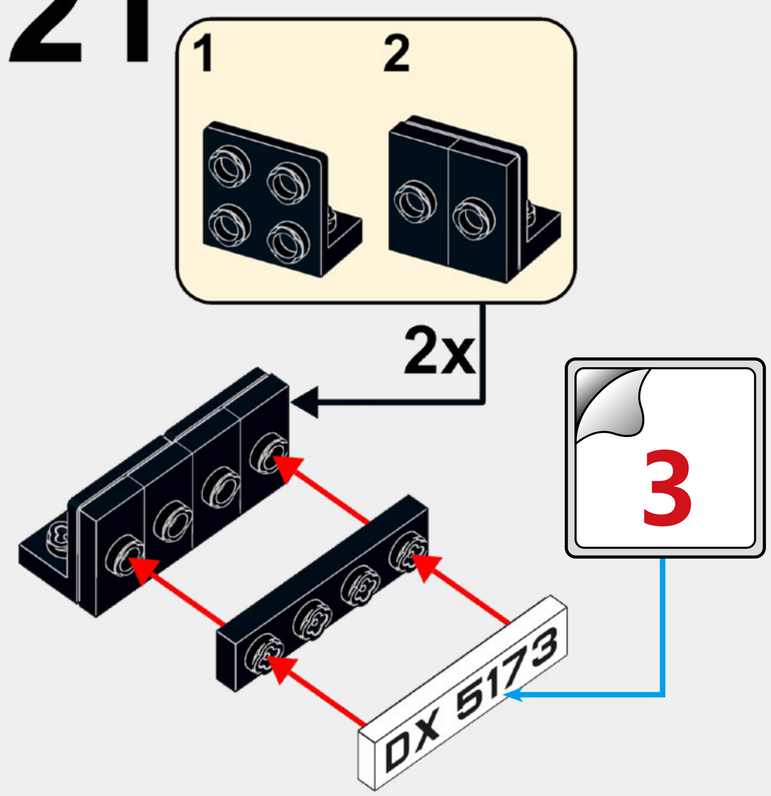

22

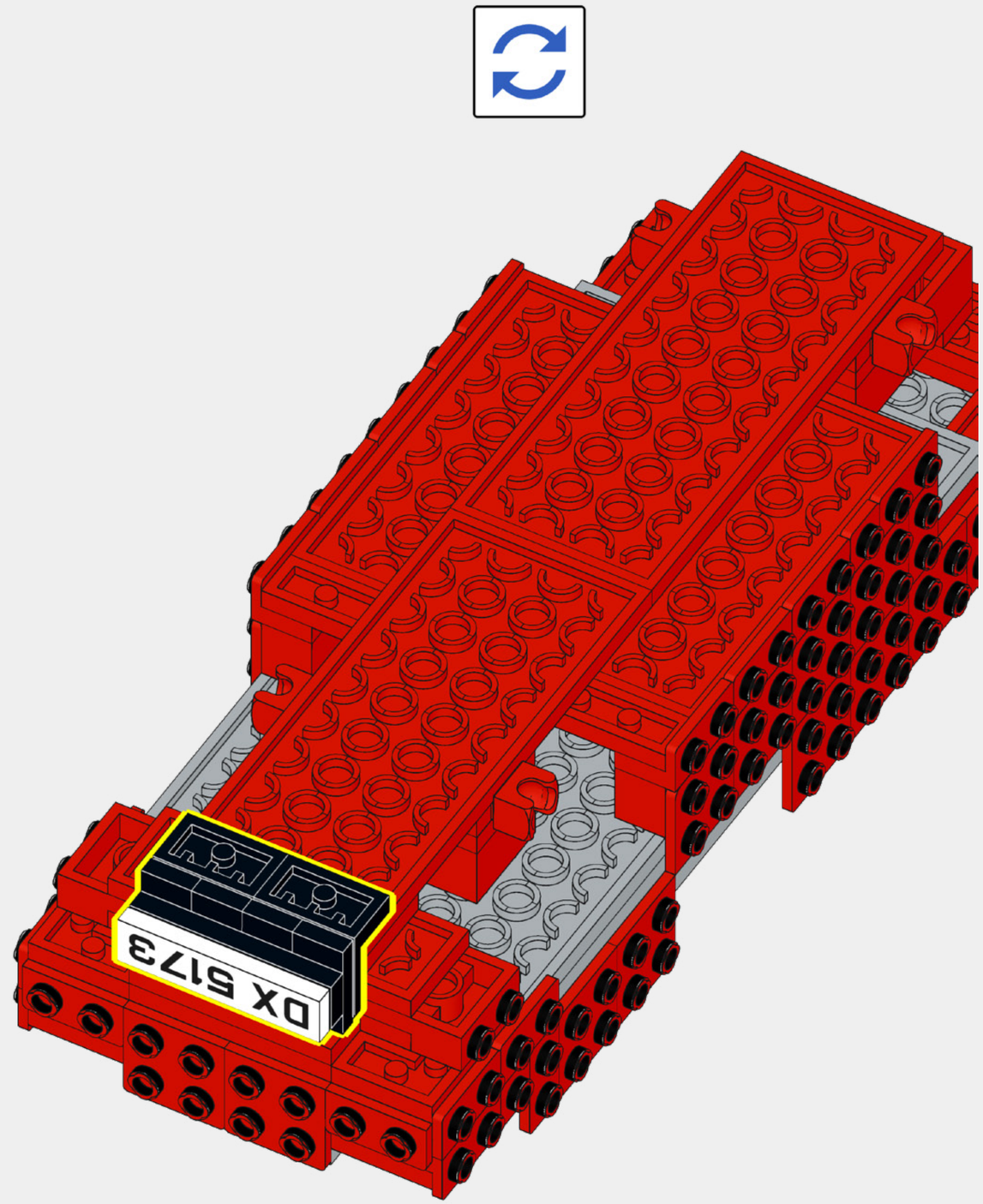

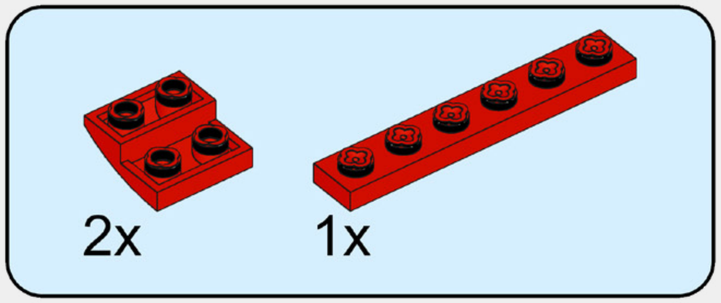

23

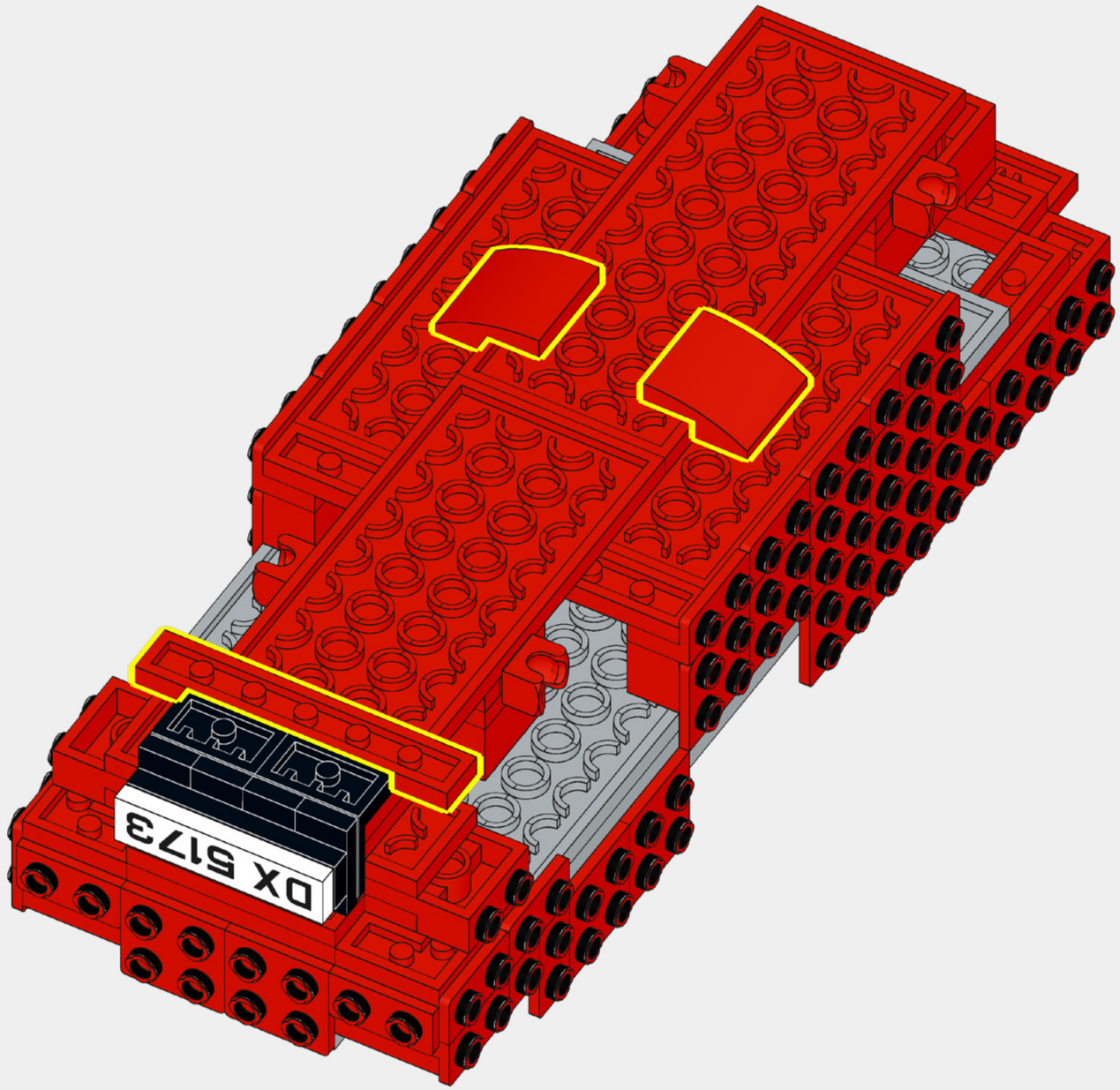

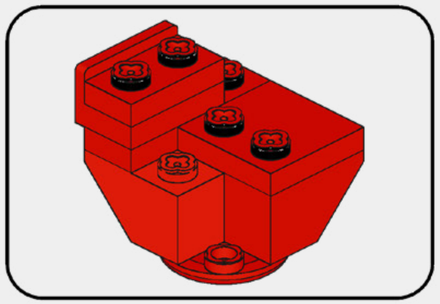

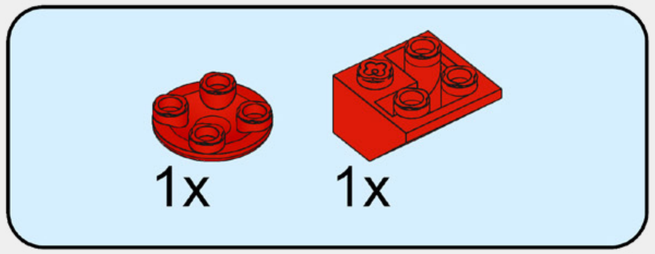

24

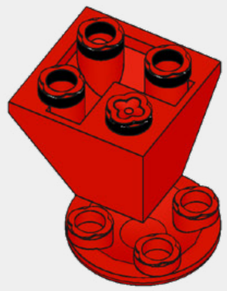

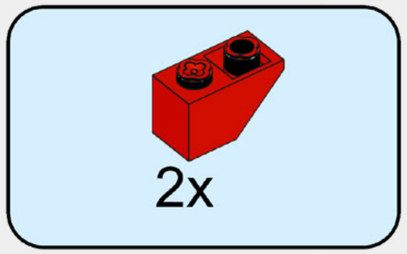

25

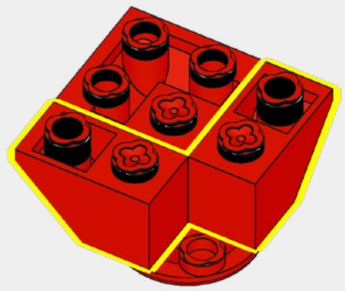

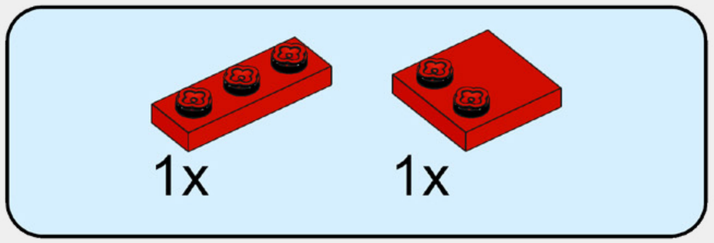

26

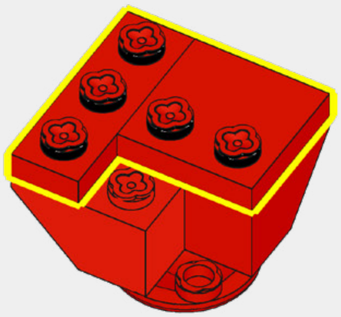

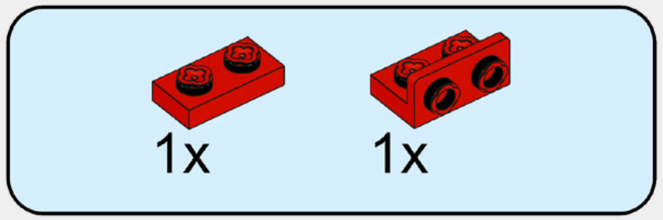

27

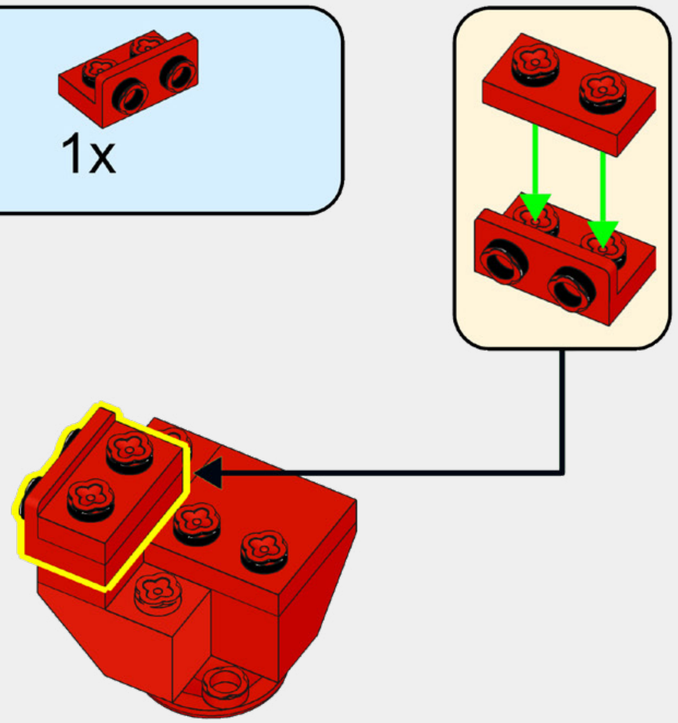

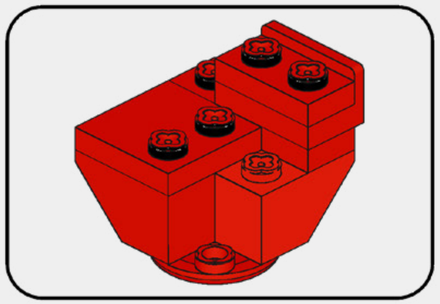

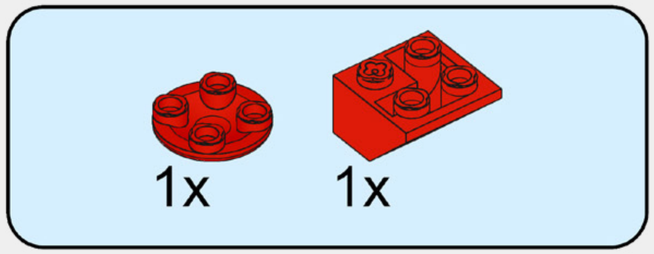

28

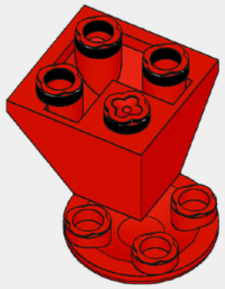

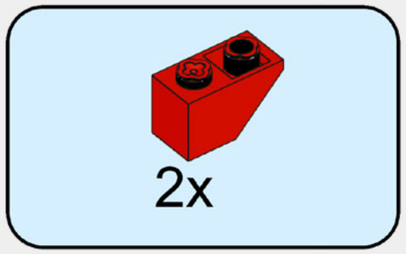

29

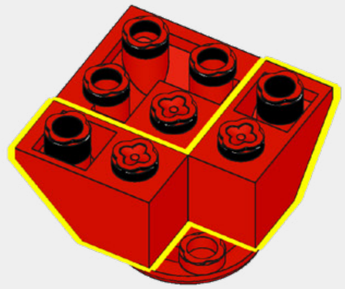

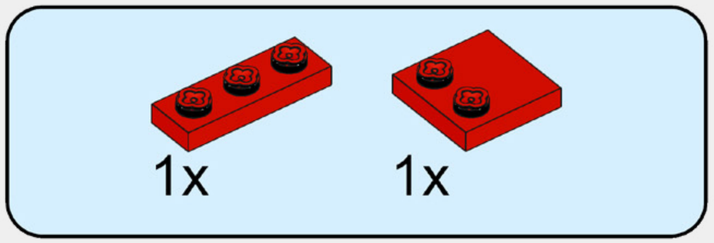

30

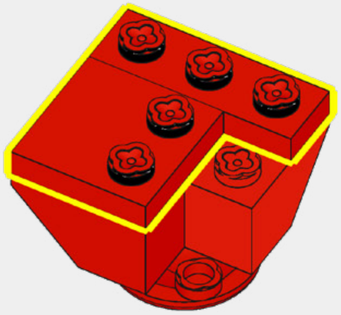

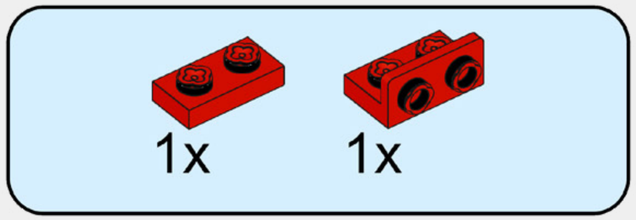

31

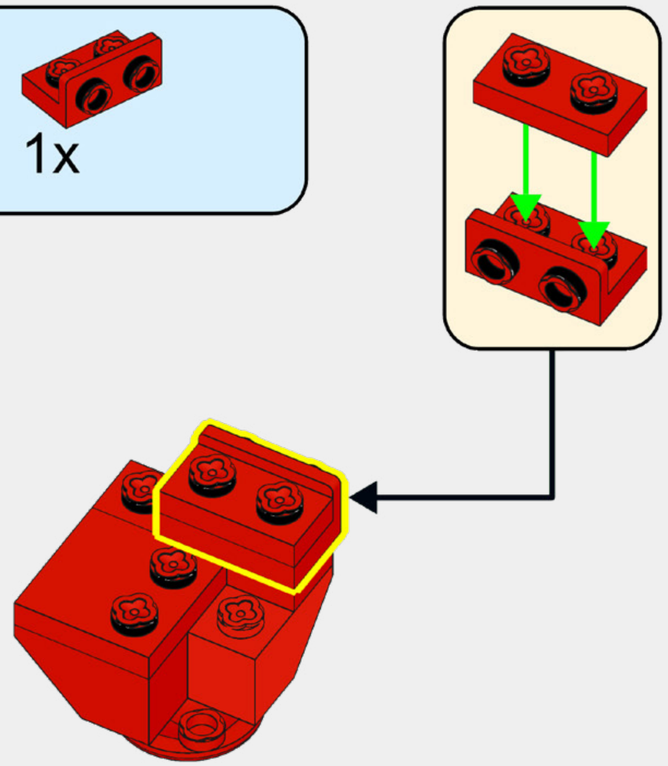

32

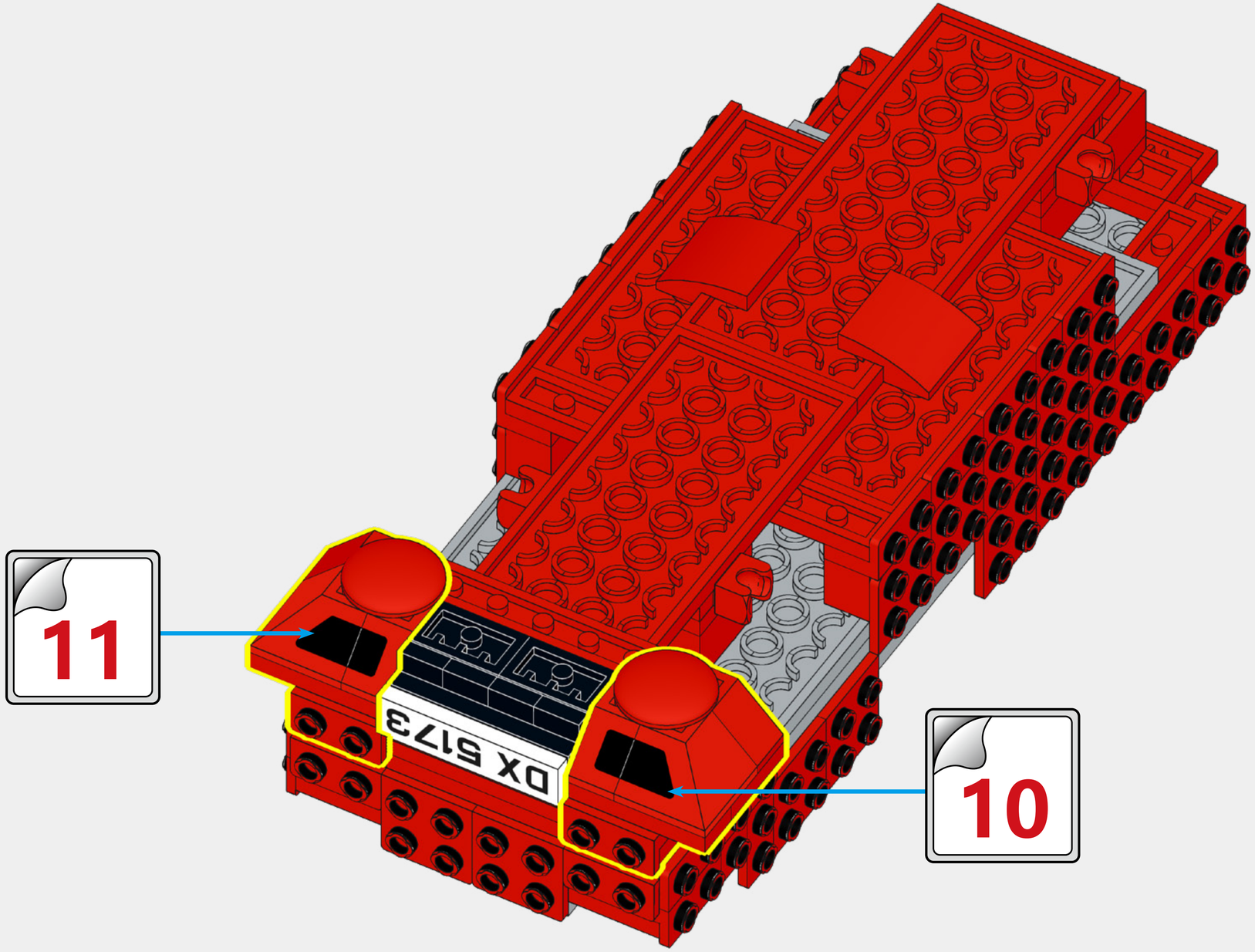

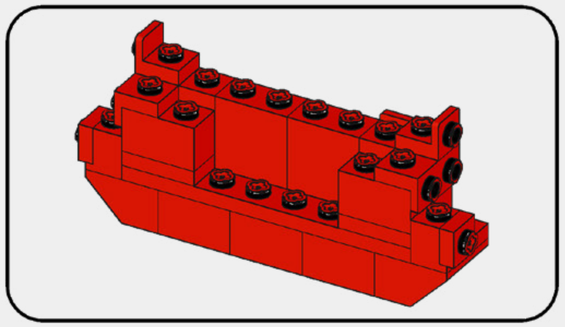

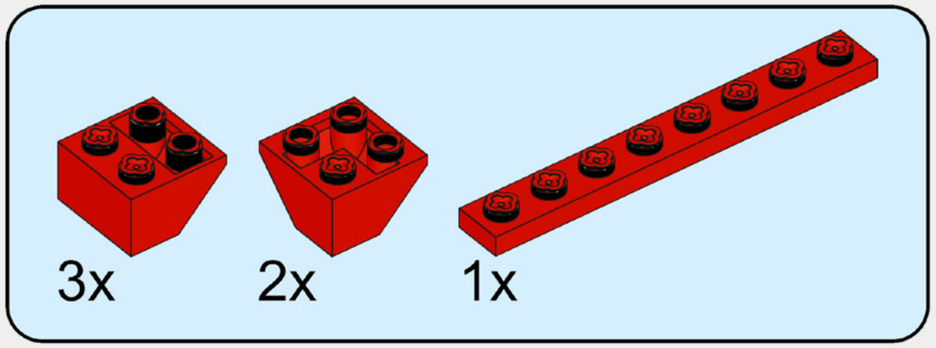

33

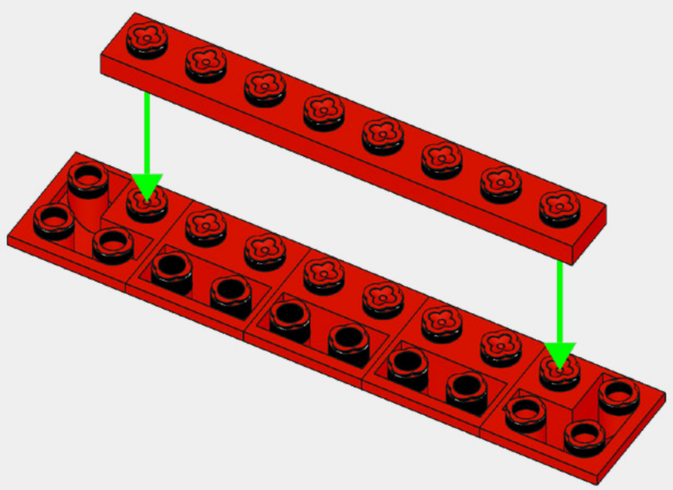

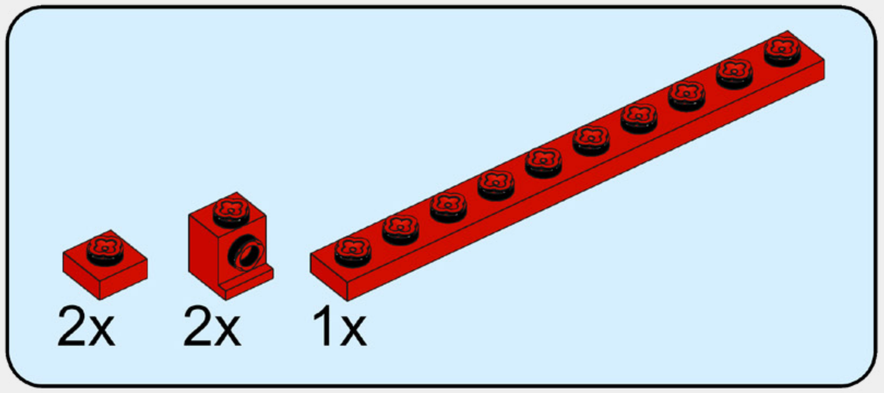

34

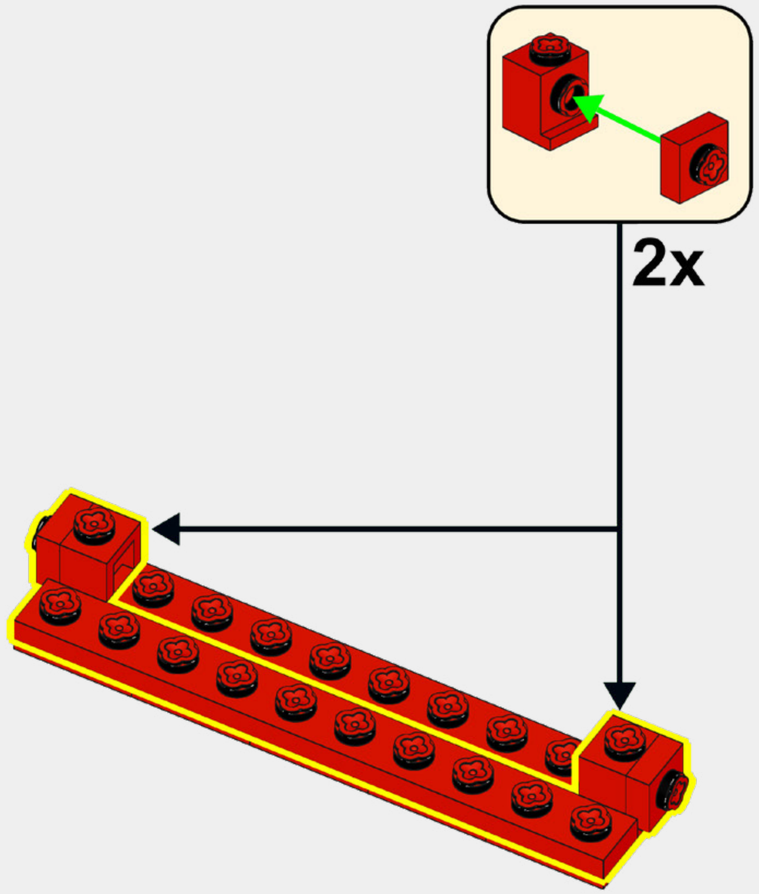

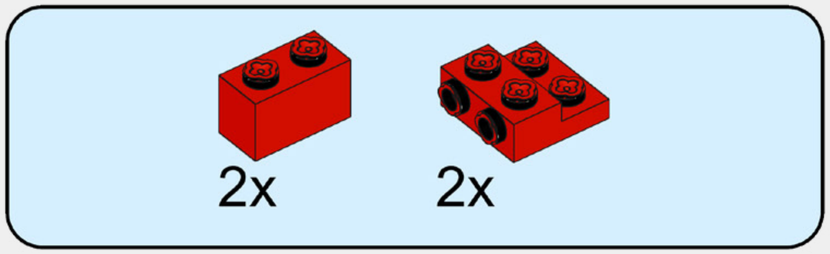

35

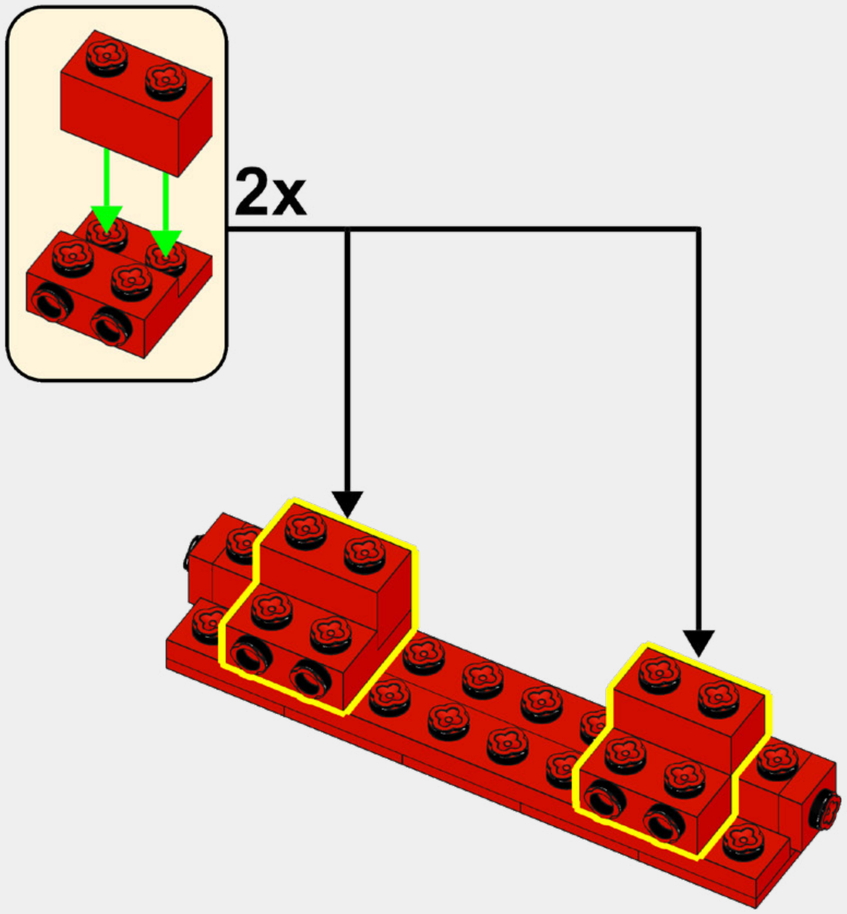

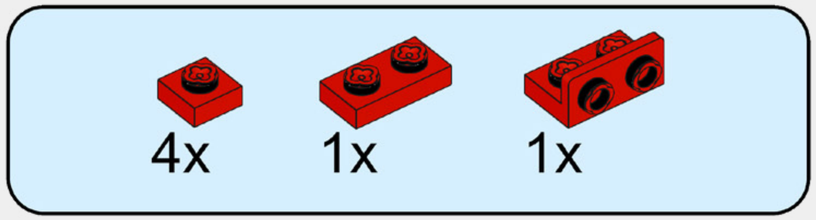

36

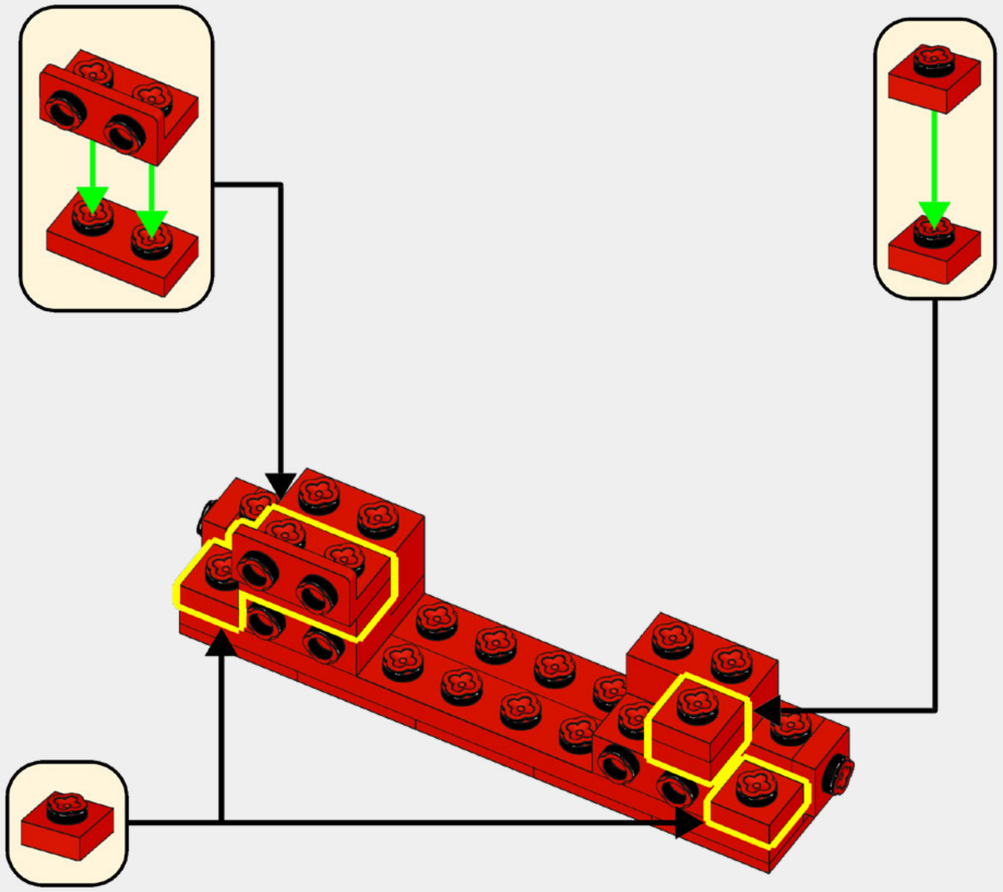

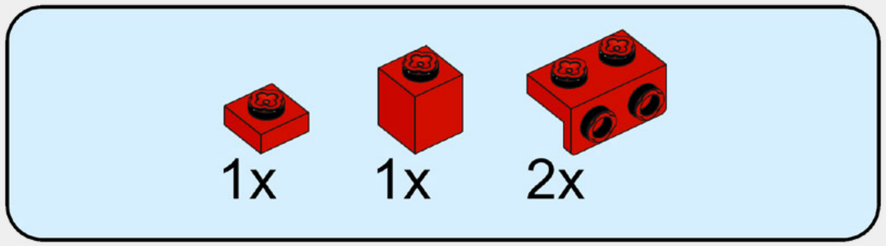

37

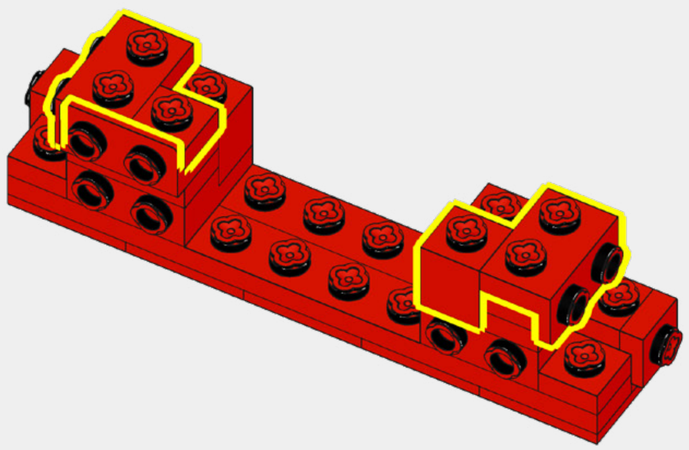

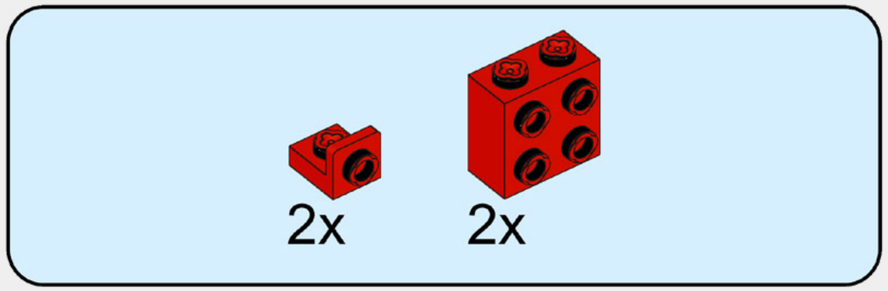

38

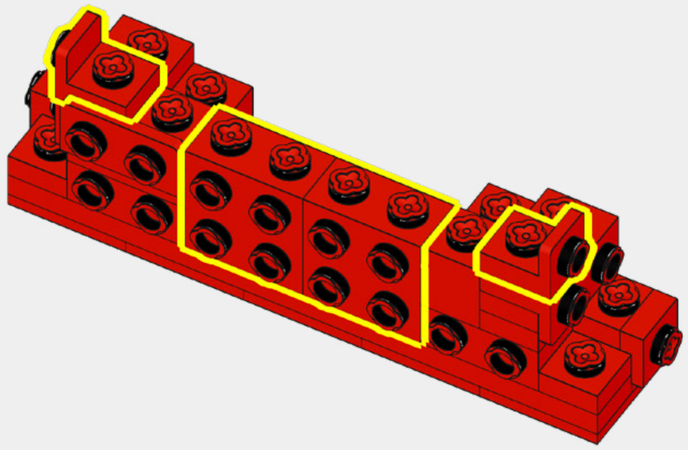

39

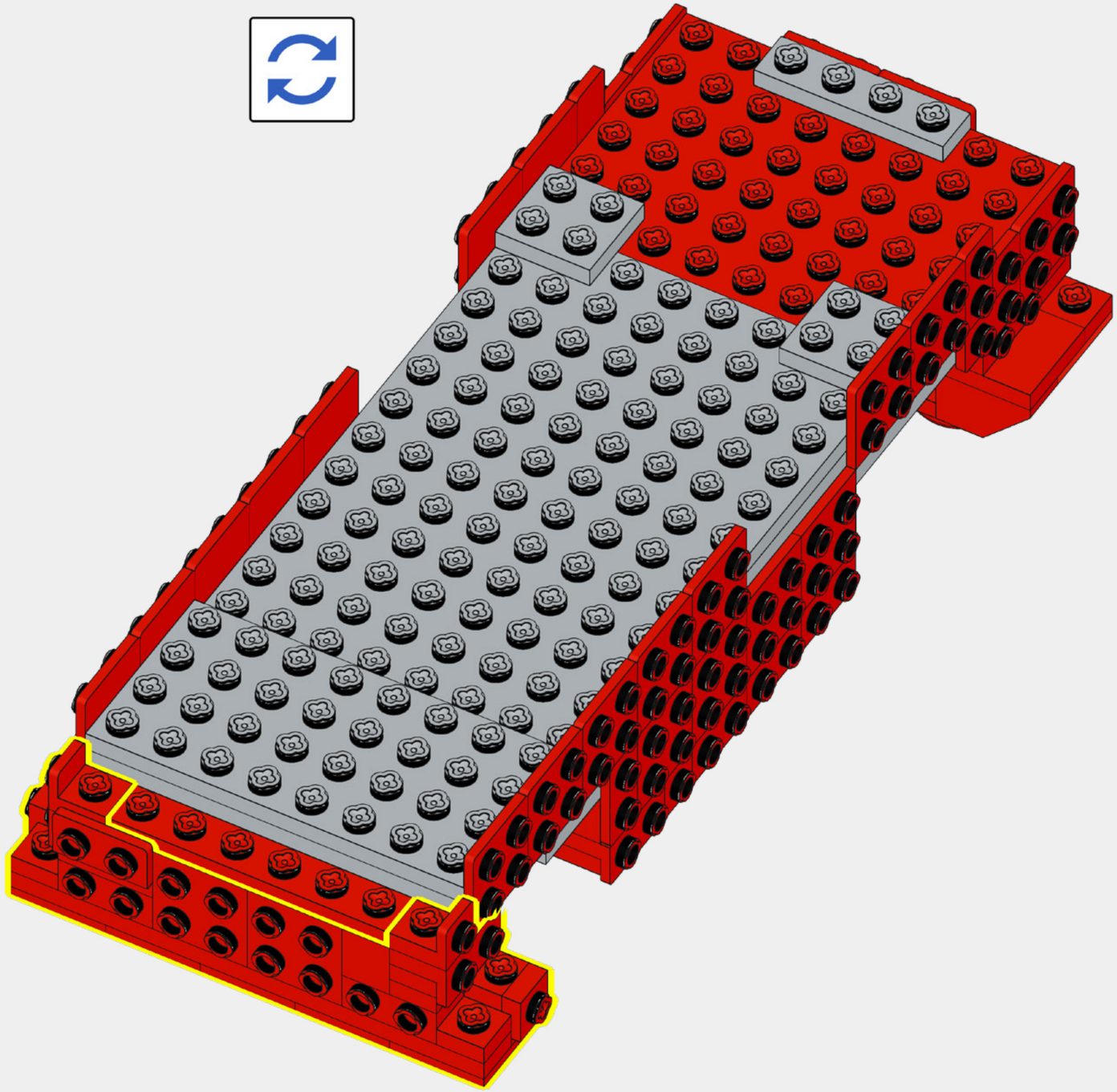

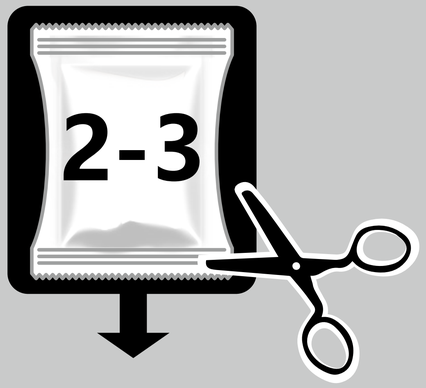
2-3

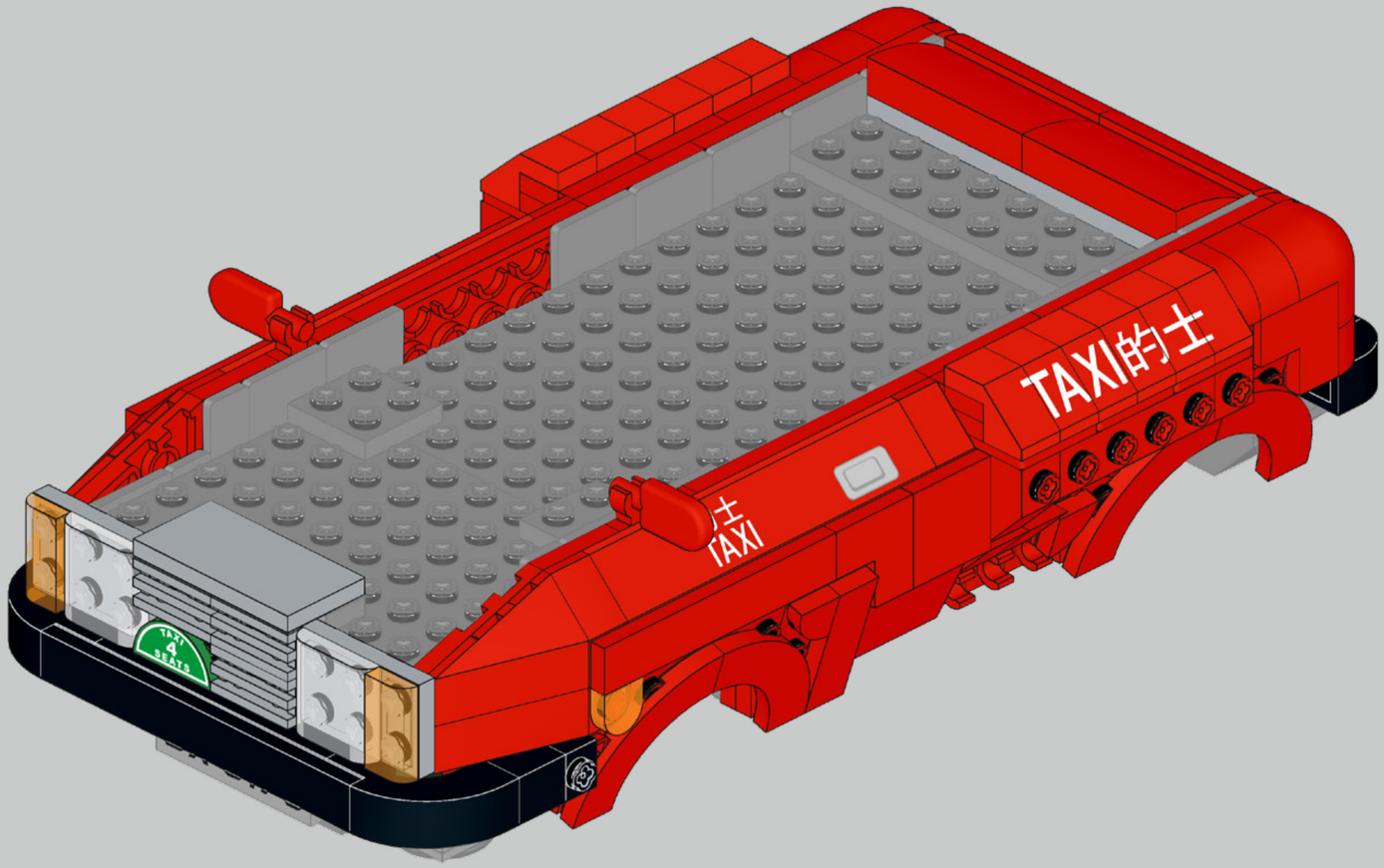
TAXI的士
的士
TAXI
TAXI
4
SEATS

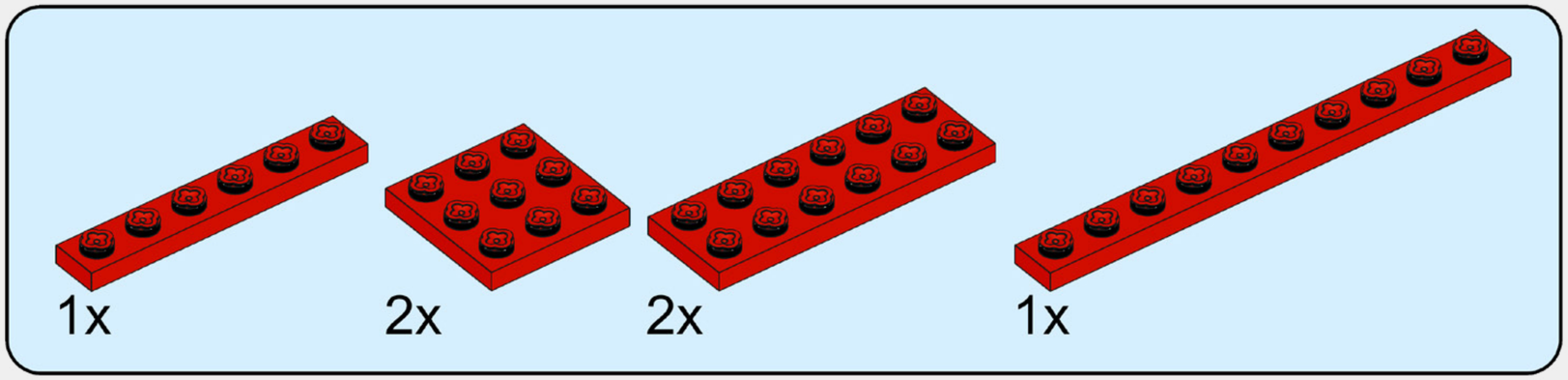

40

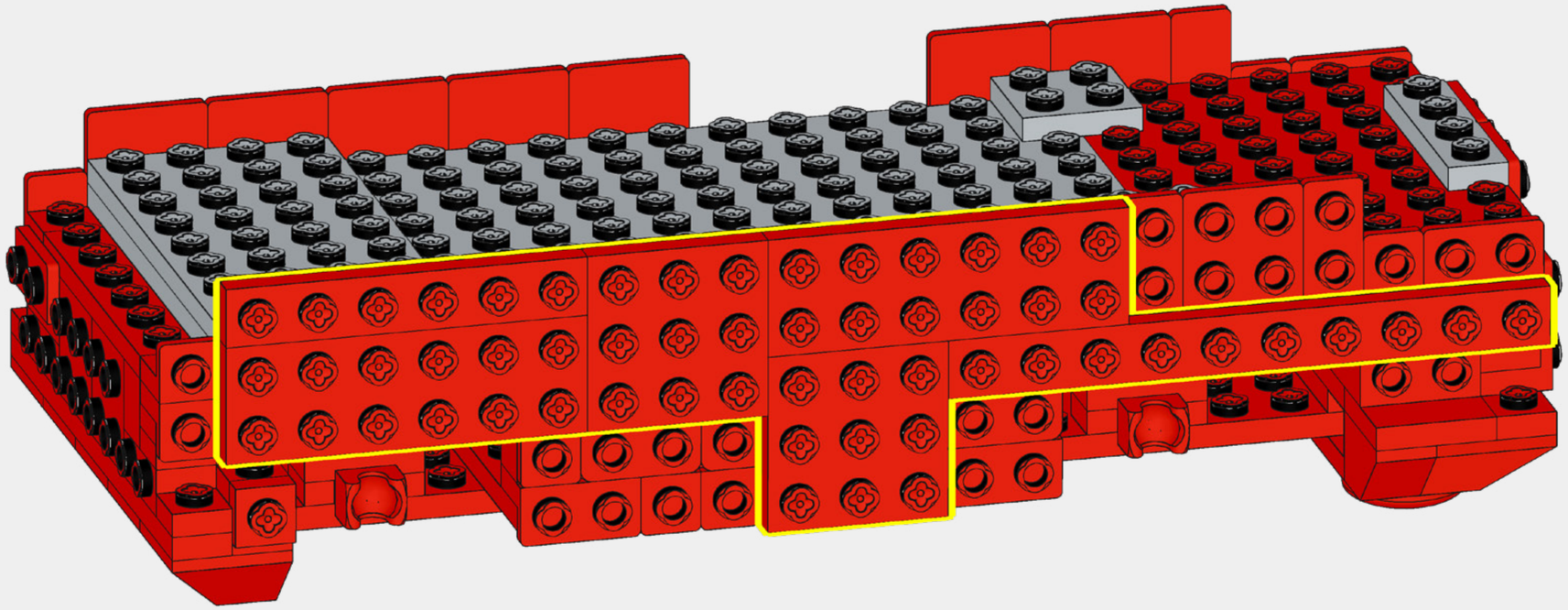

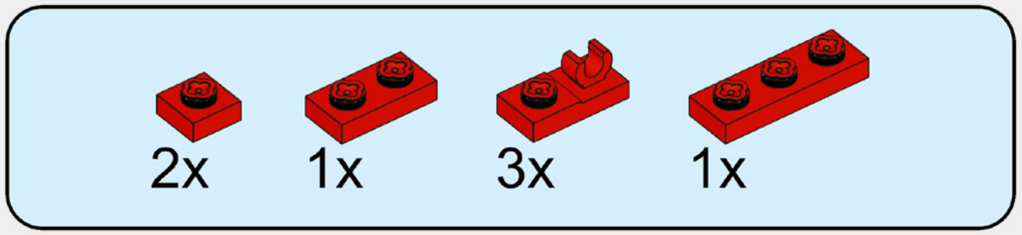

41

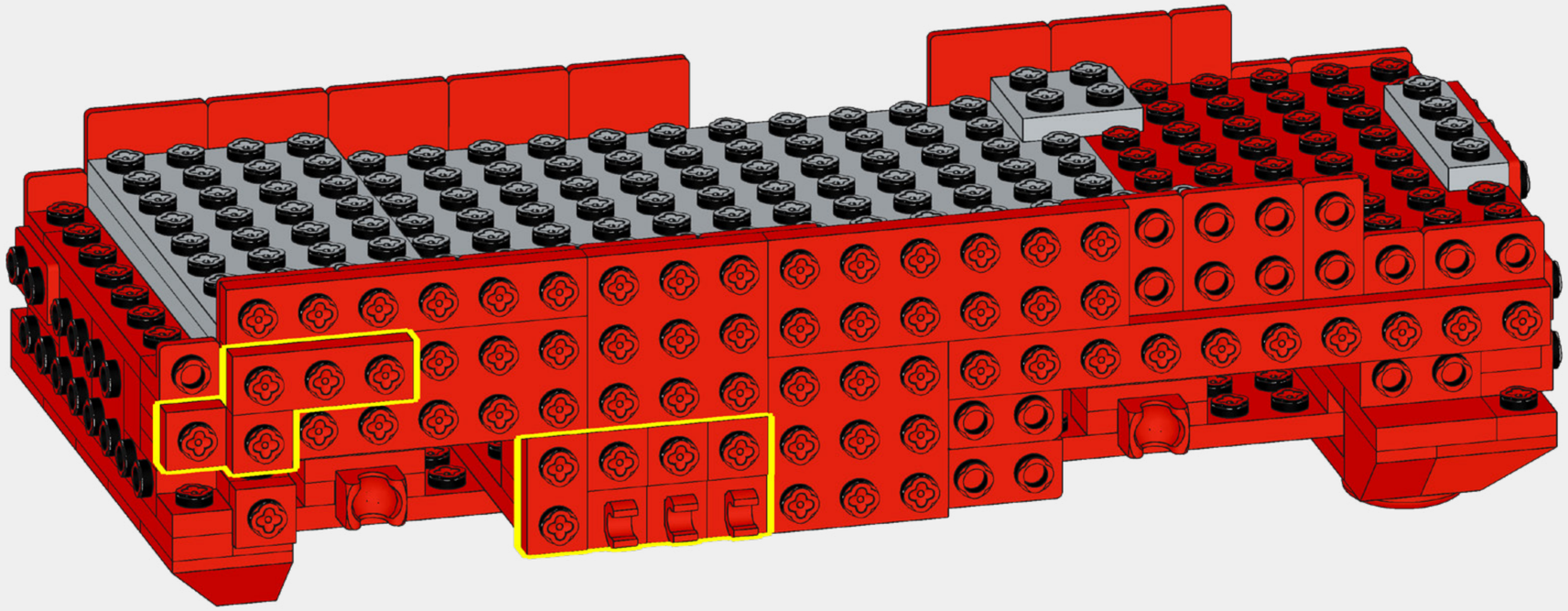

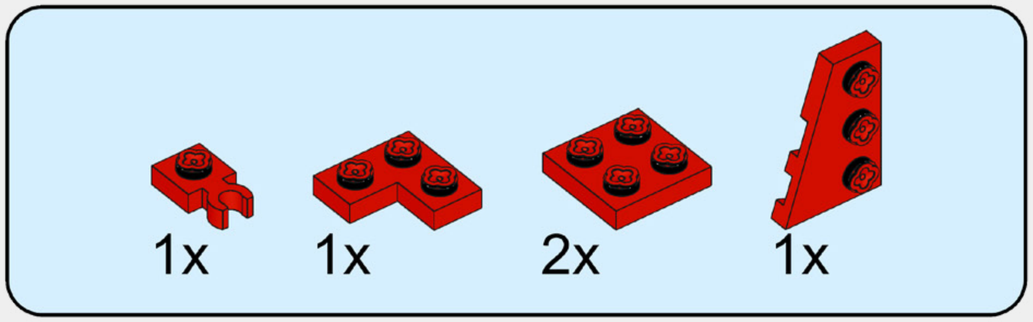

42

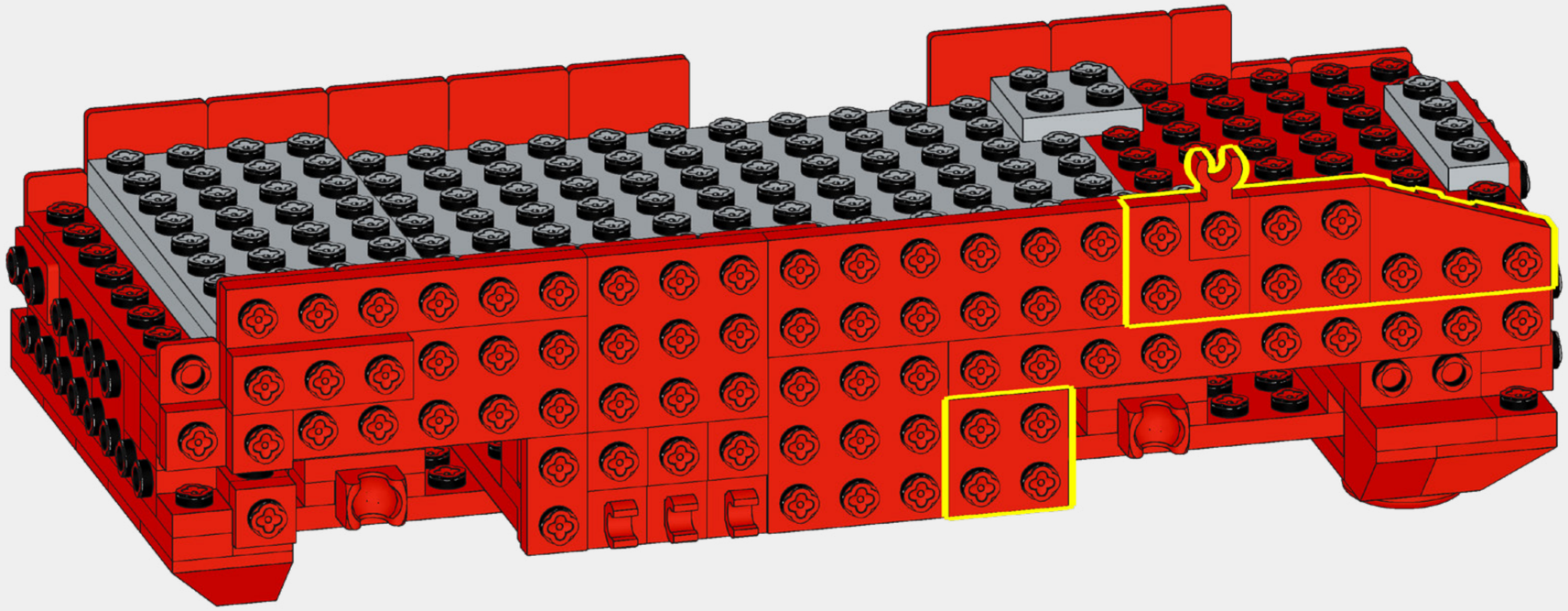

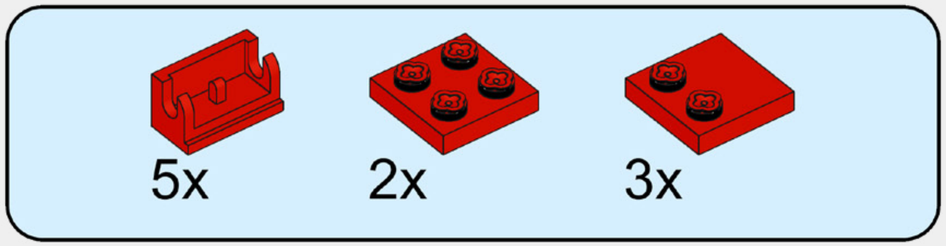

43

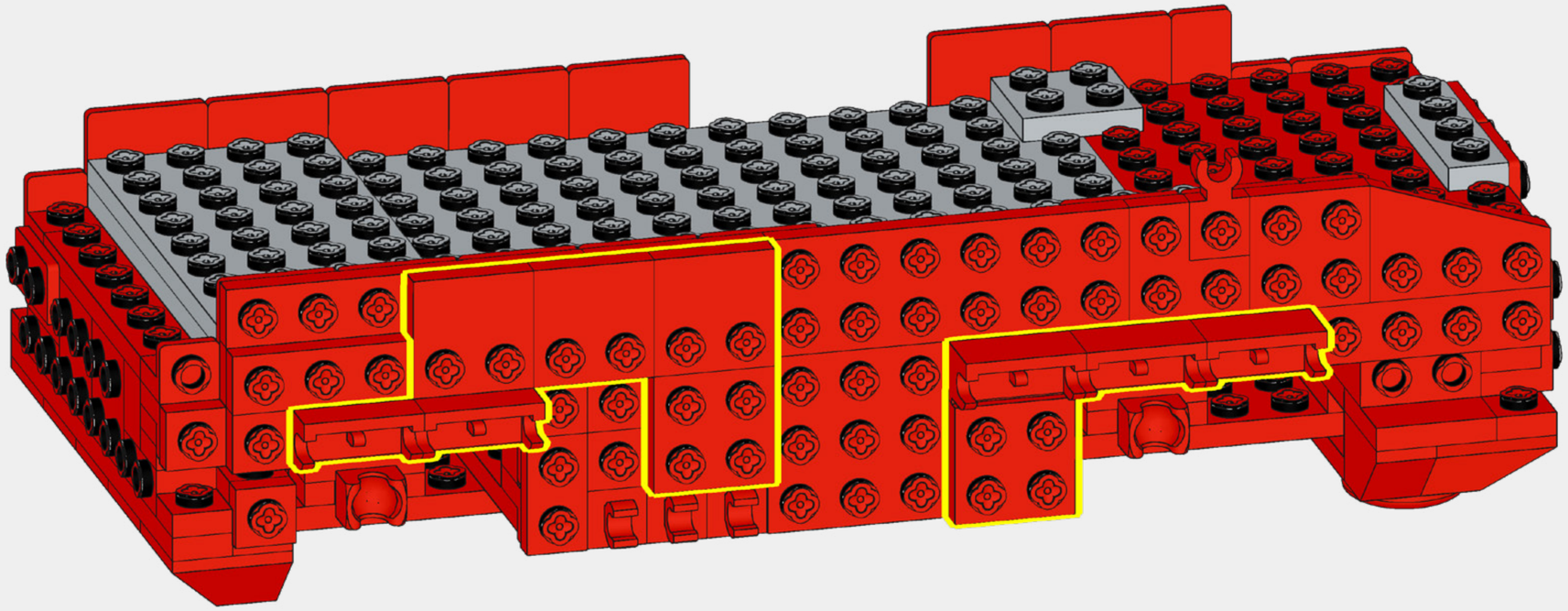

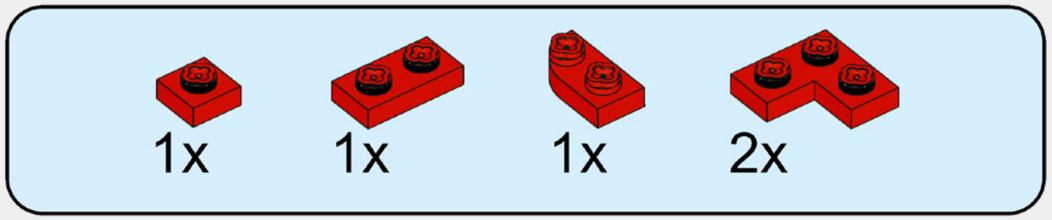

44

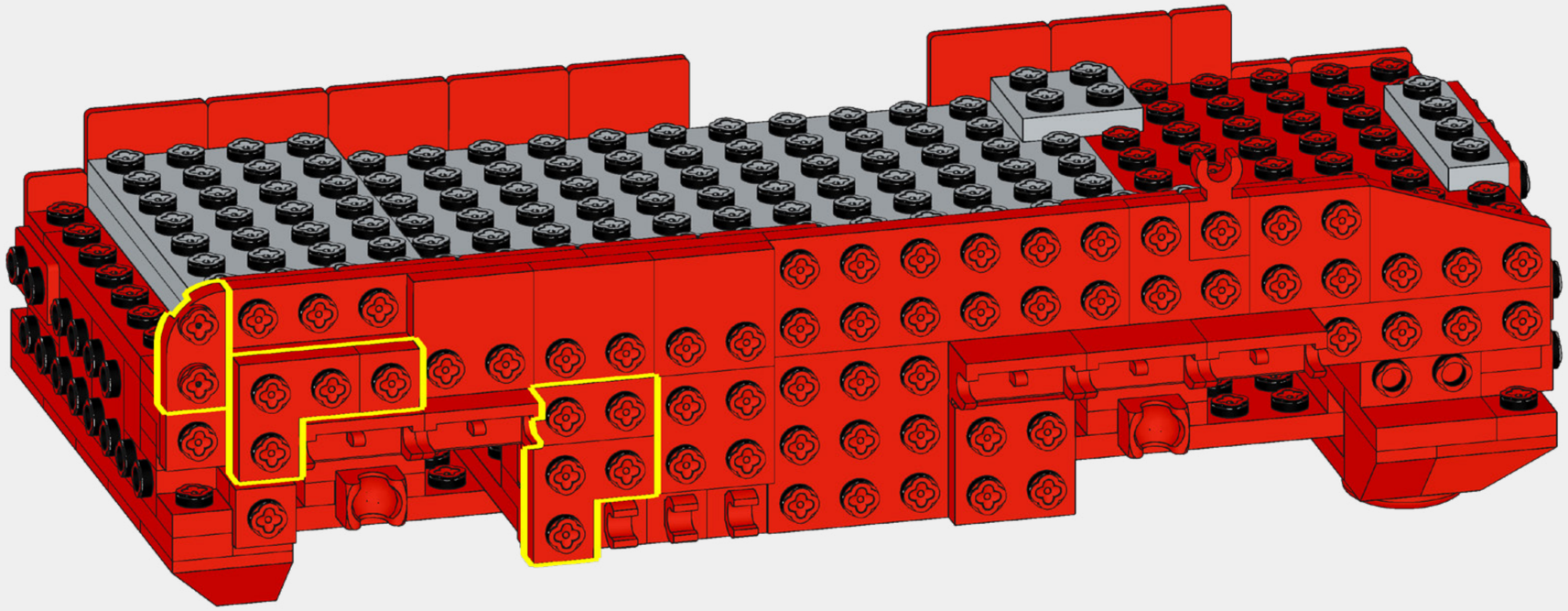

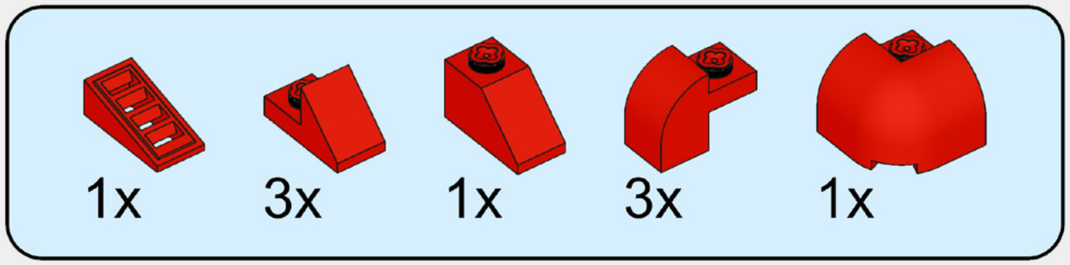

45

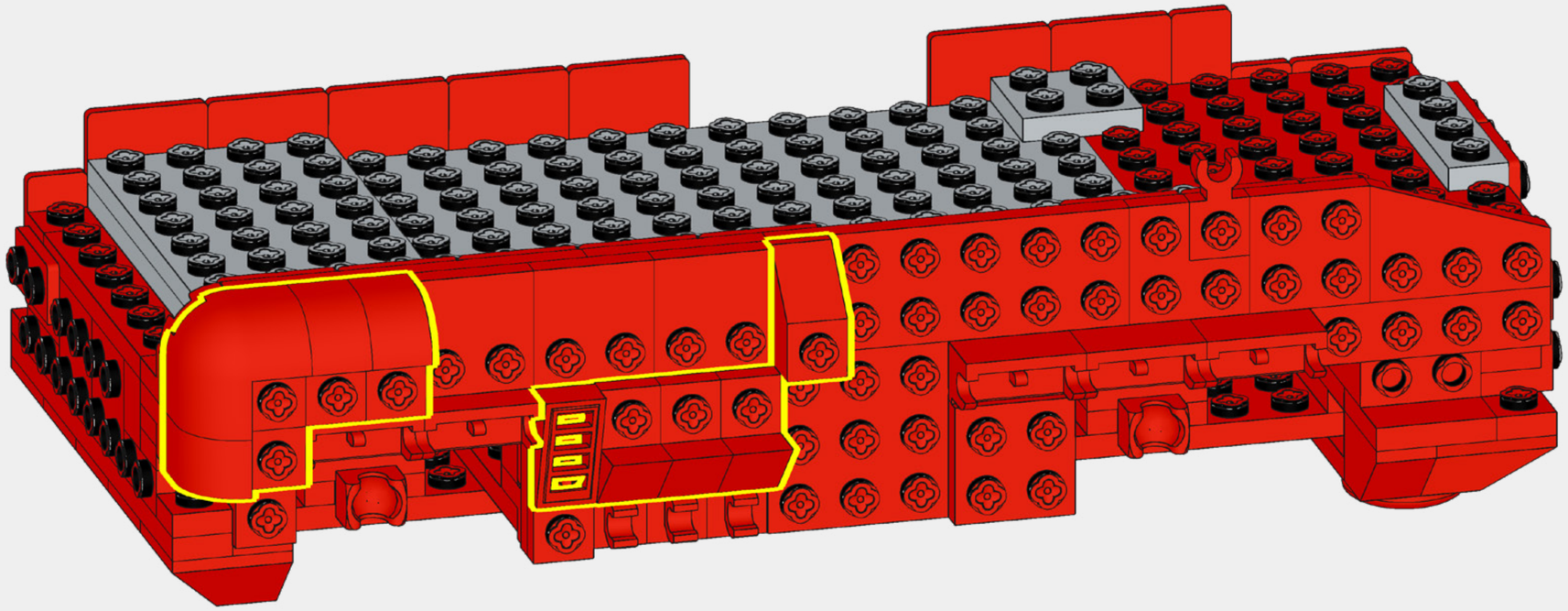

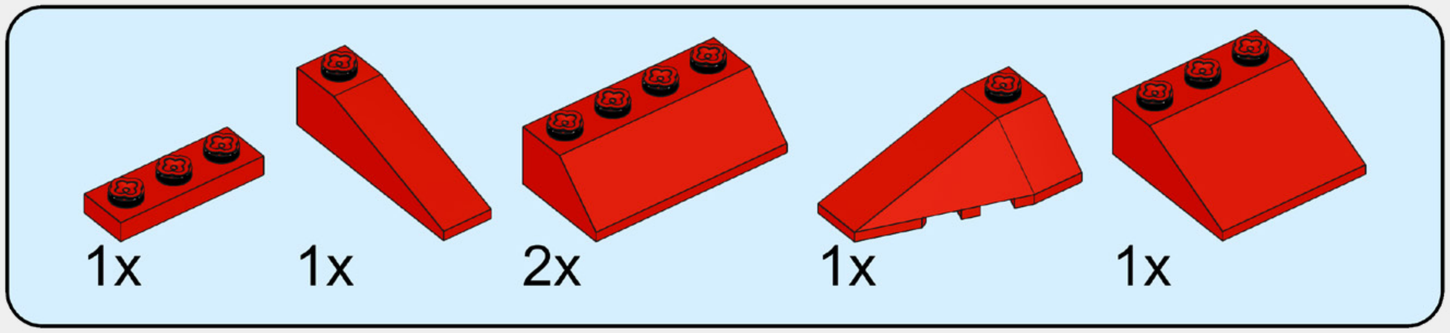

46

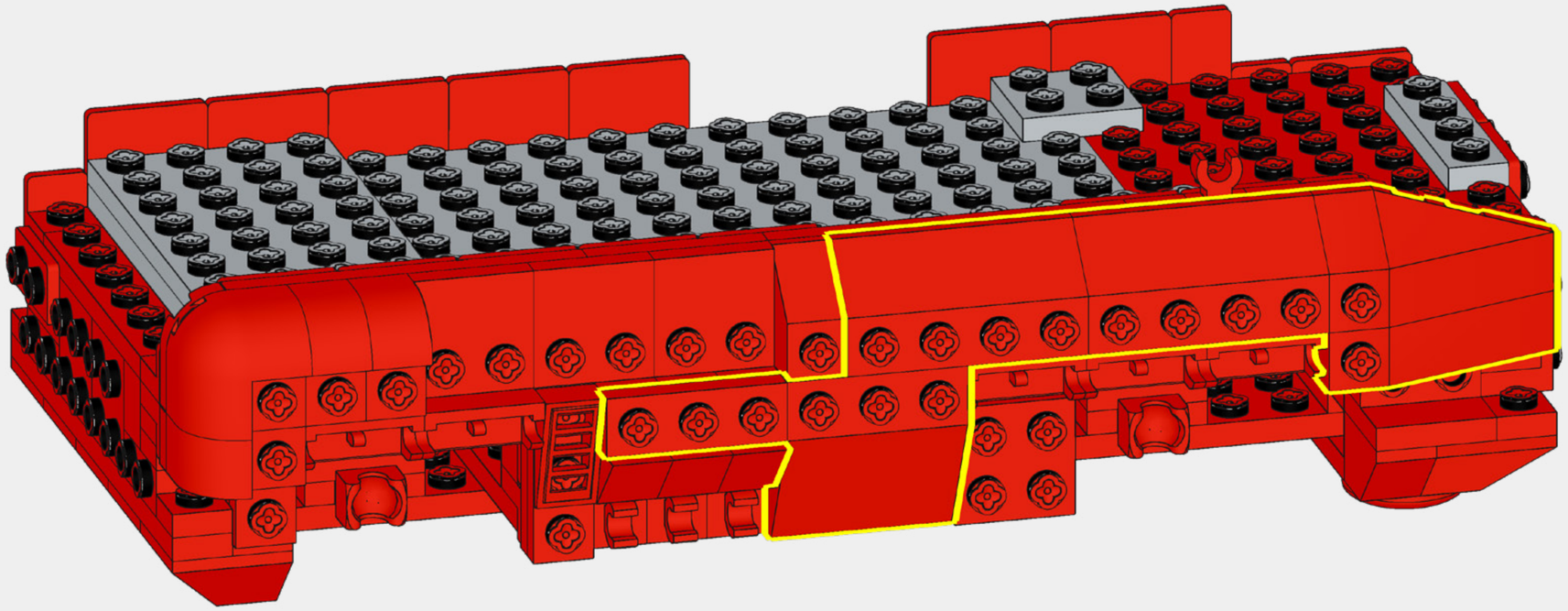

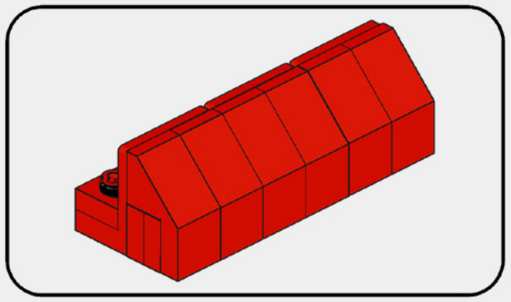

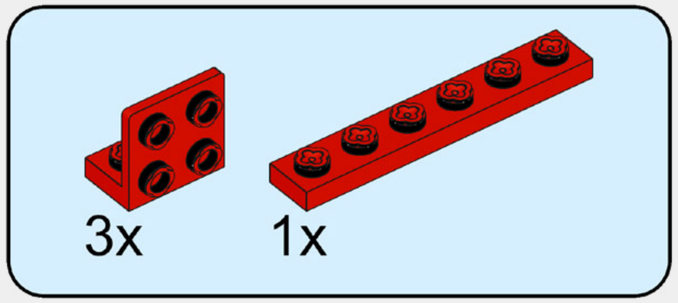

47

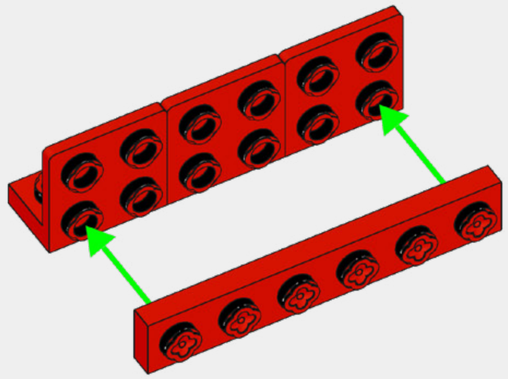

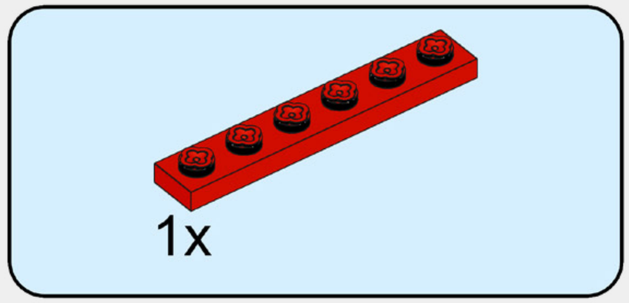

48

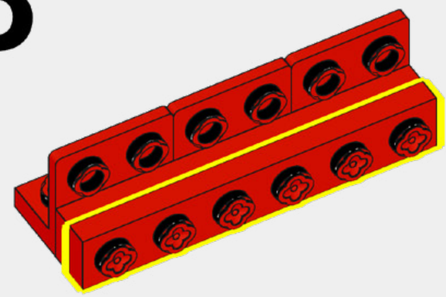

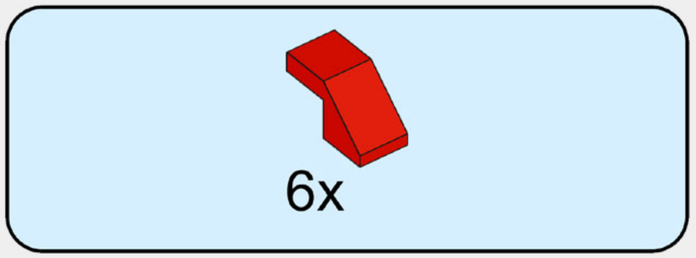

49

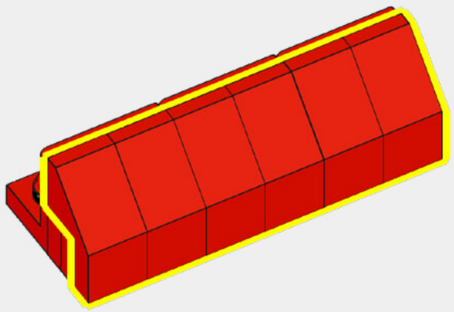

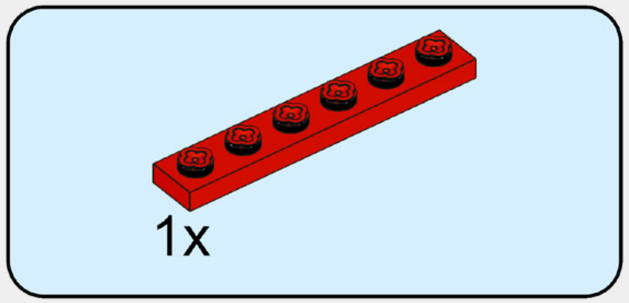

50

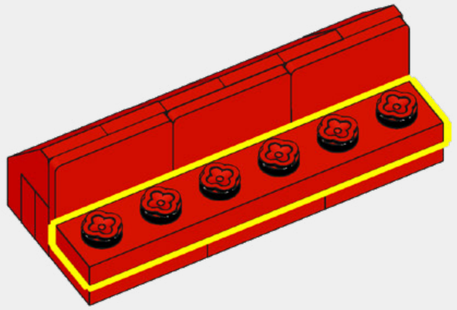

51

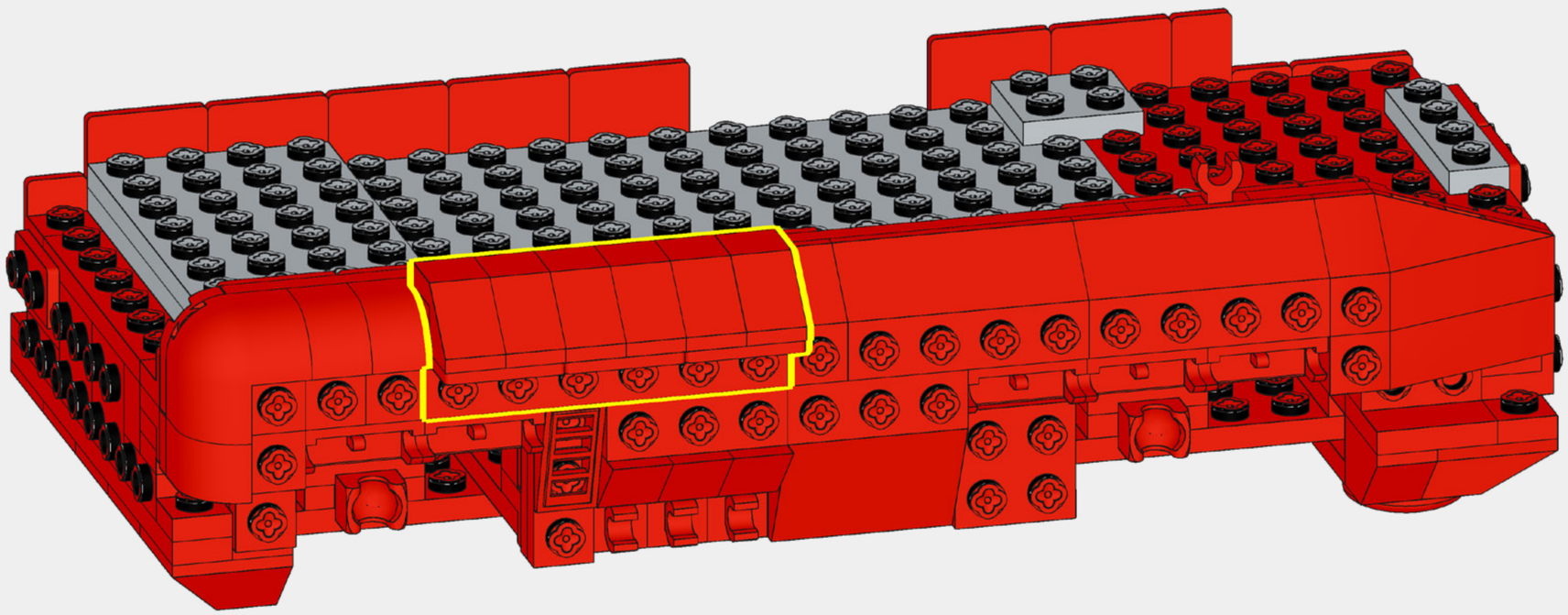

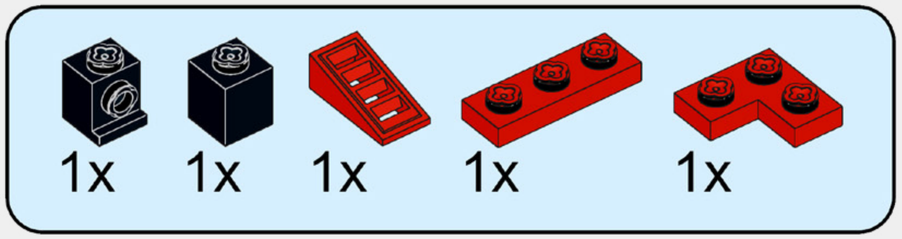

52

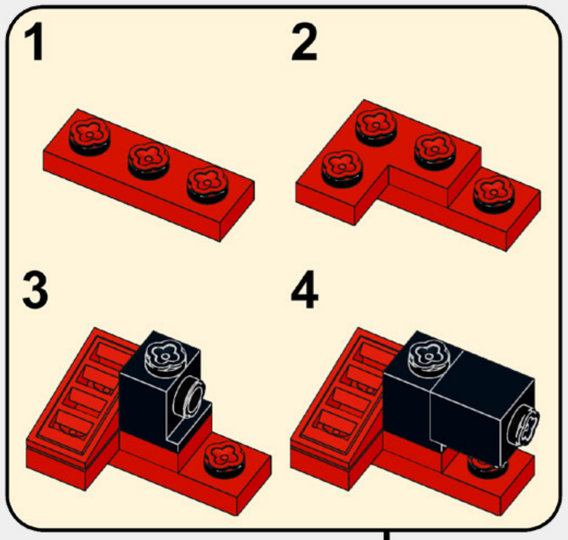

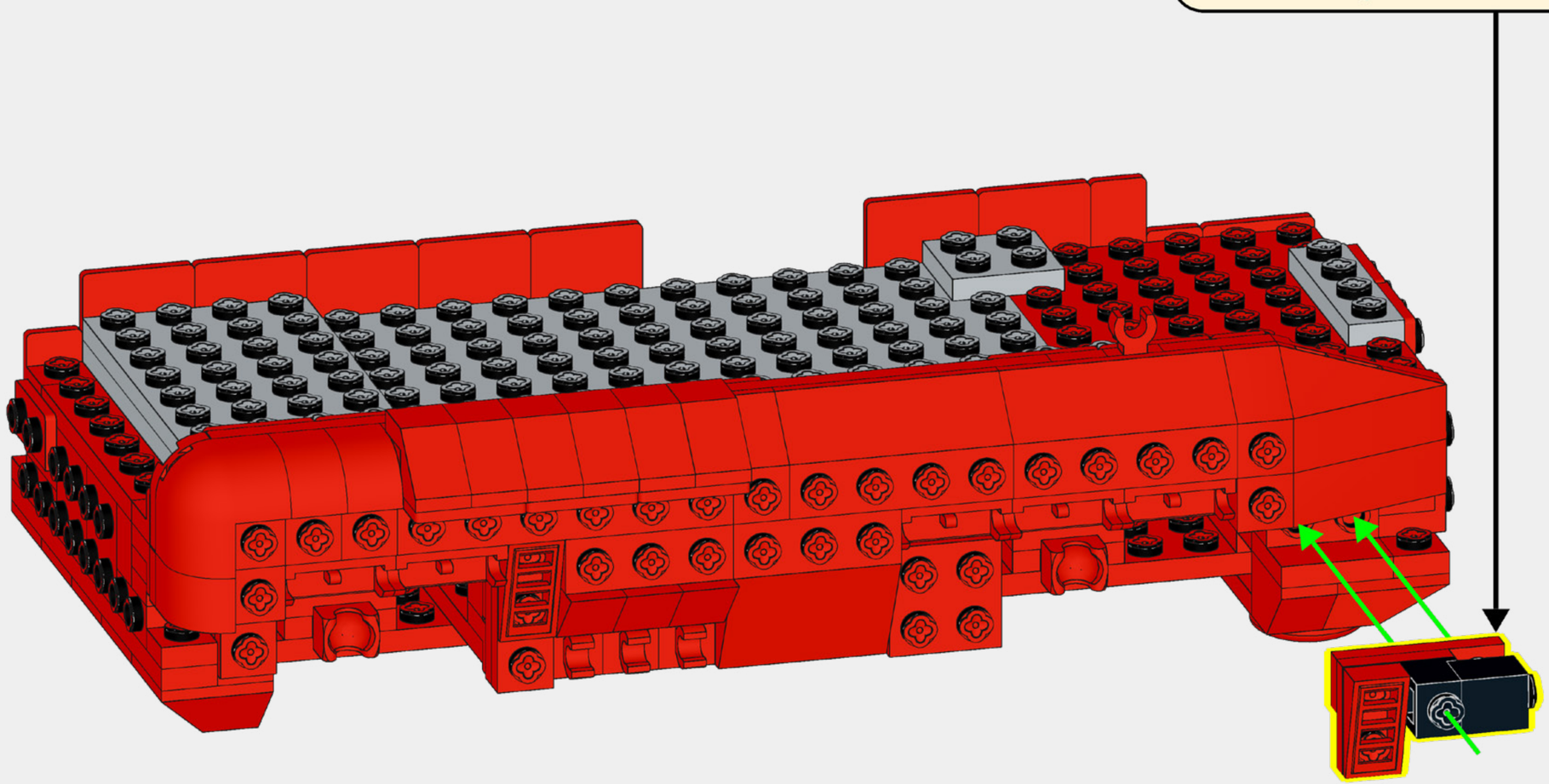

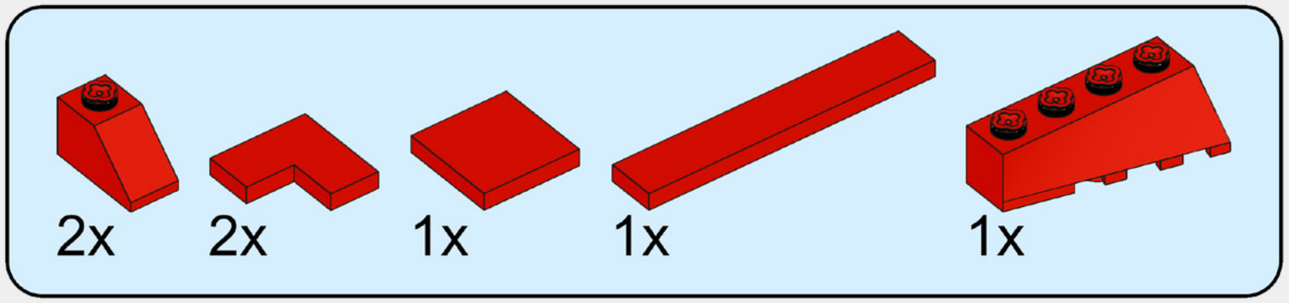

53

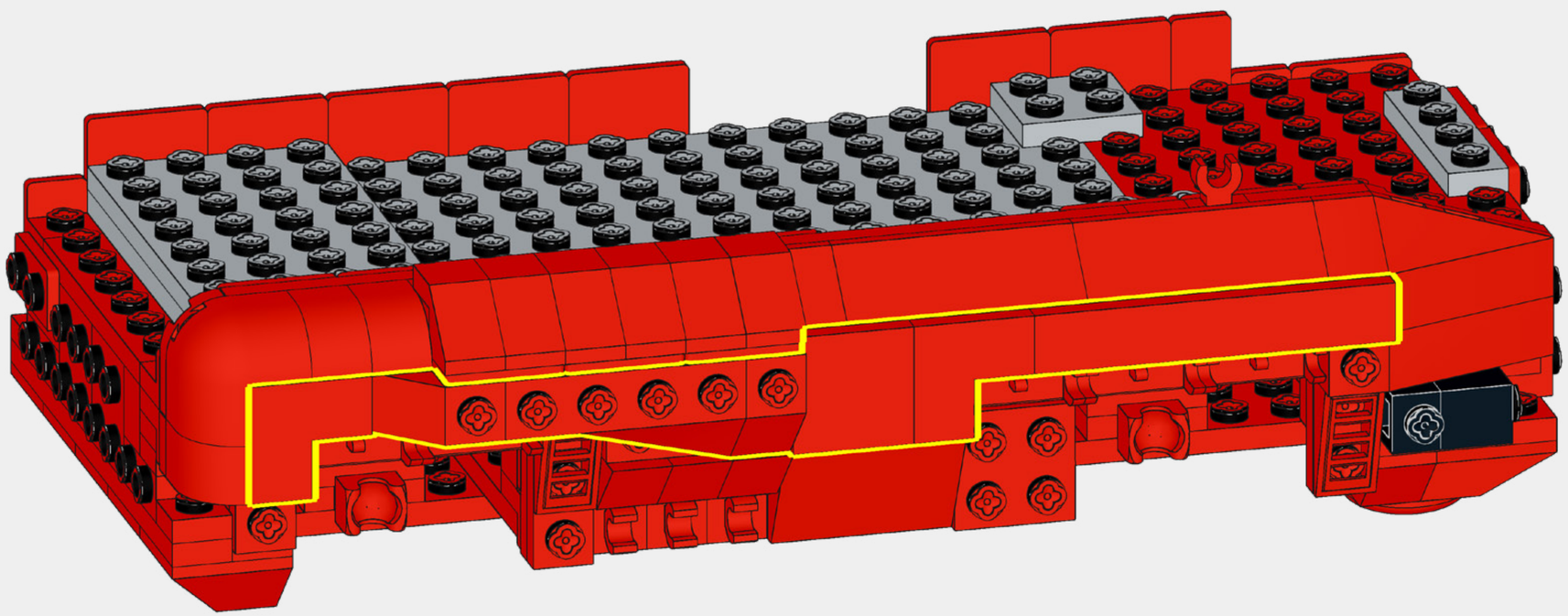

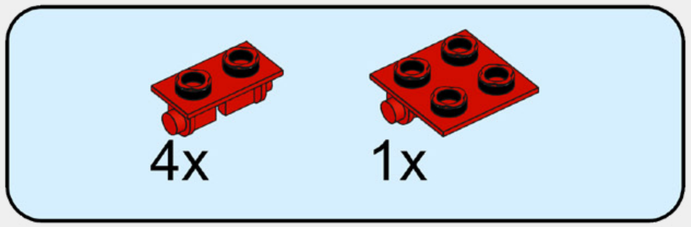

54

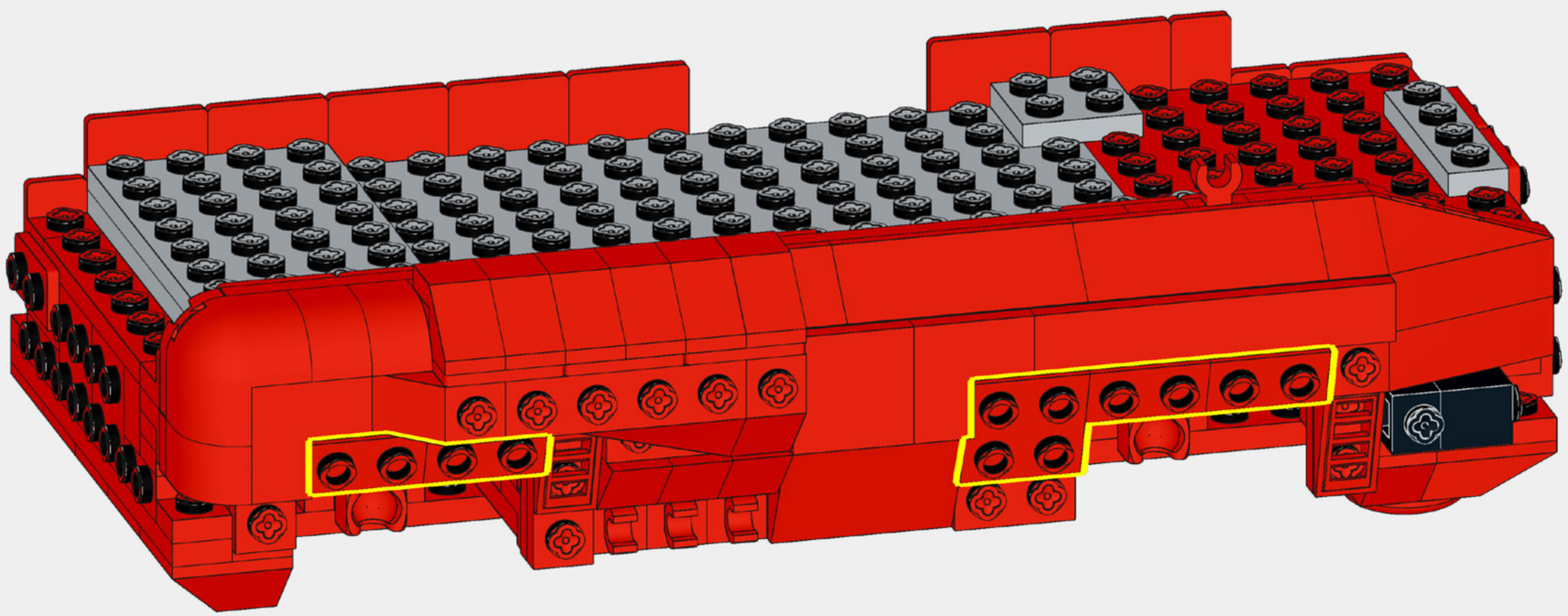

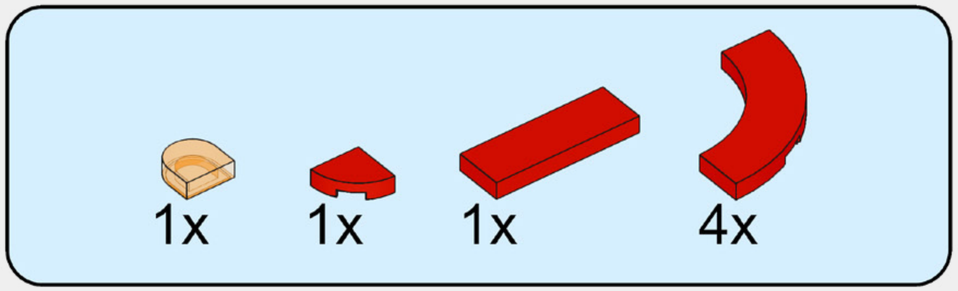

55

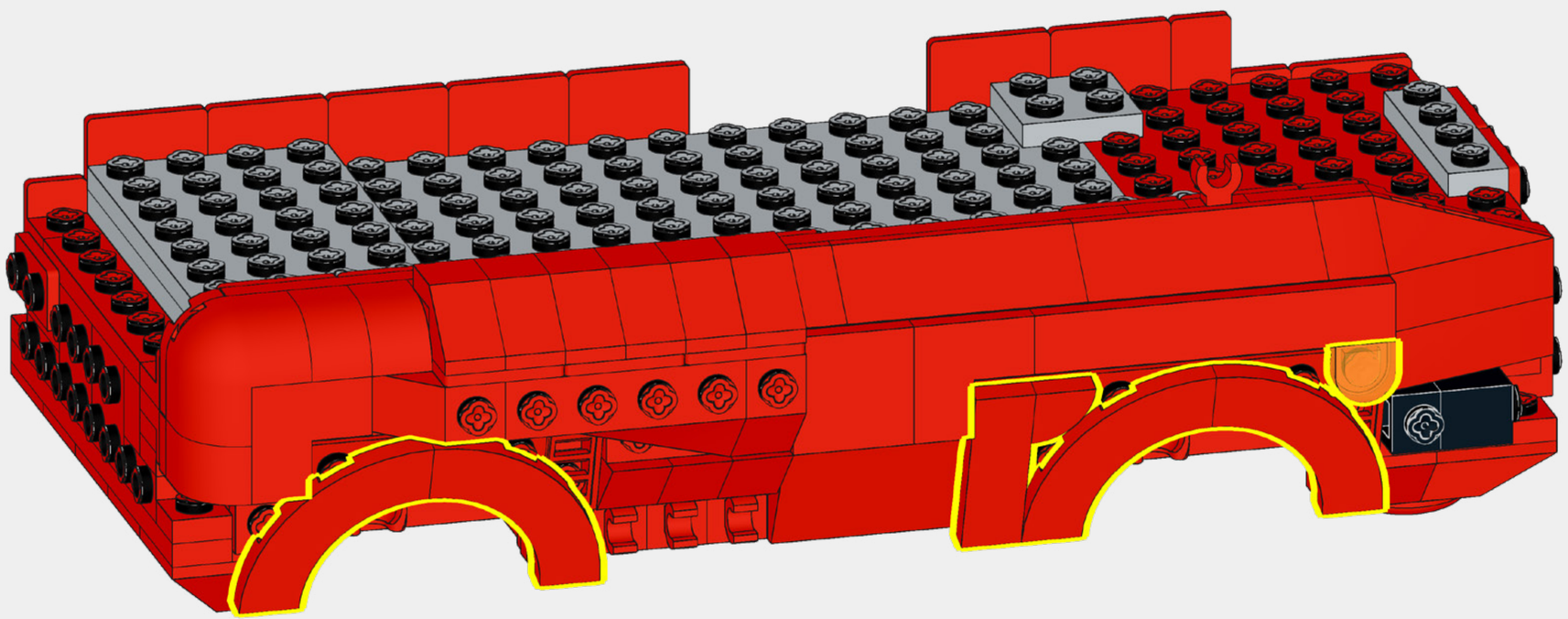

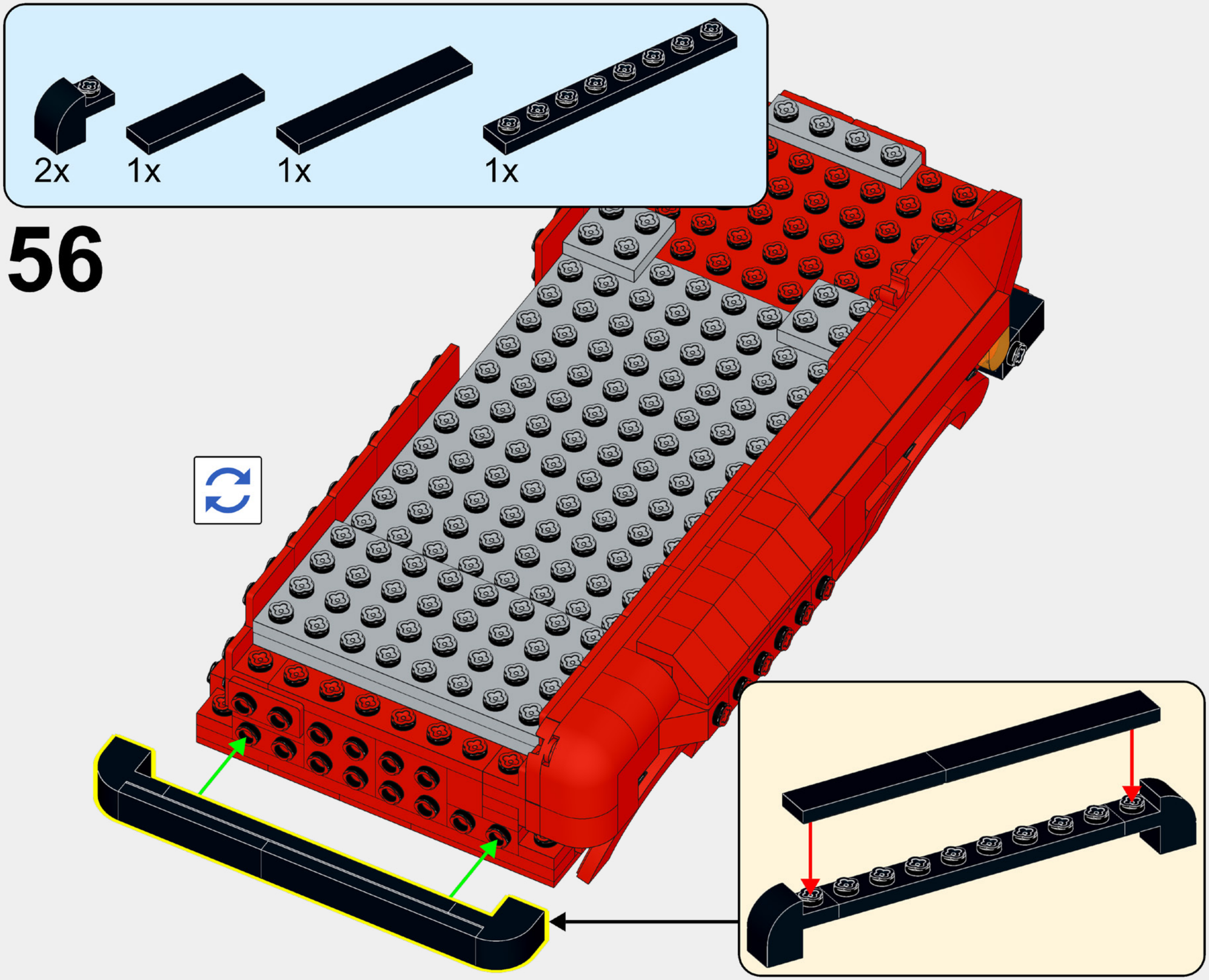
2x
1x
1x
1x
56

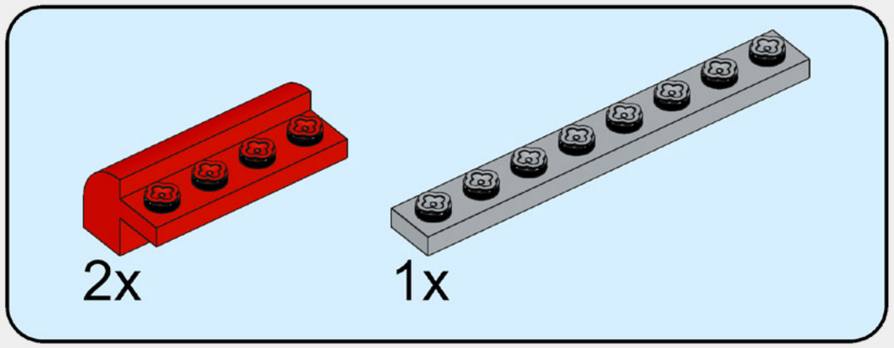

57

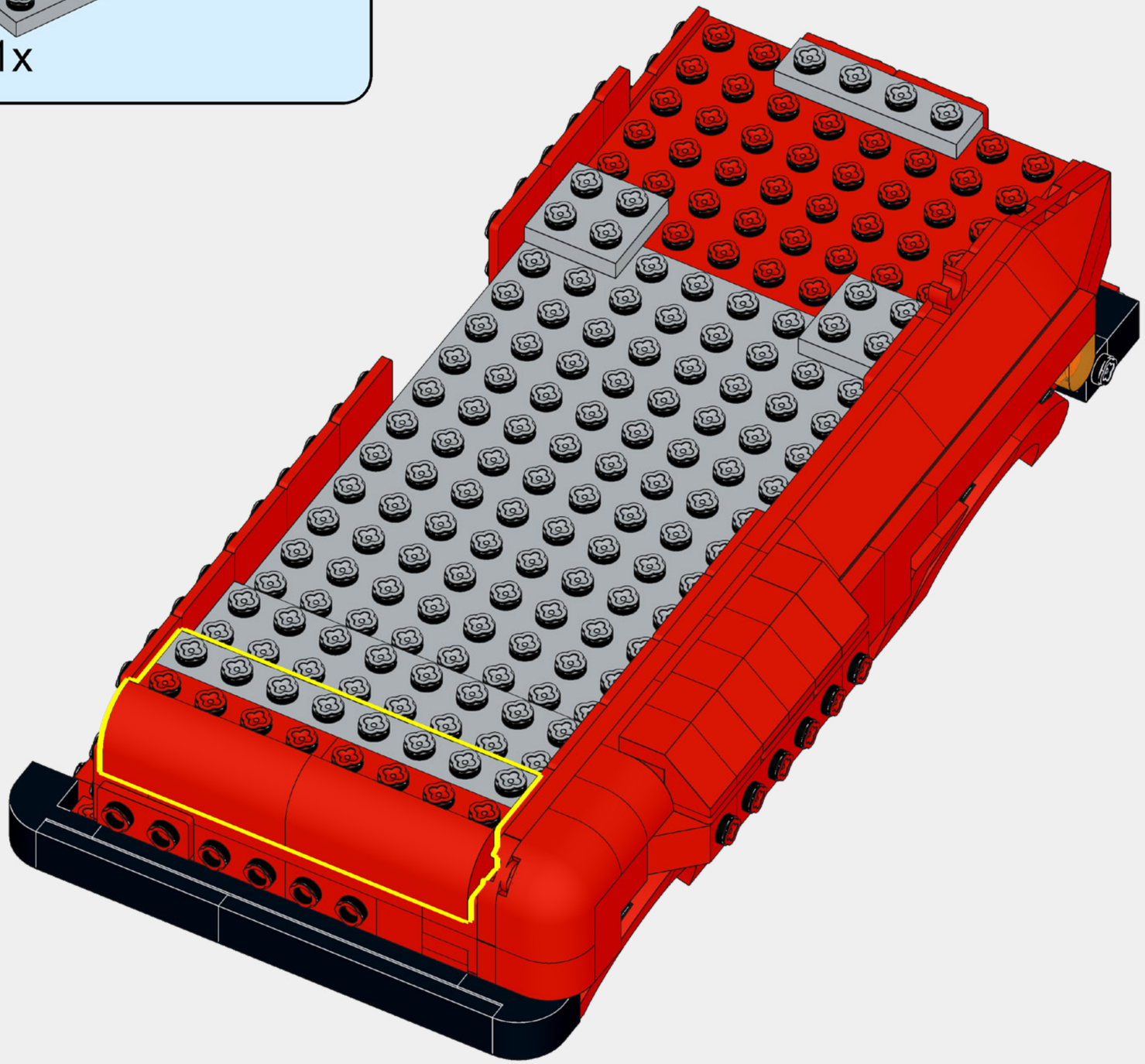

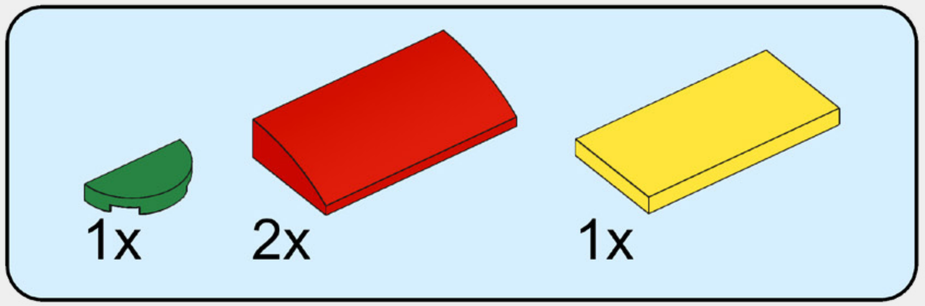

58

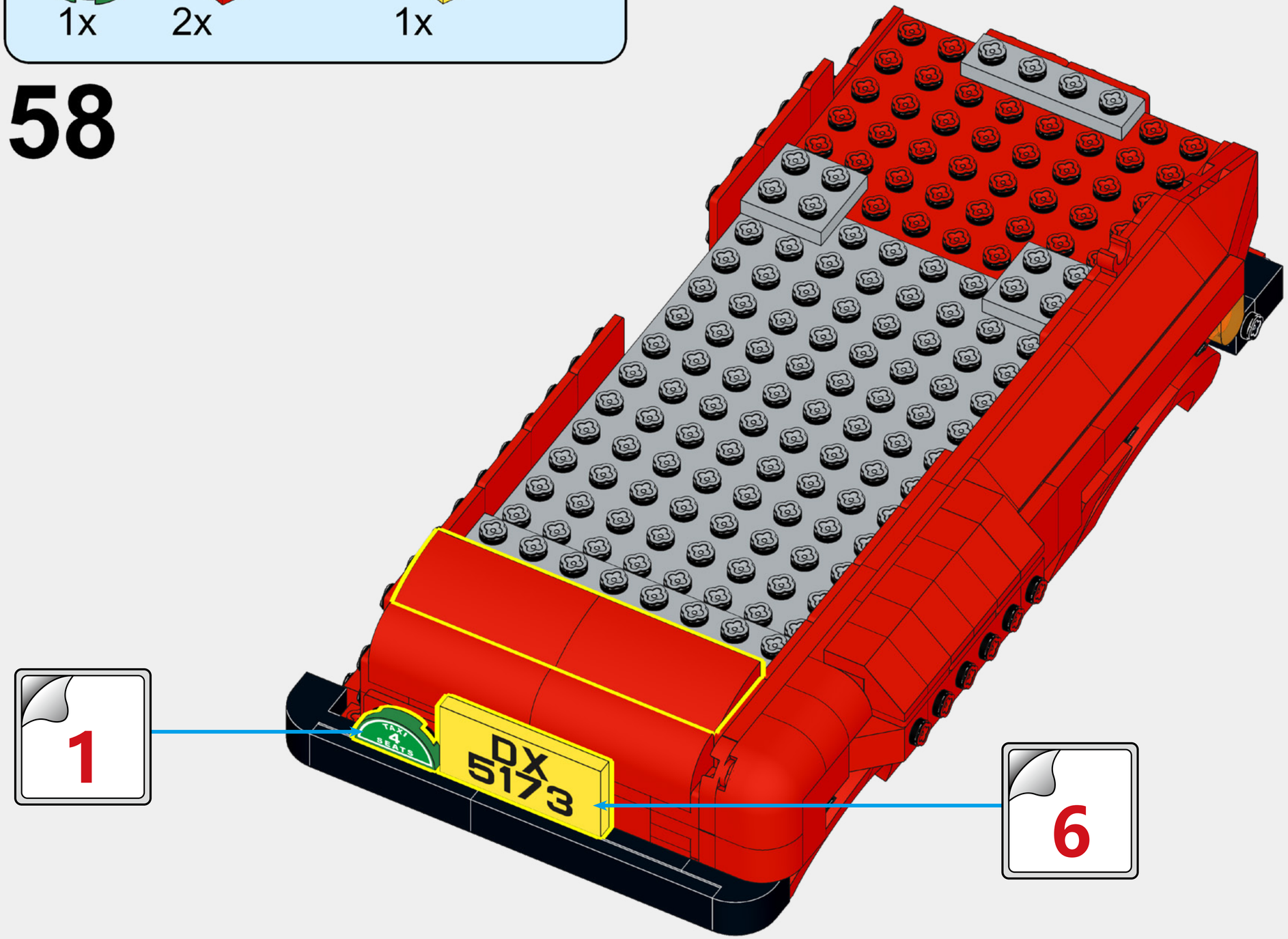

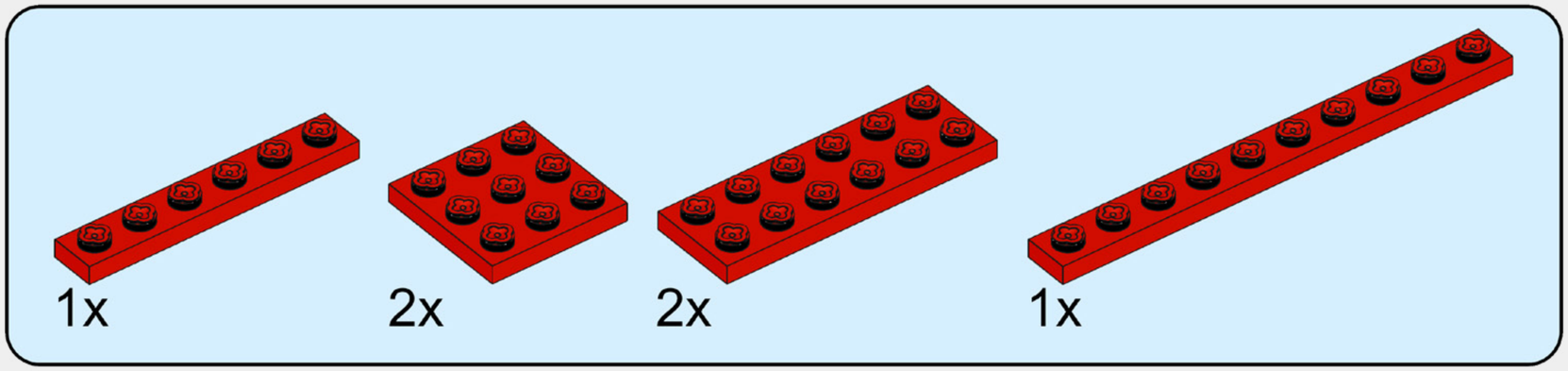

59

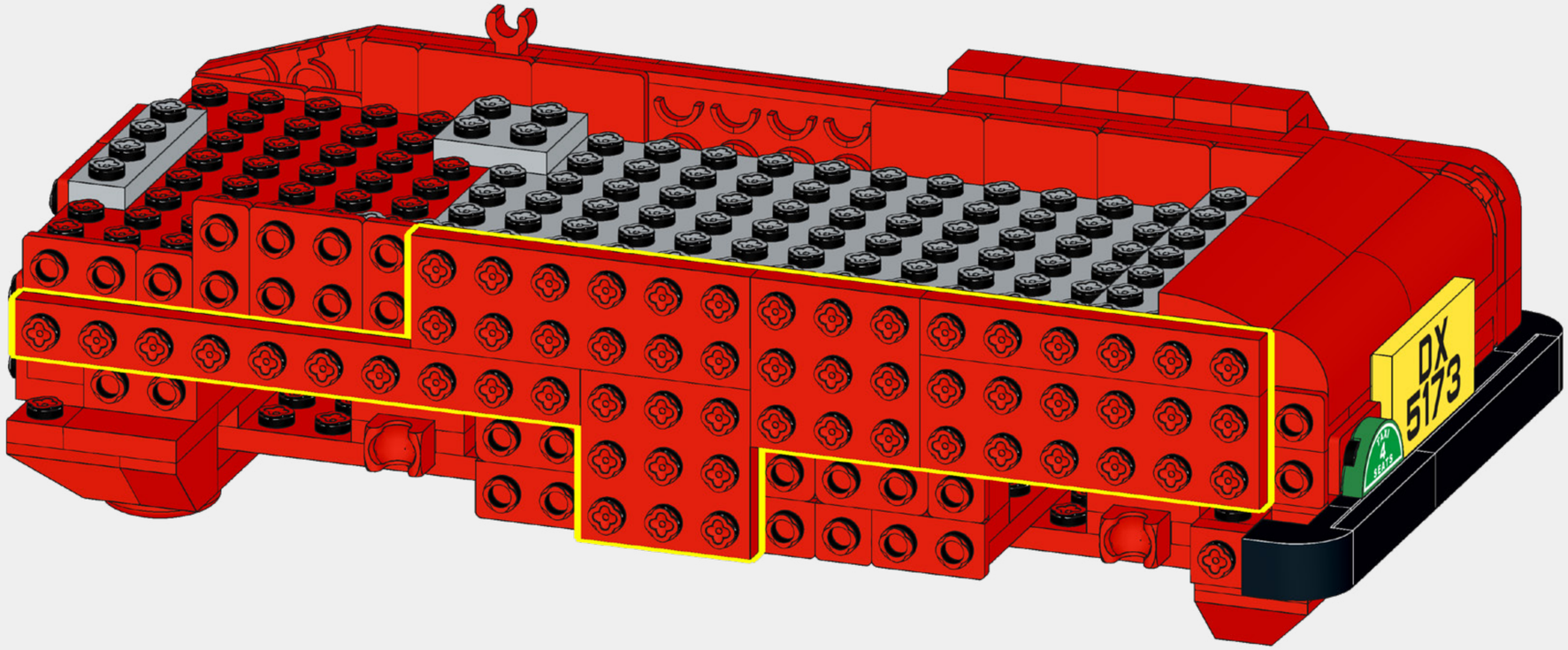

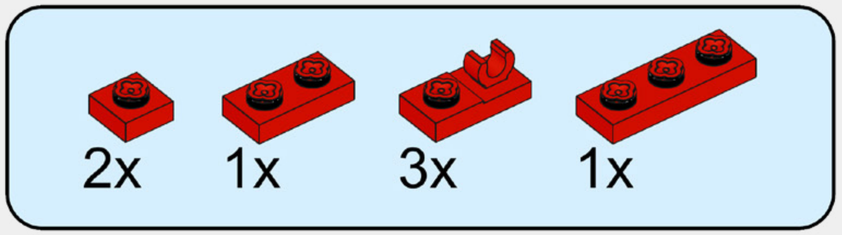

60

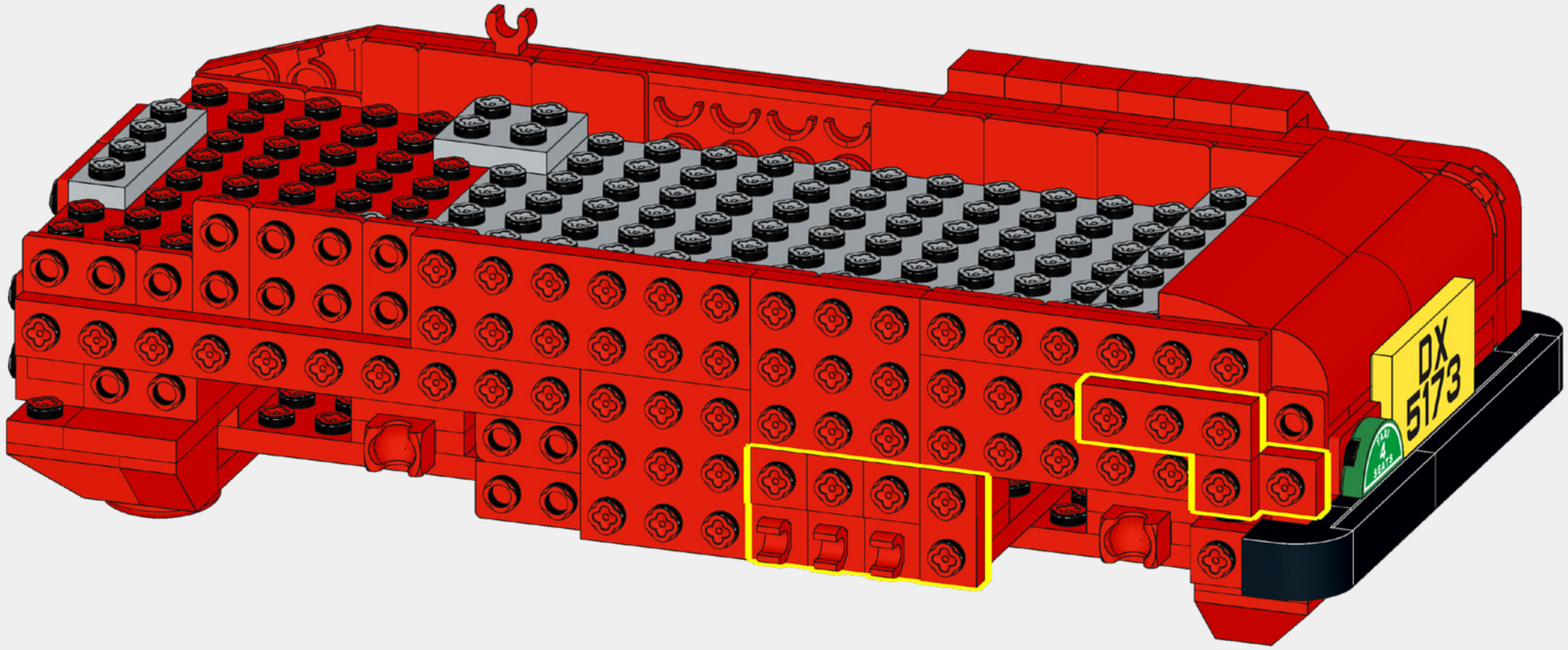

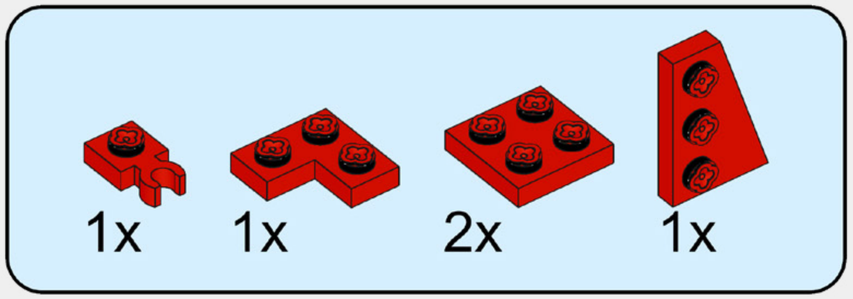

61

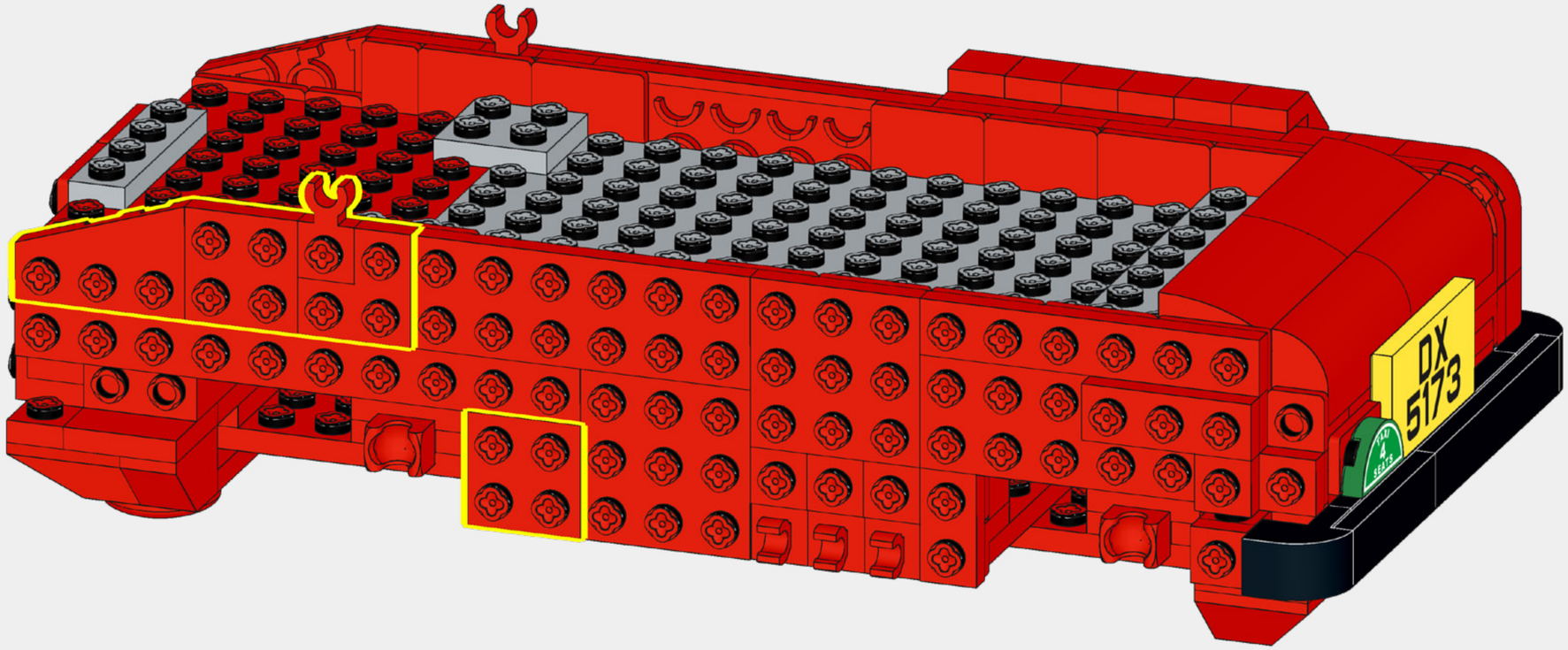

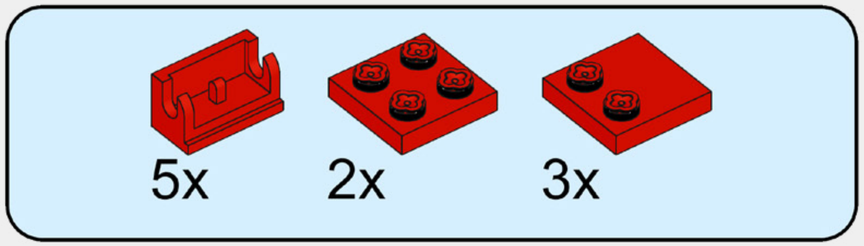

62

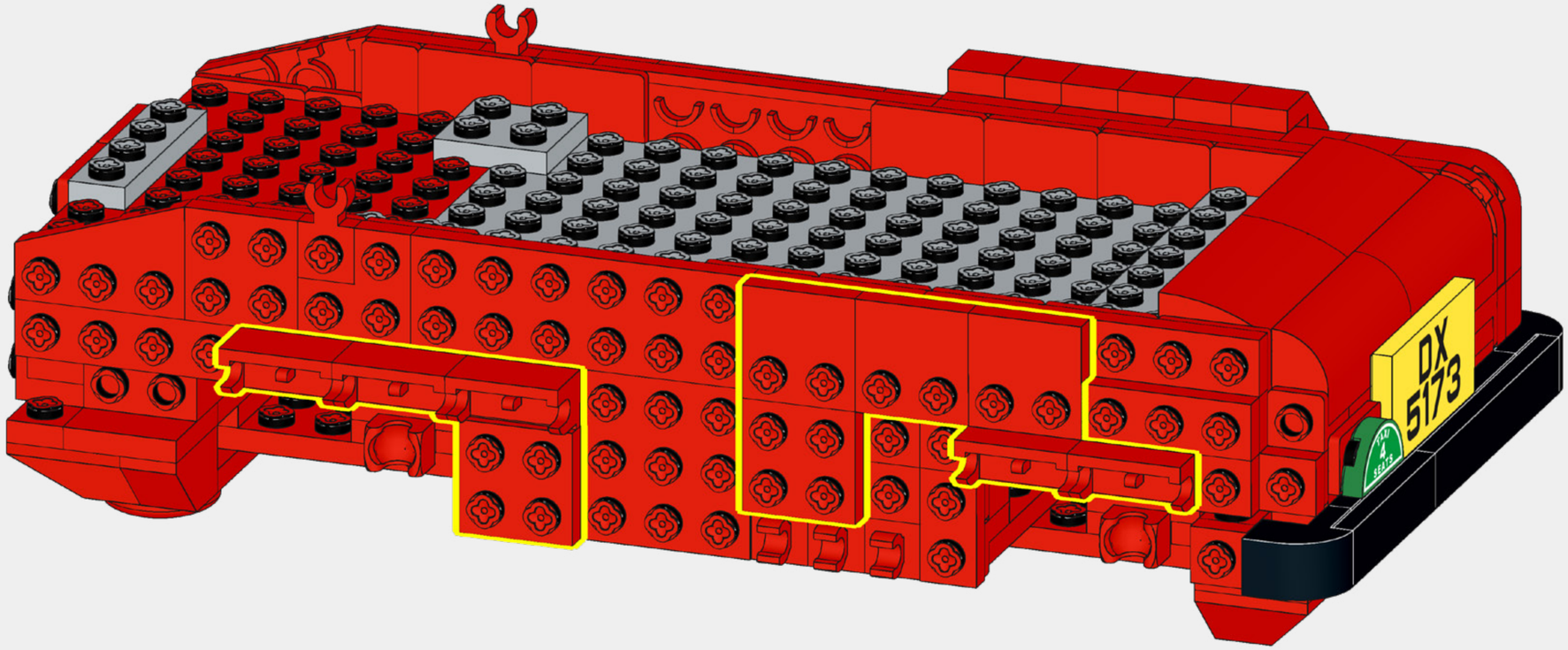

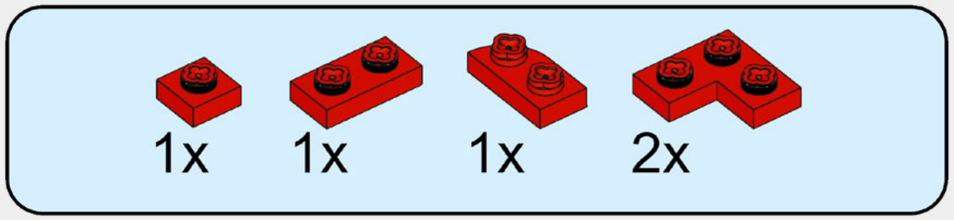

63

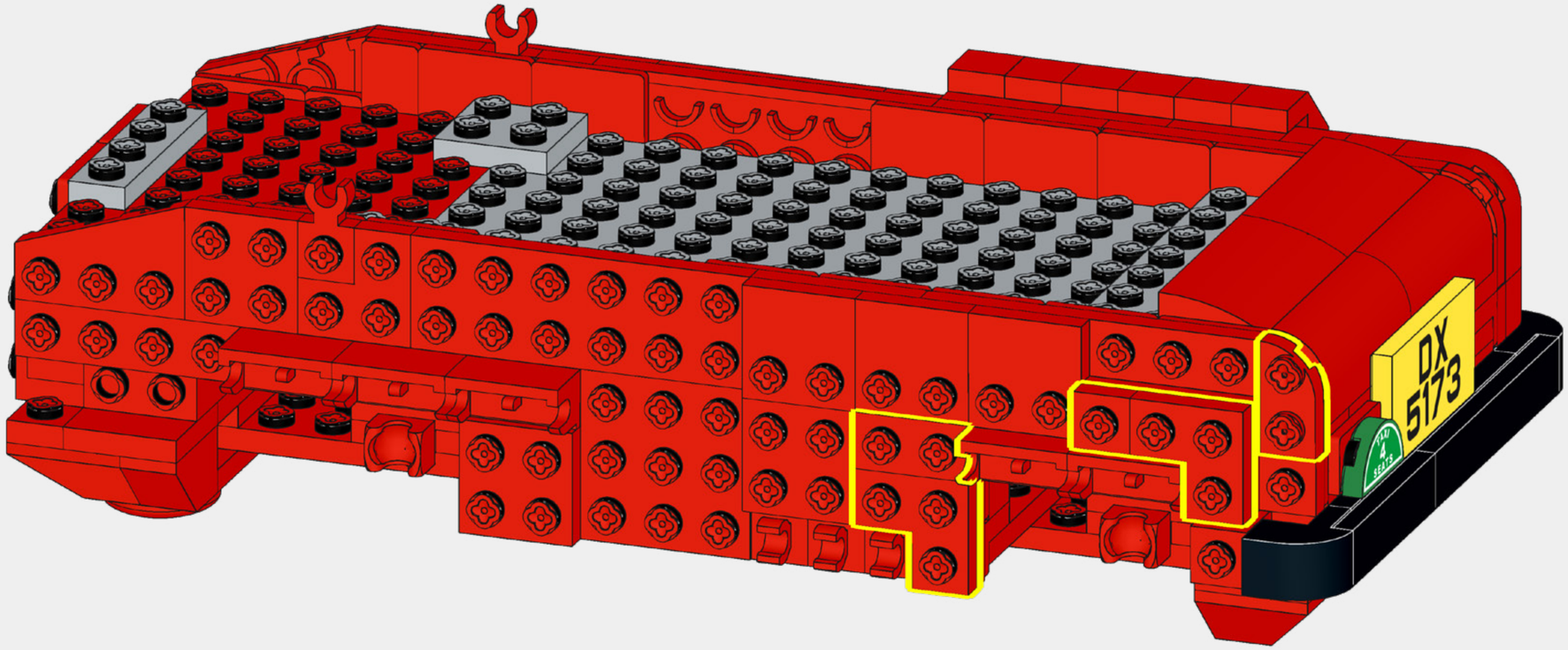

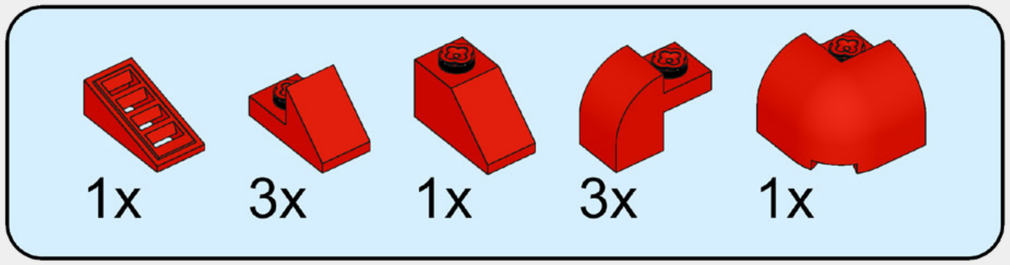

64

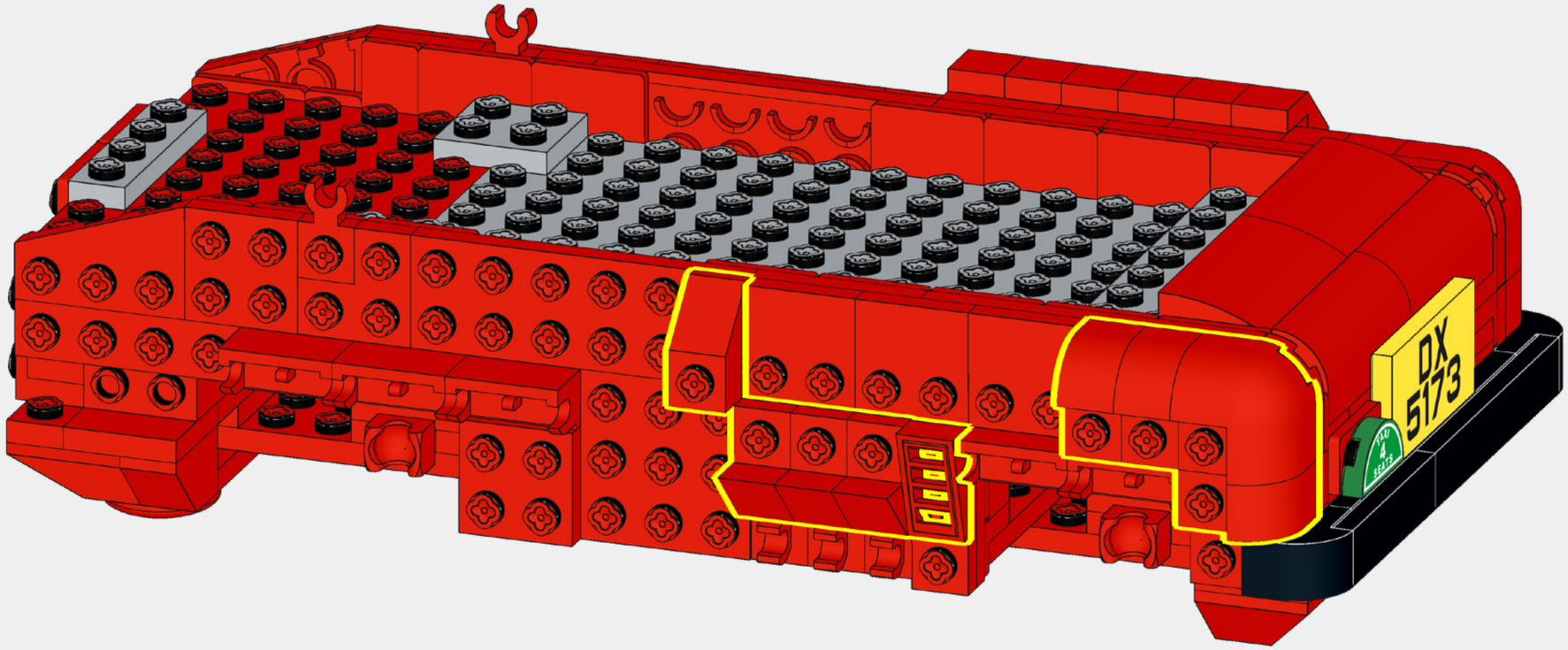

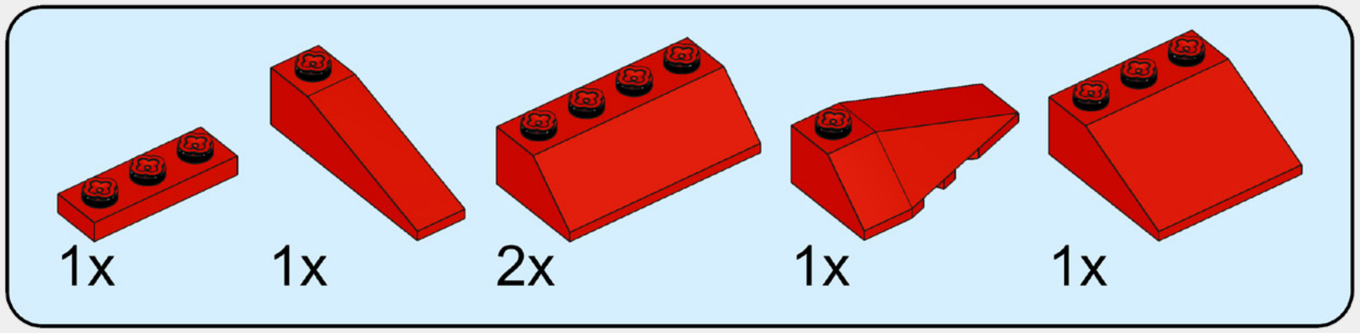

65

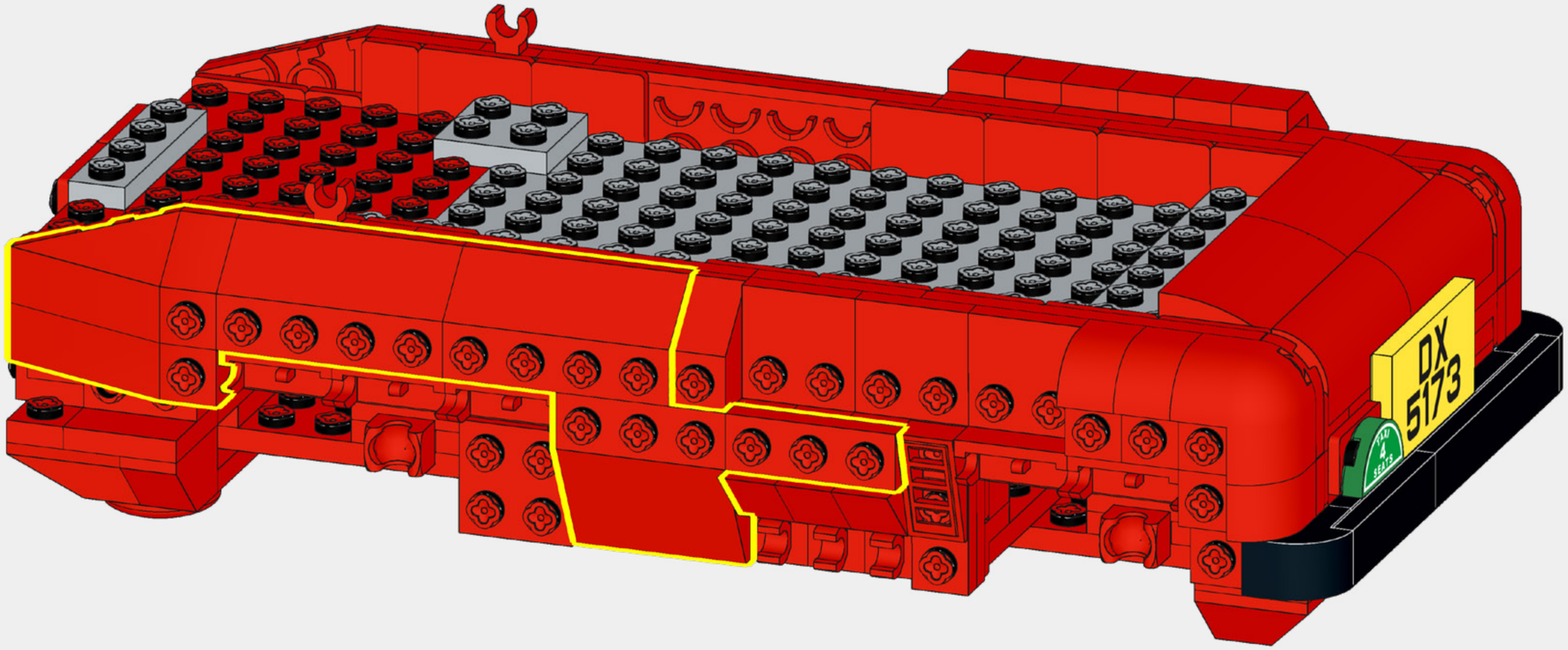

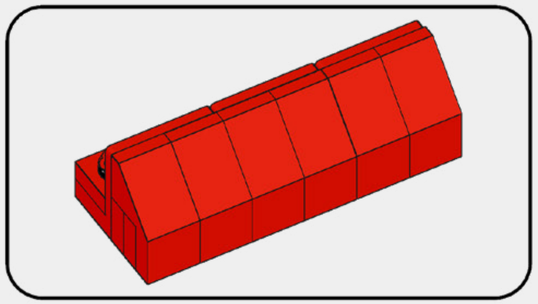

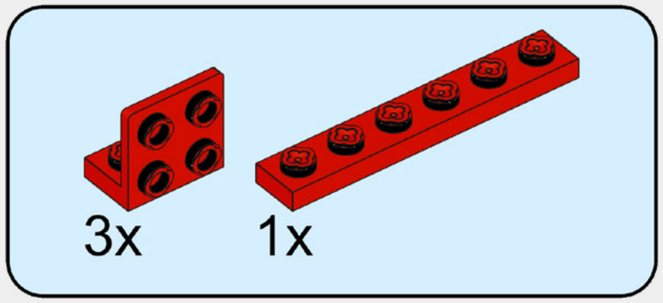

66

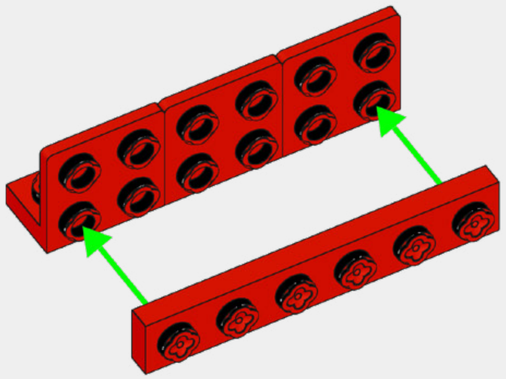

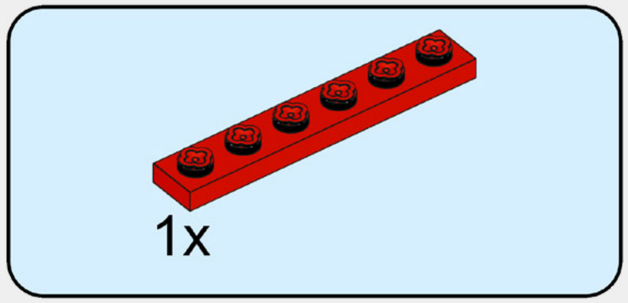

67

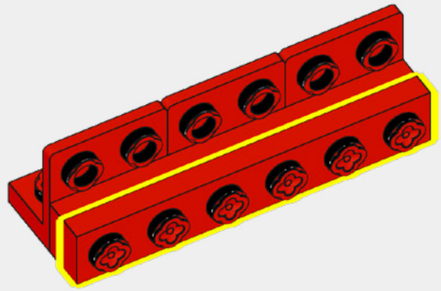

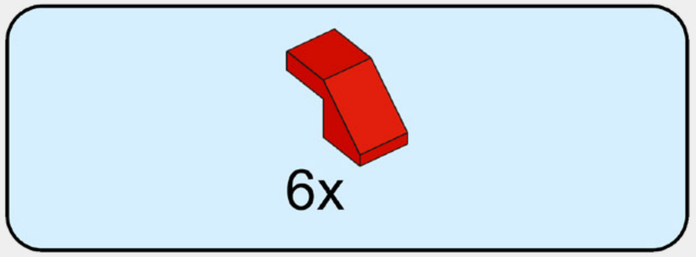

68

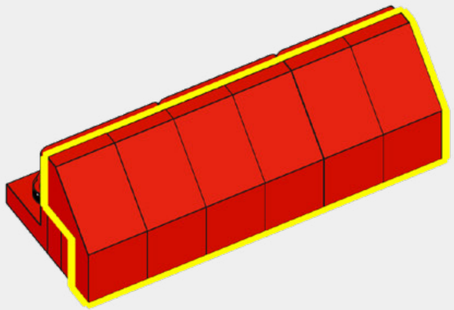

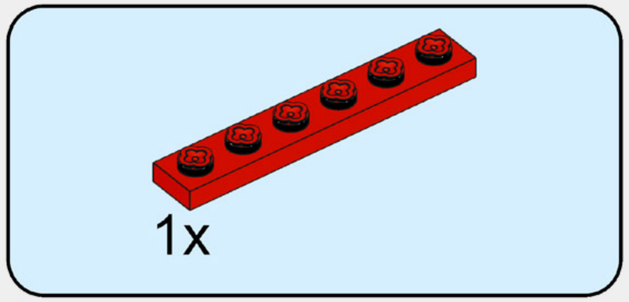

69

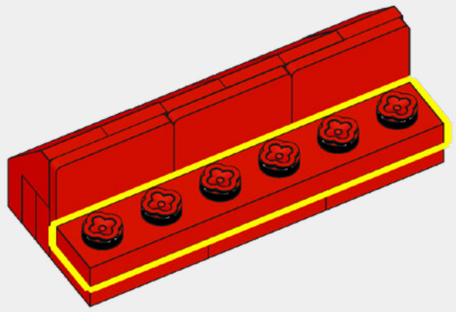

70

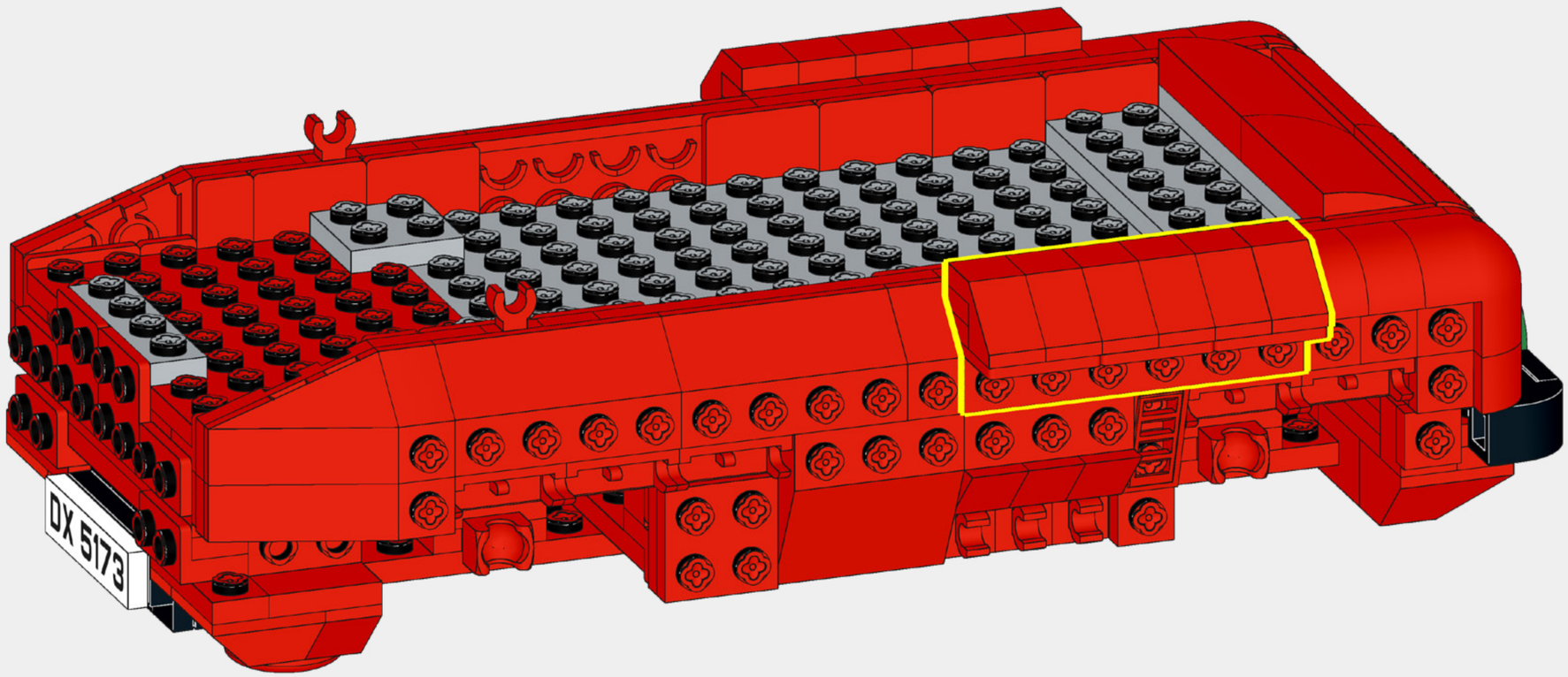

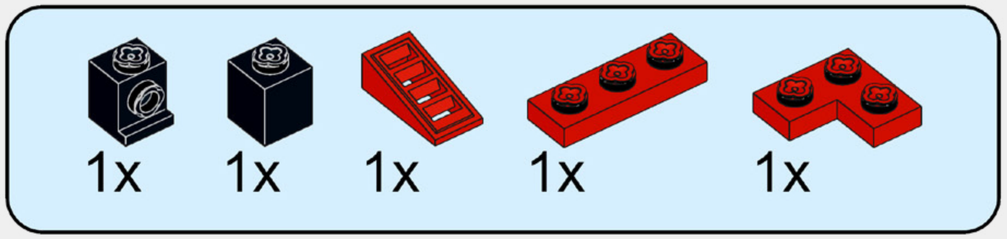

71

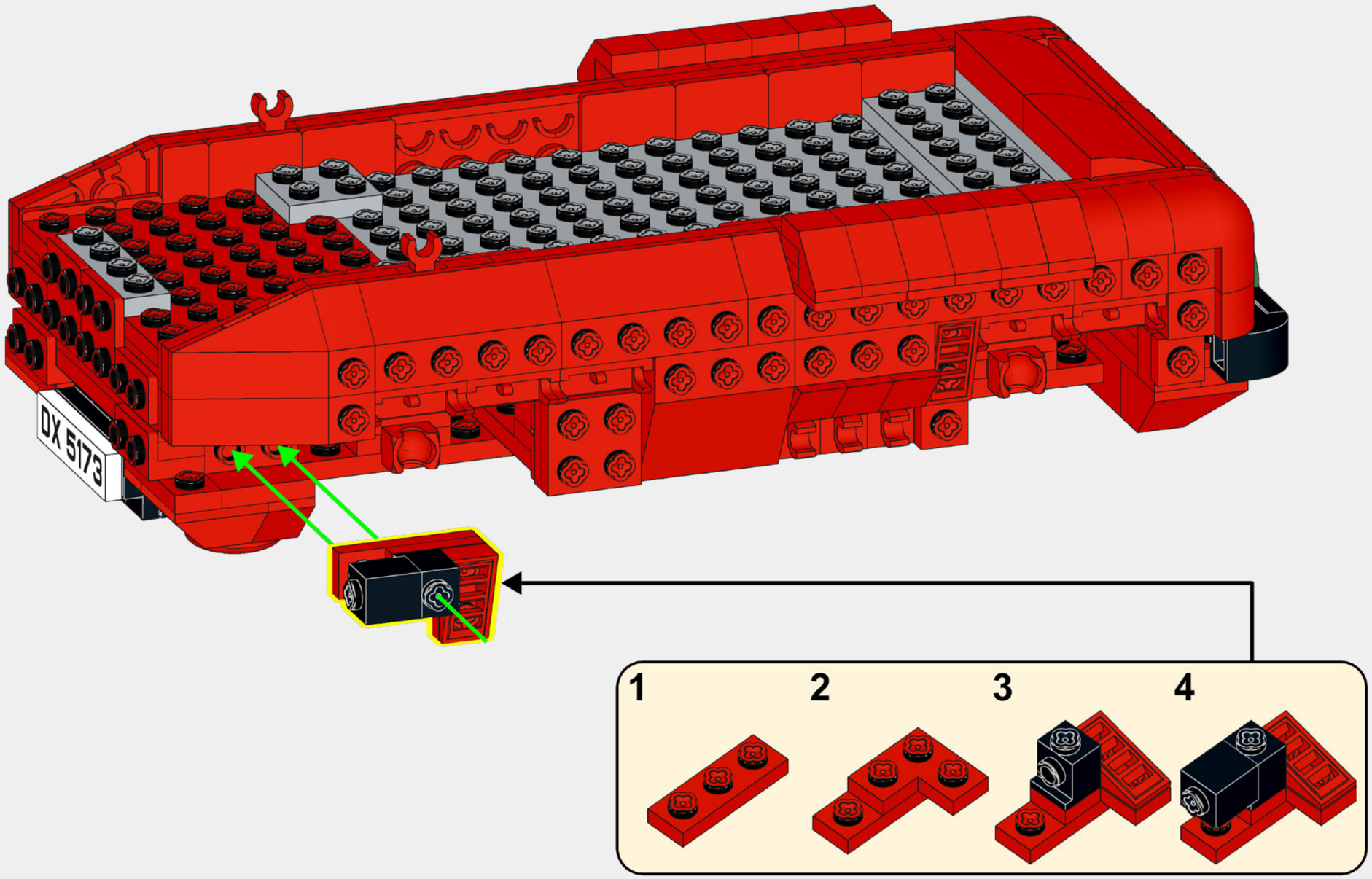

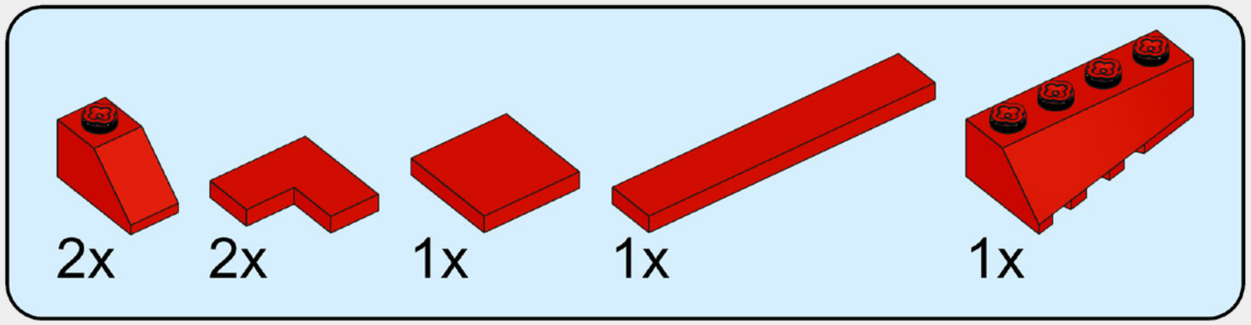

72

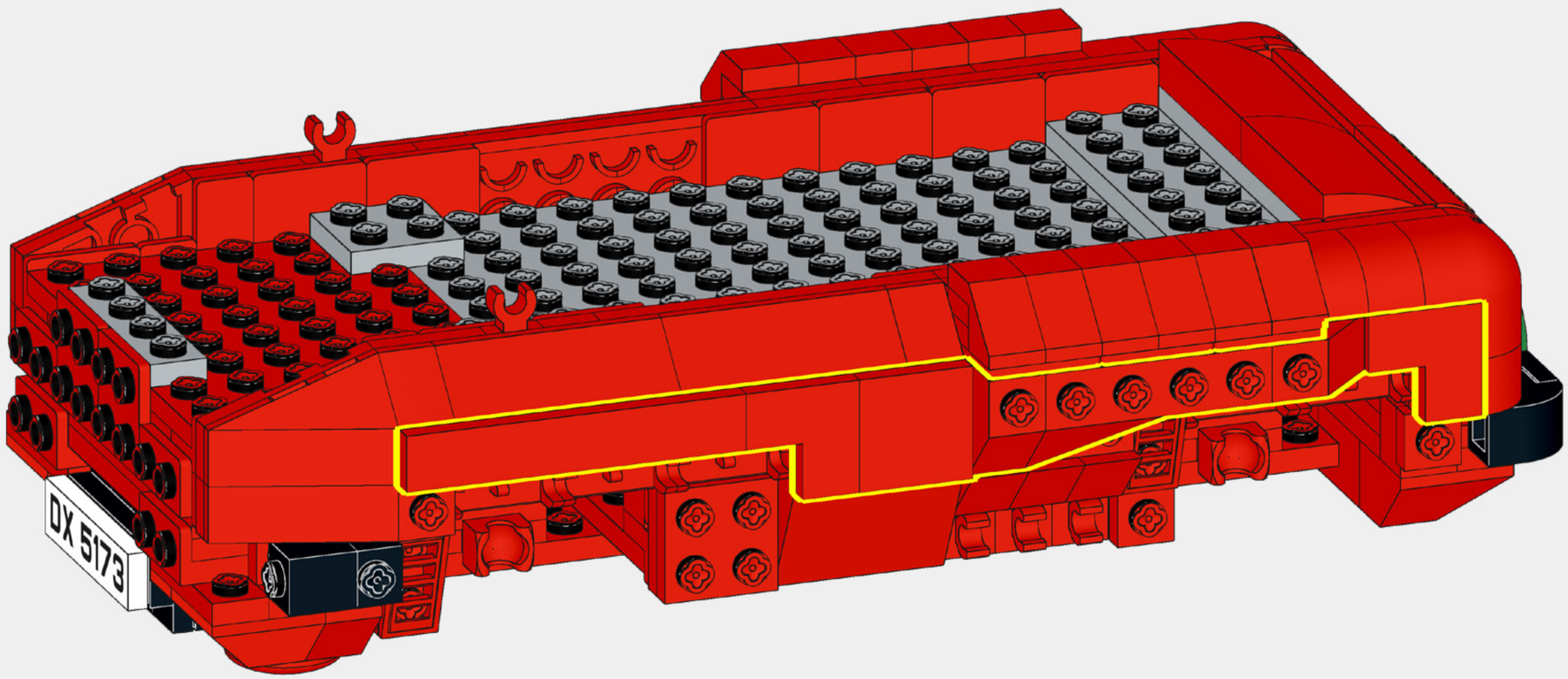

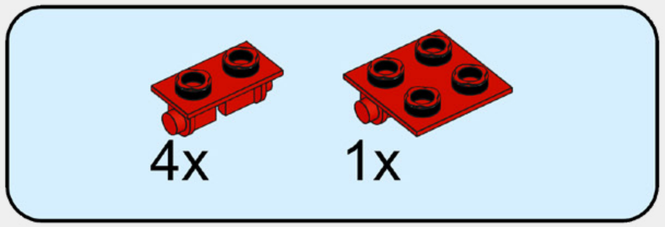

73

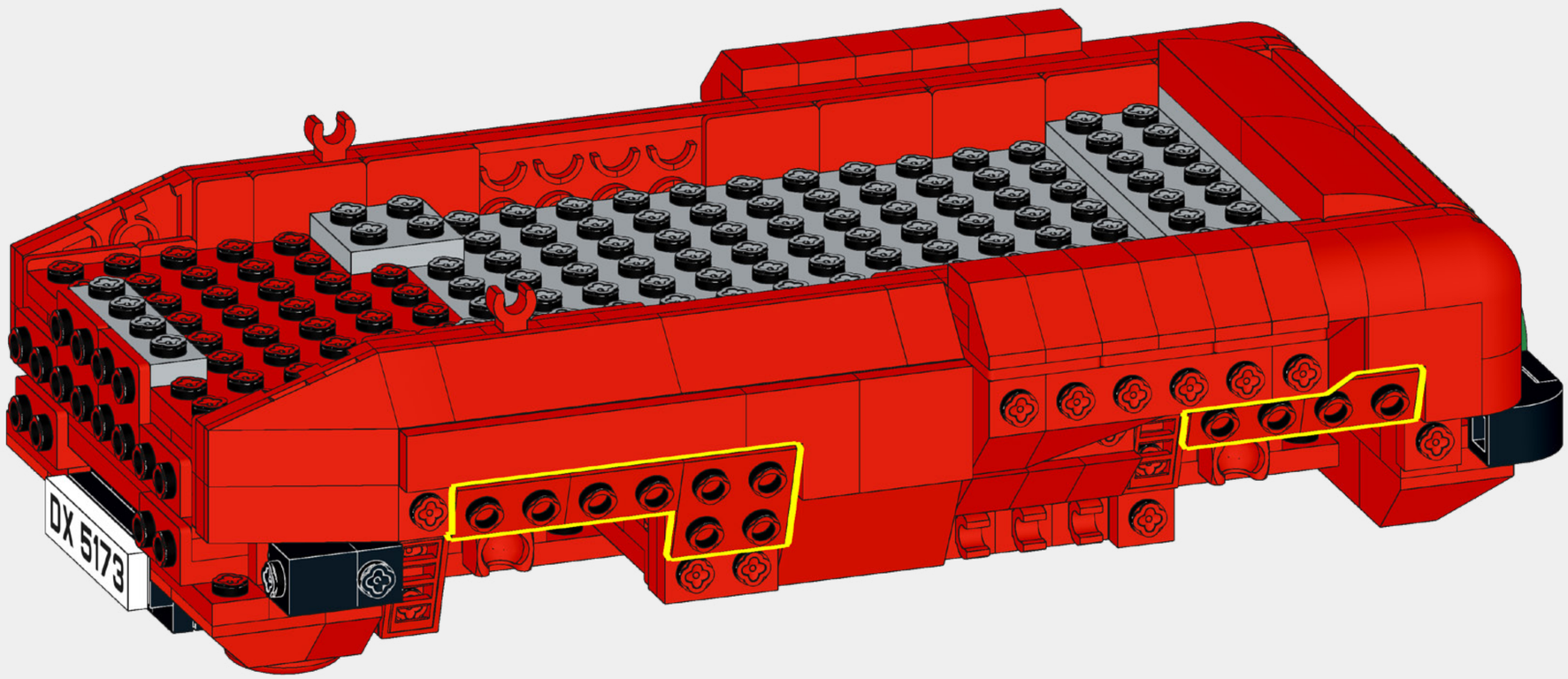

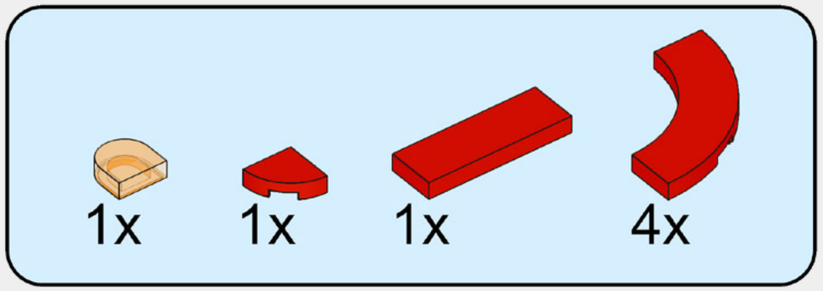

74

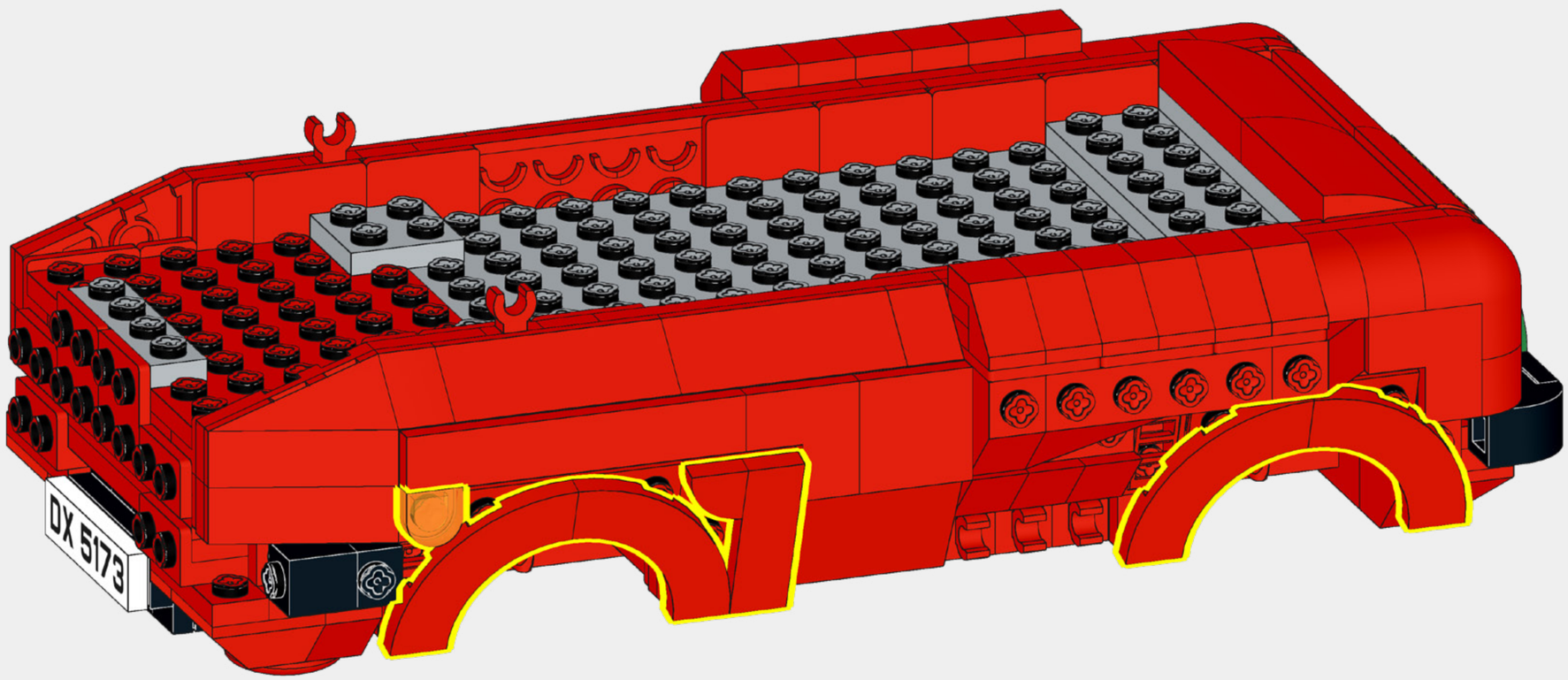

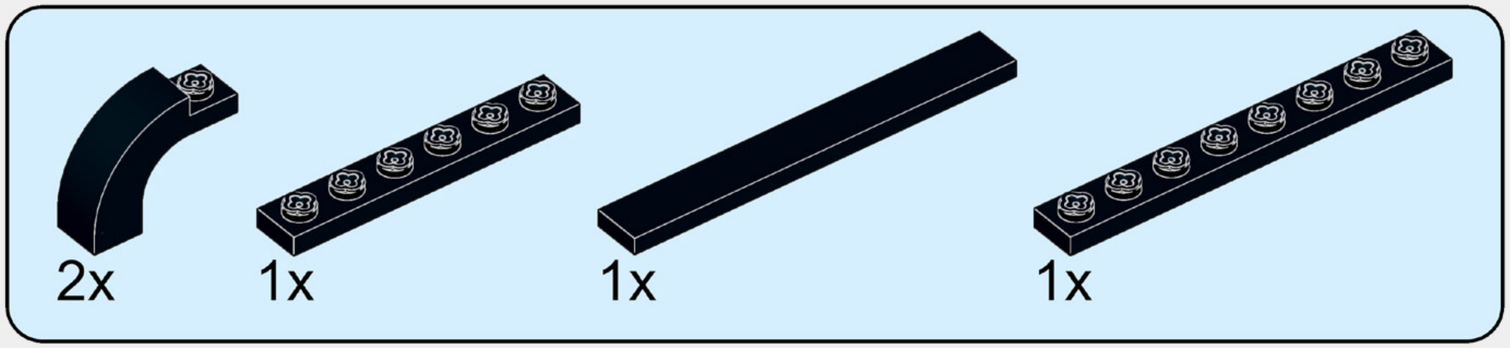

75

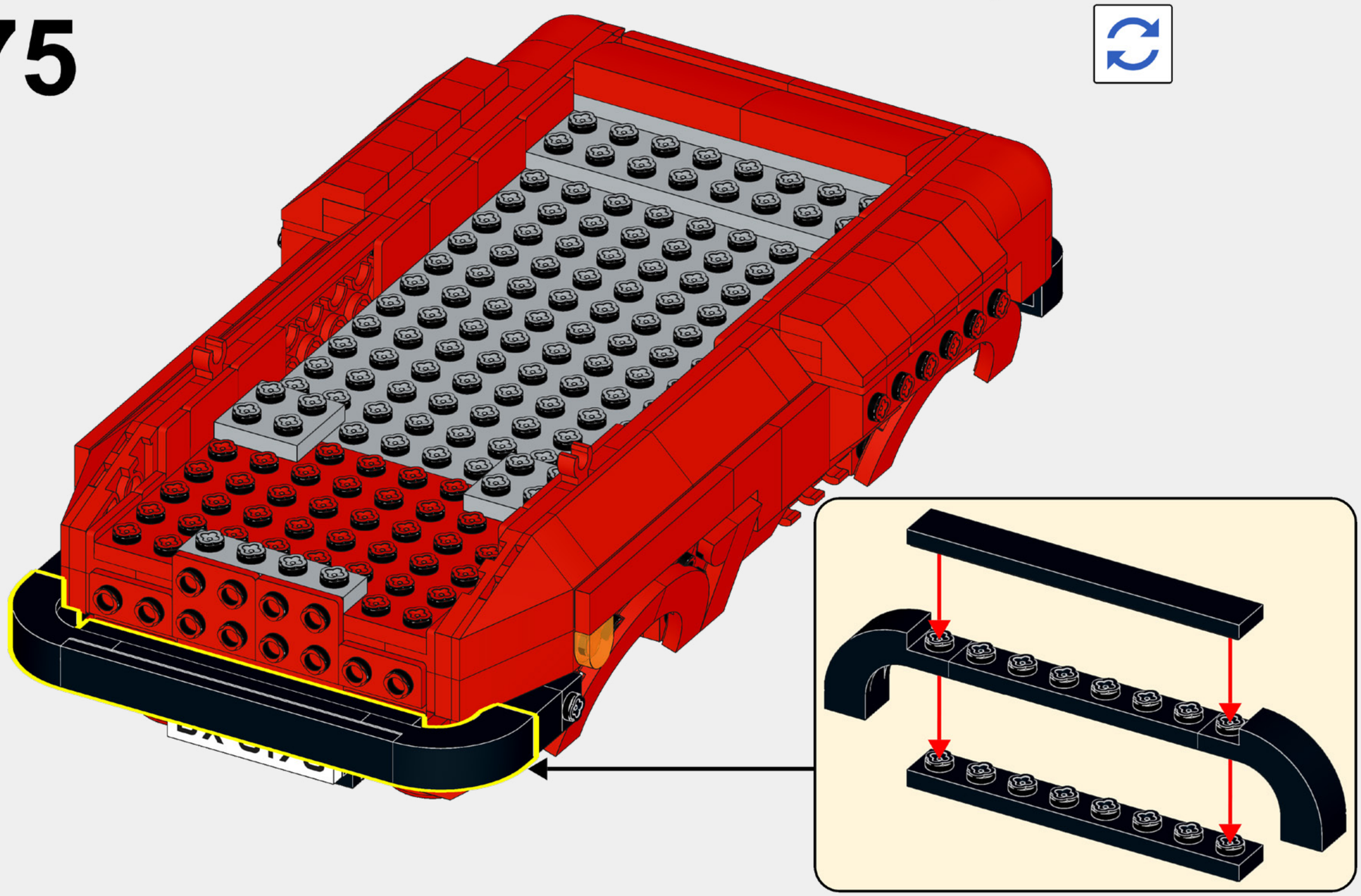

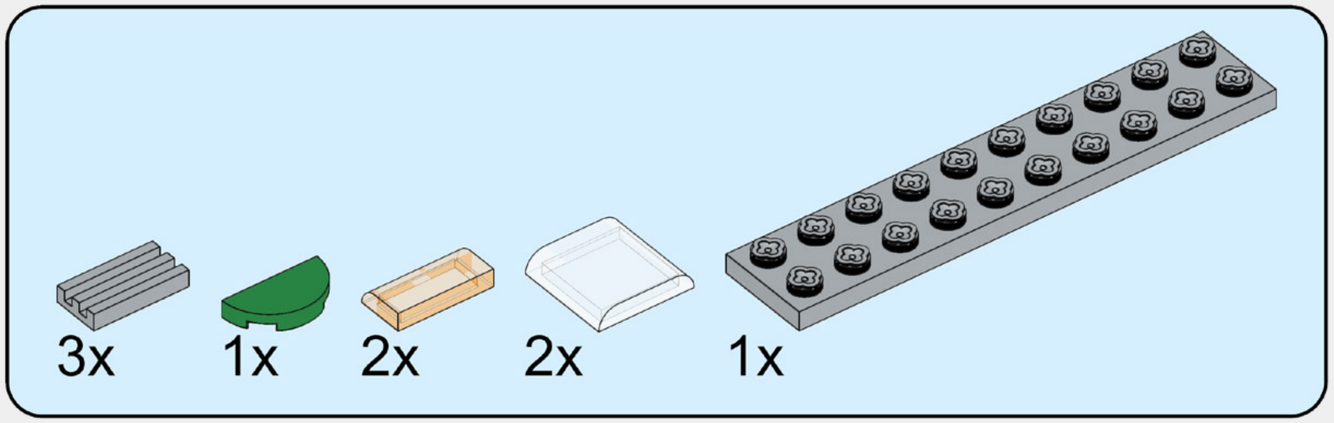

76

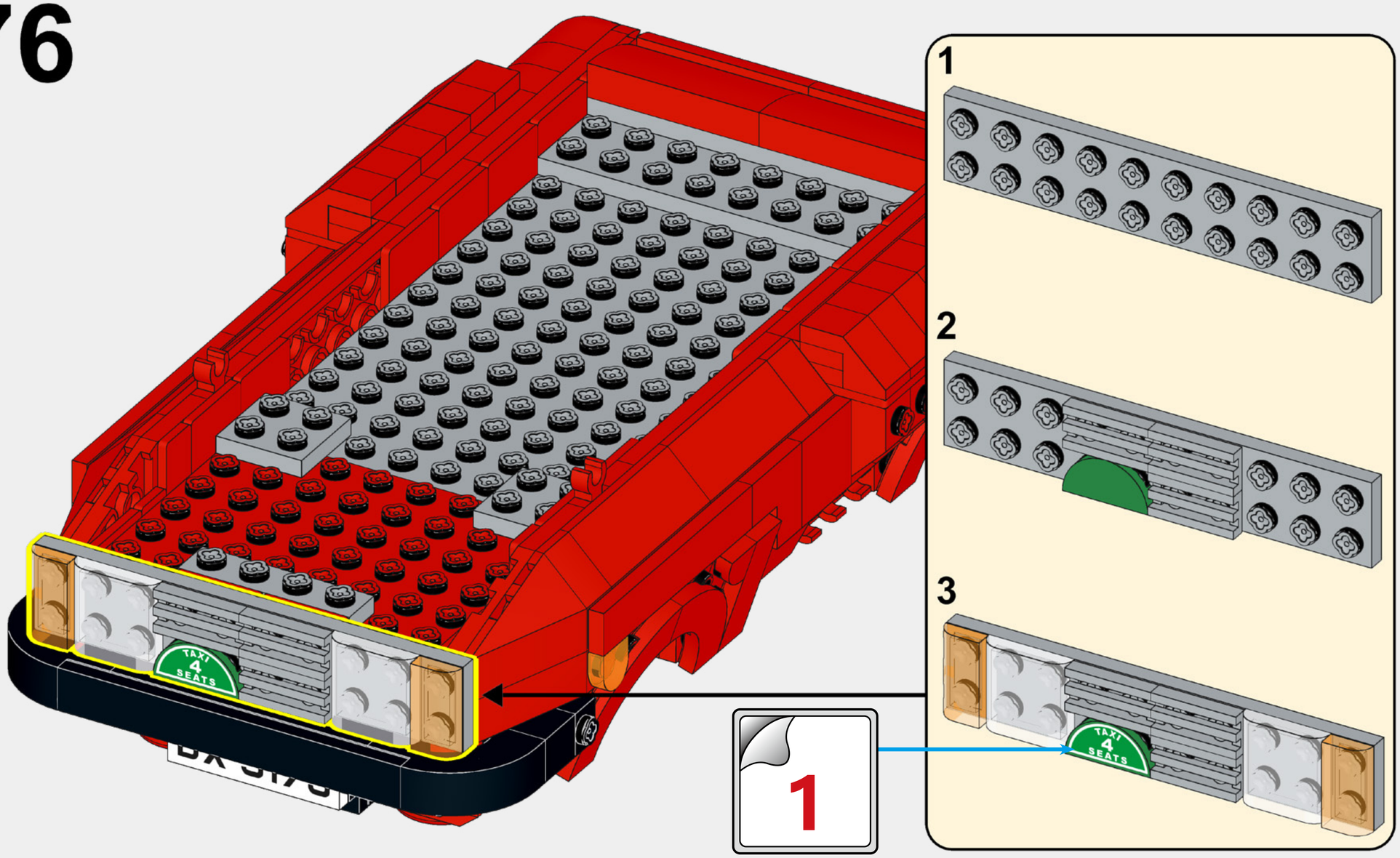

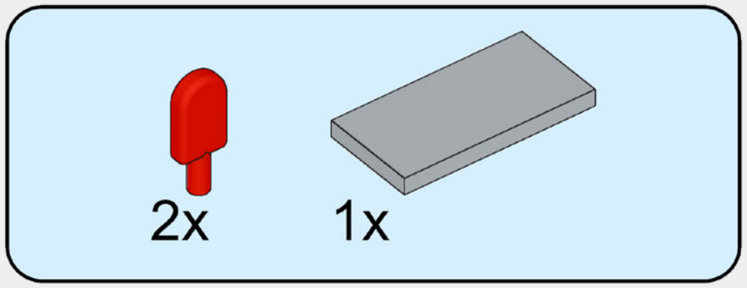

77

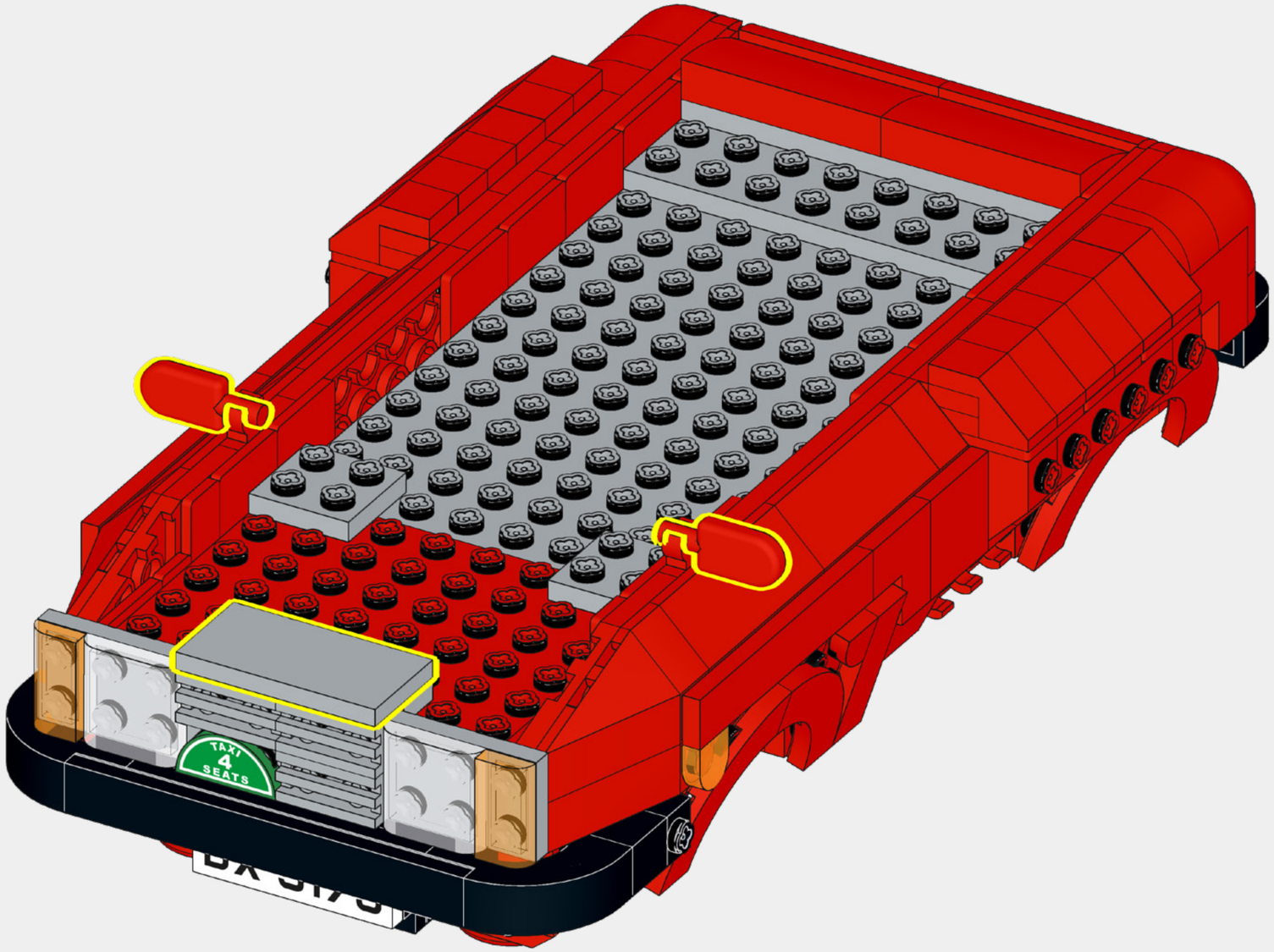

4-5

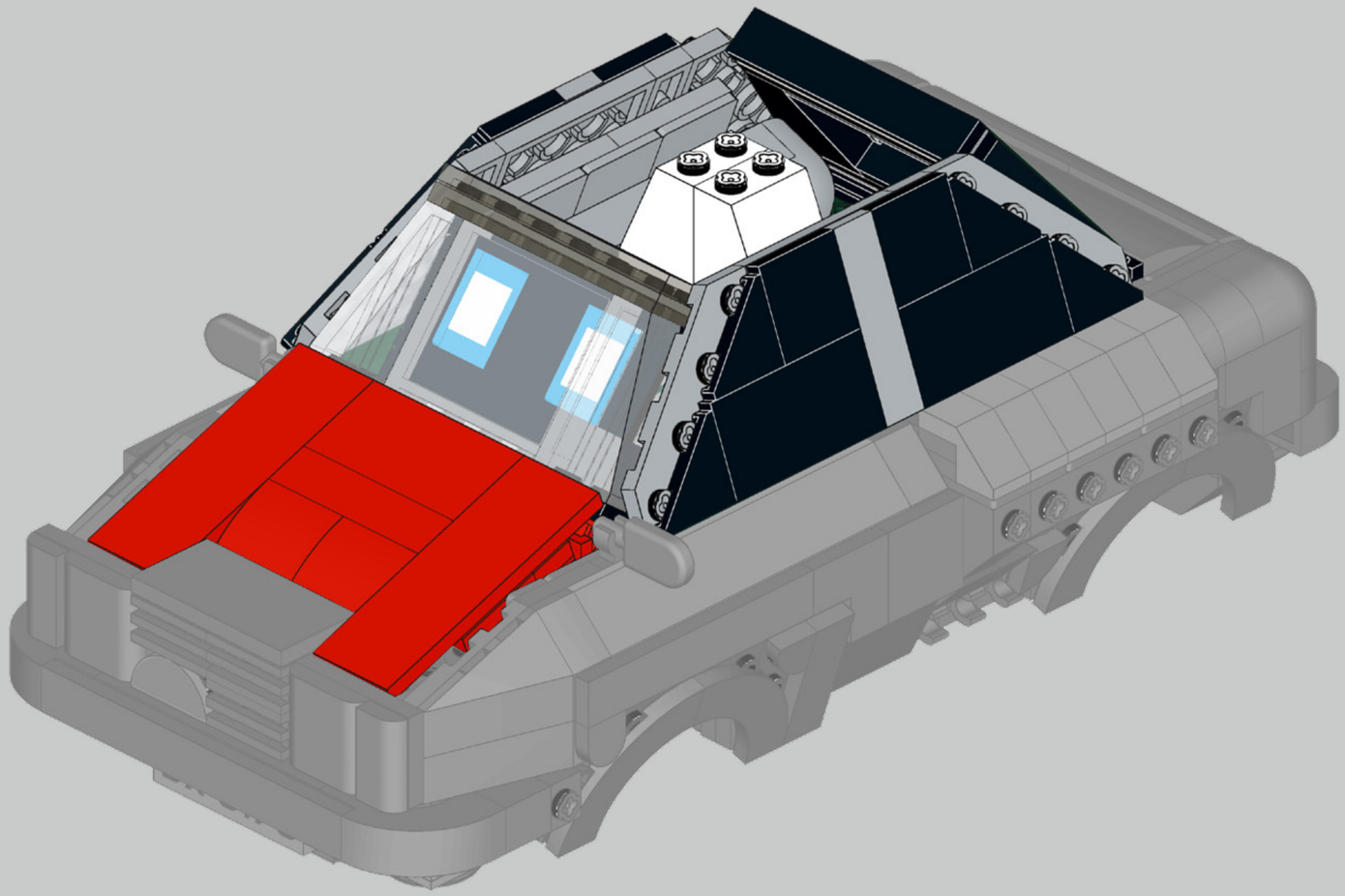

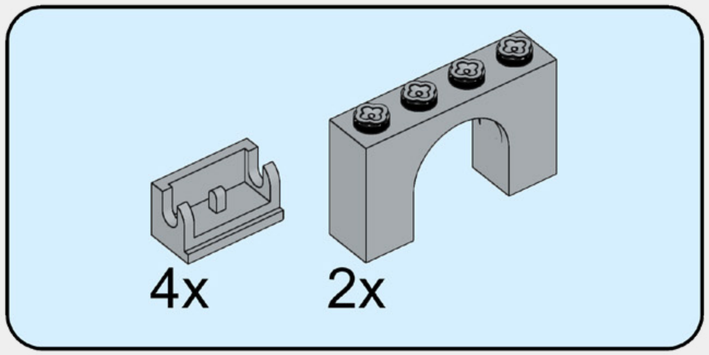

78

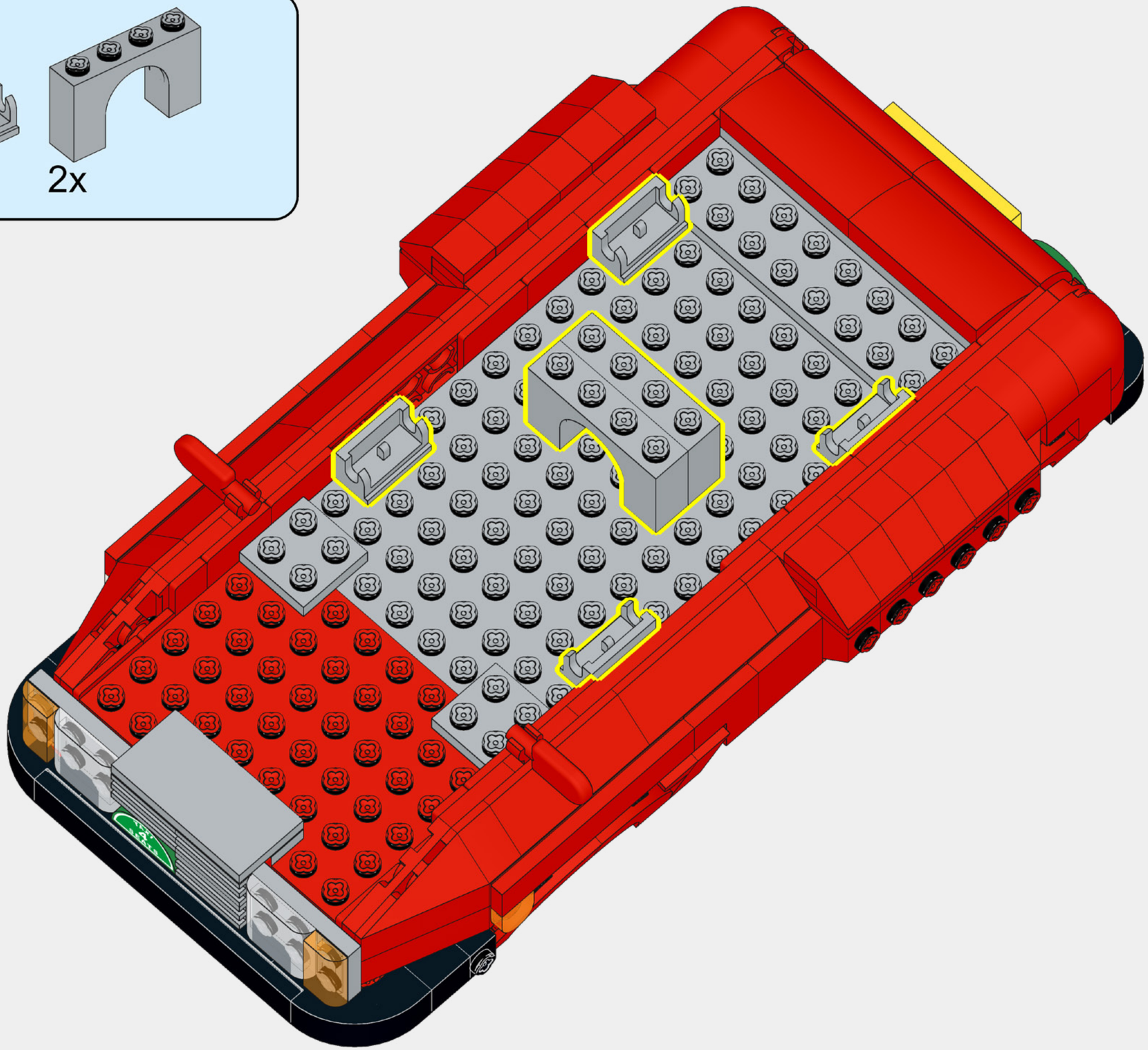

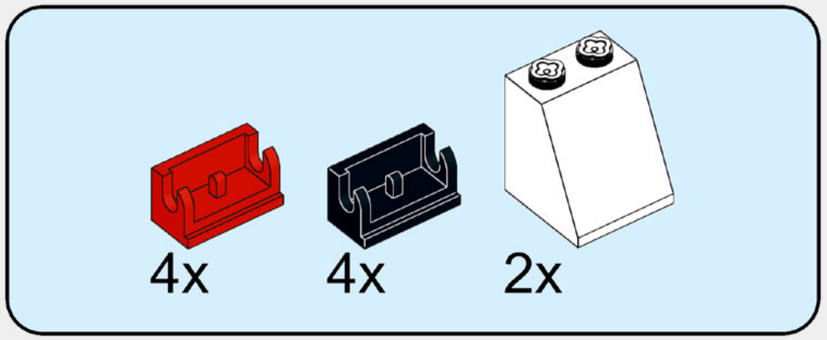

79

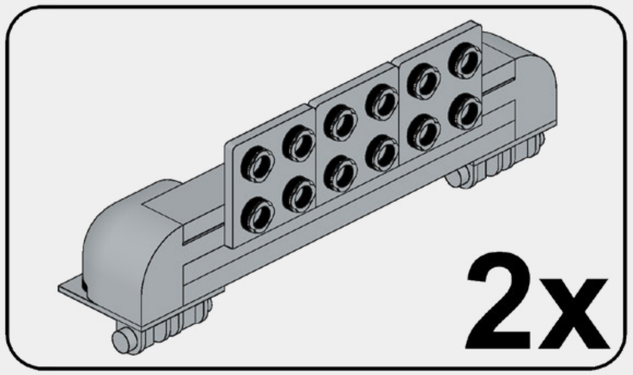

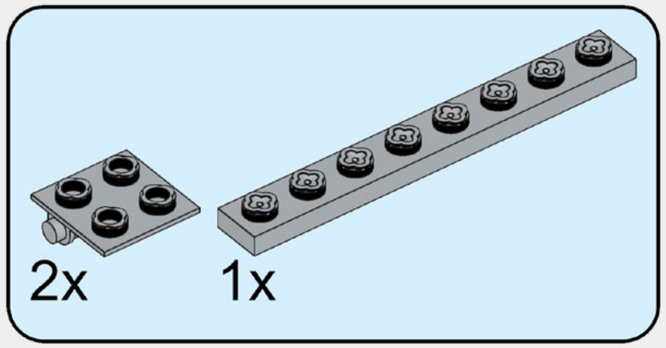

80

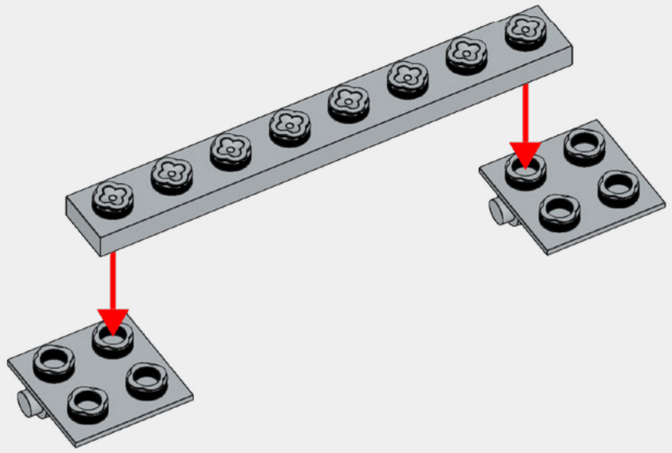

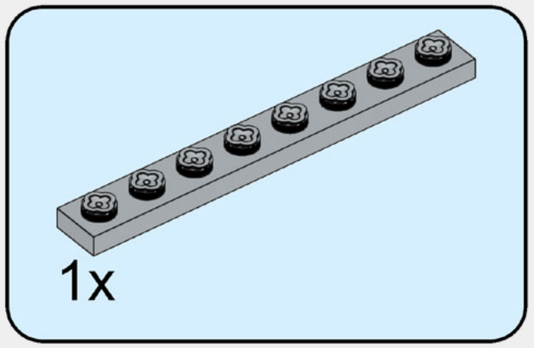

81

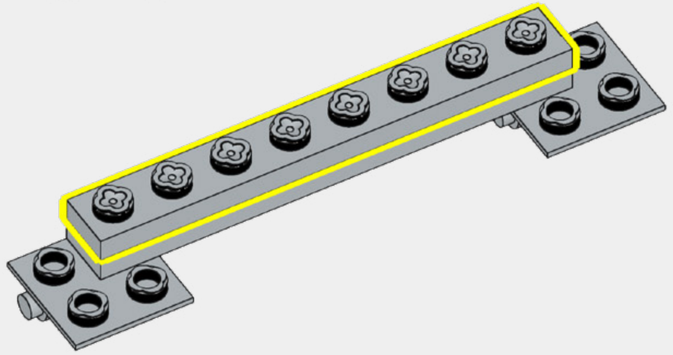

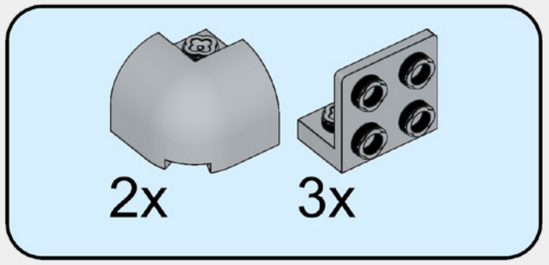

82

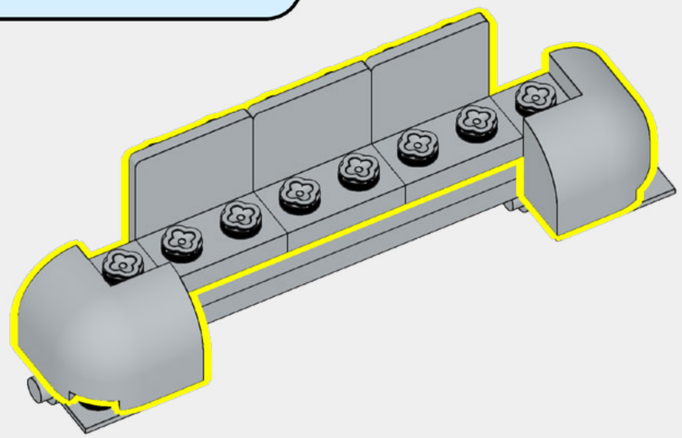

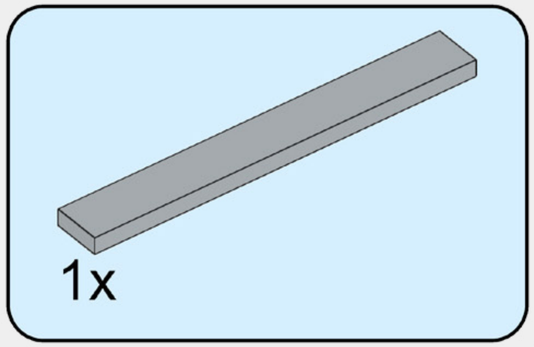

83

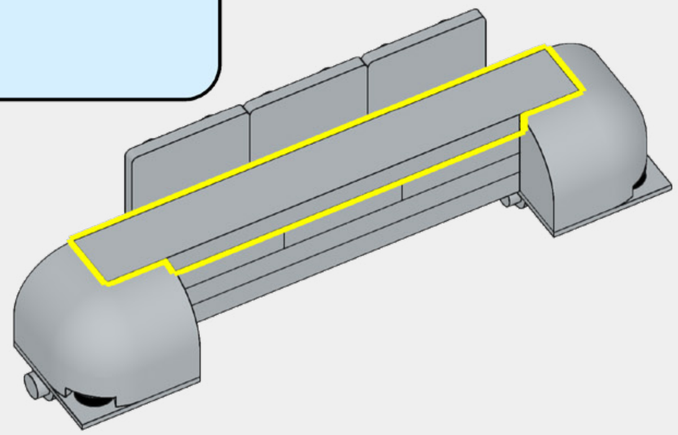

84

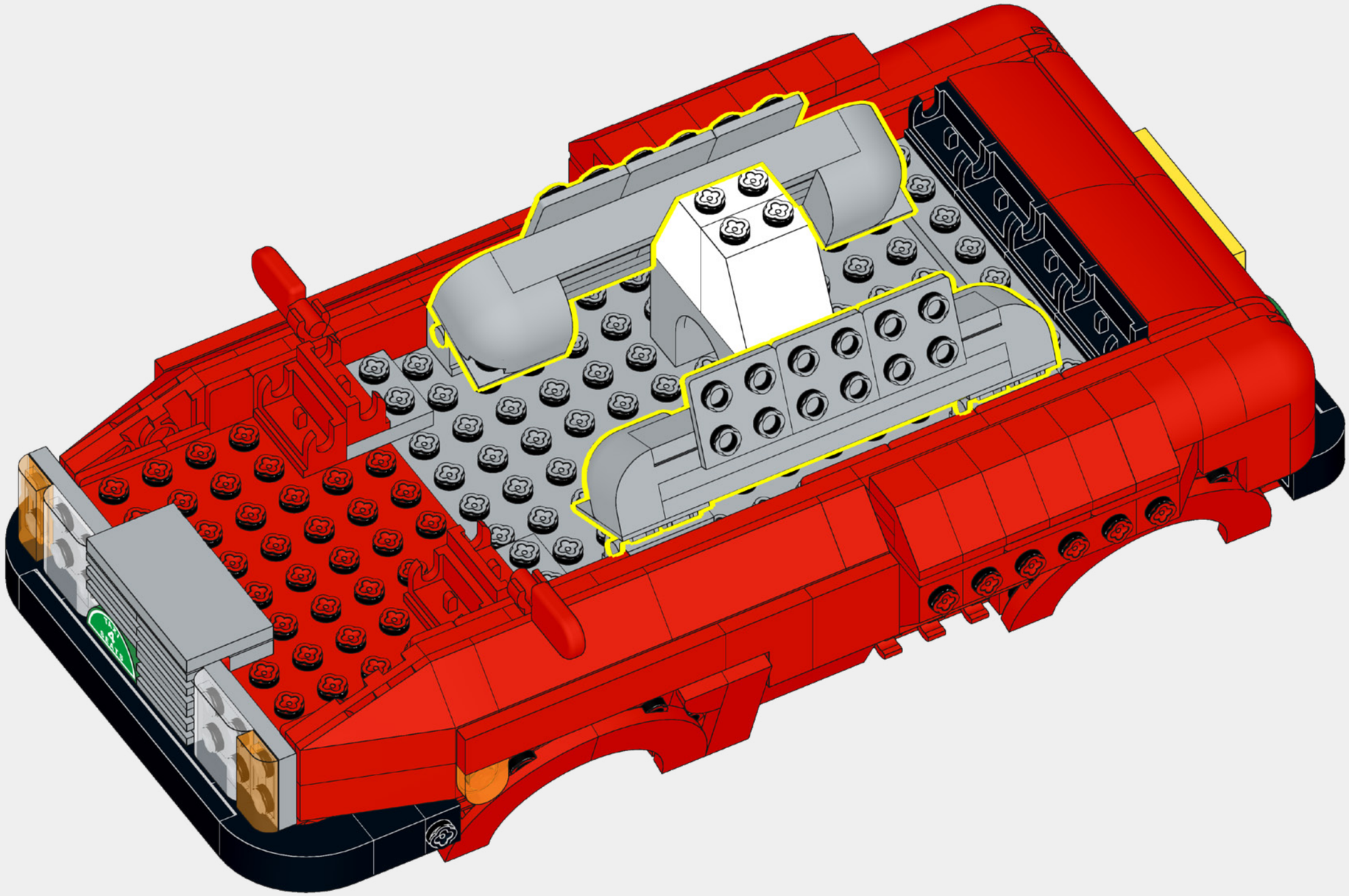

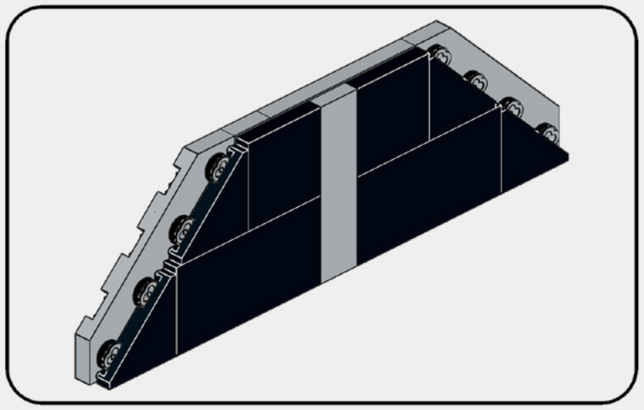

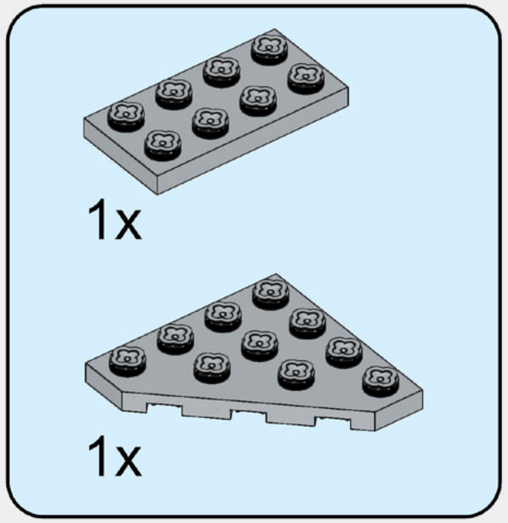

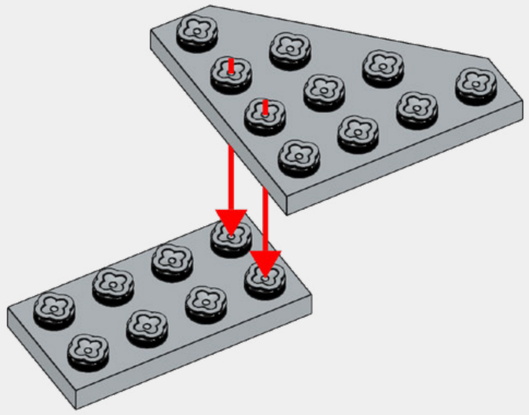

85

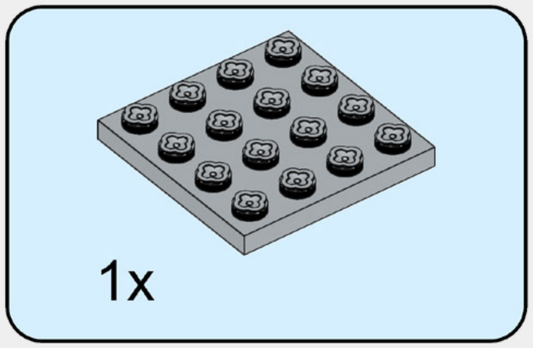

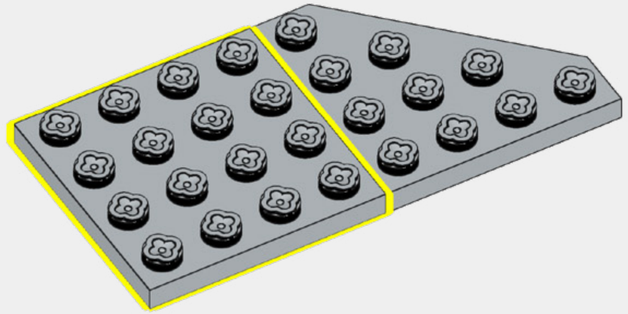

86

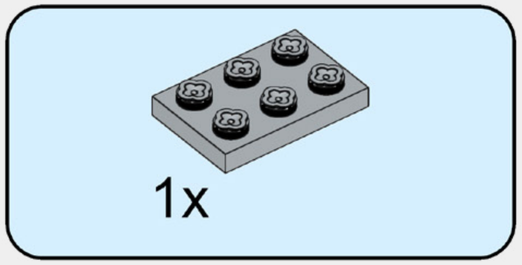

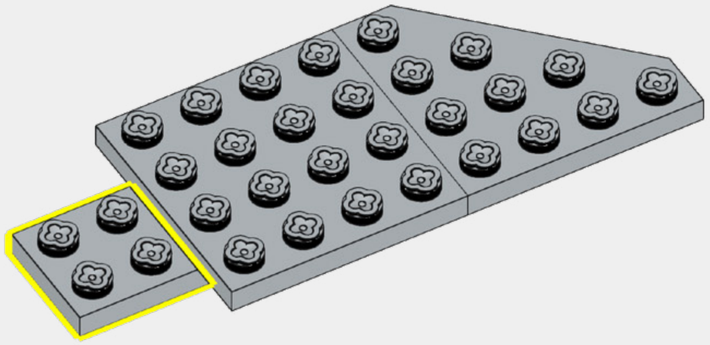

87

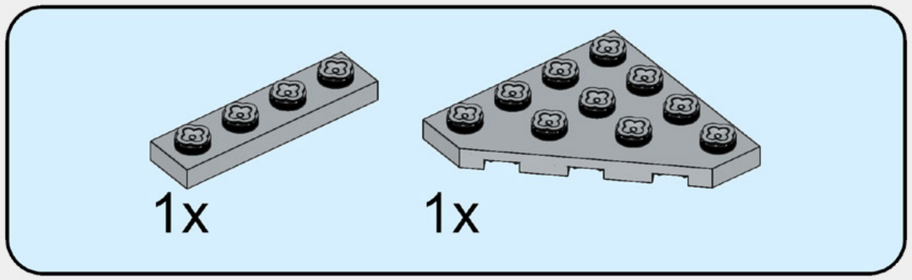

88

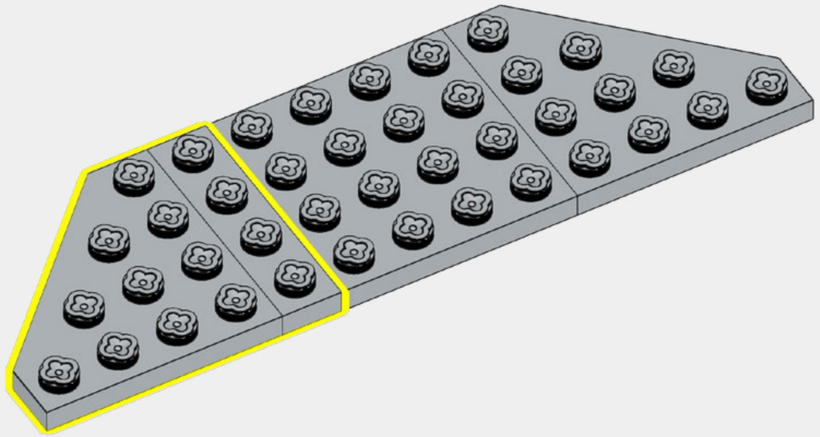

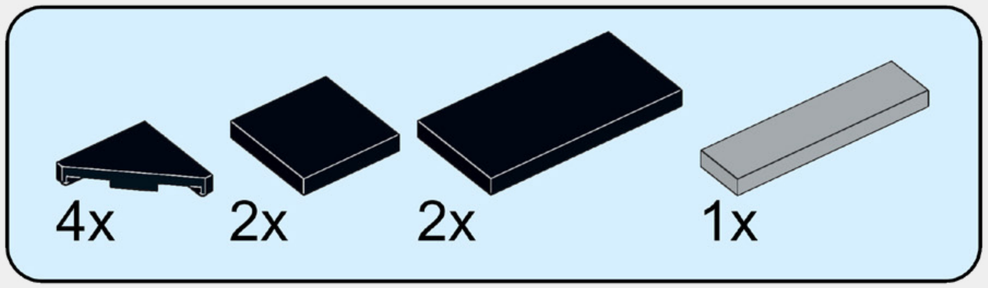

89

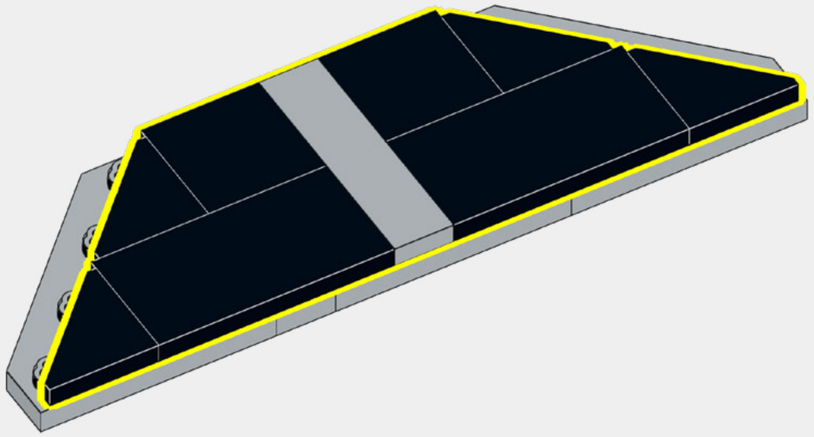

90

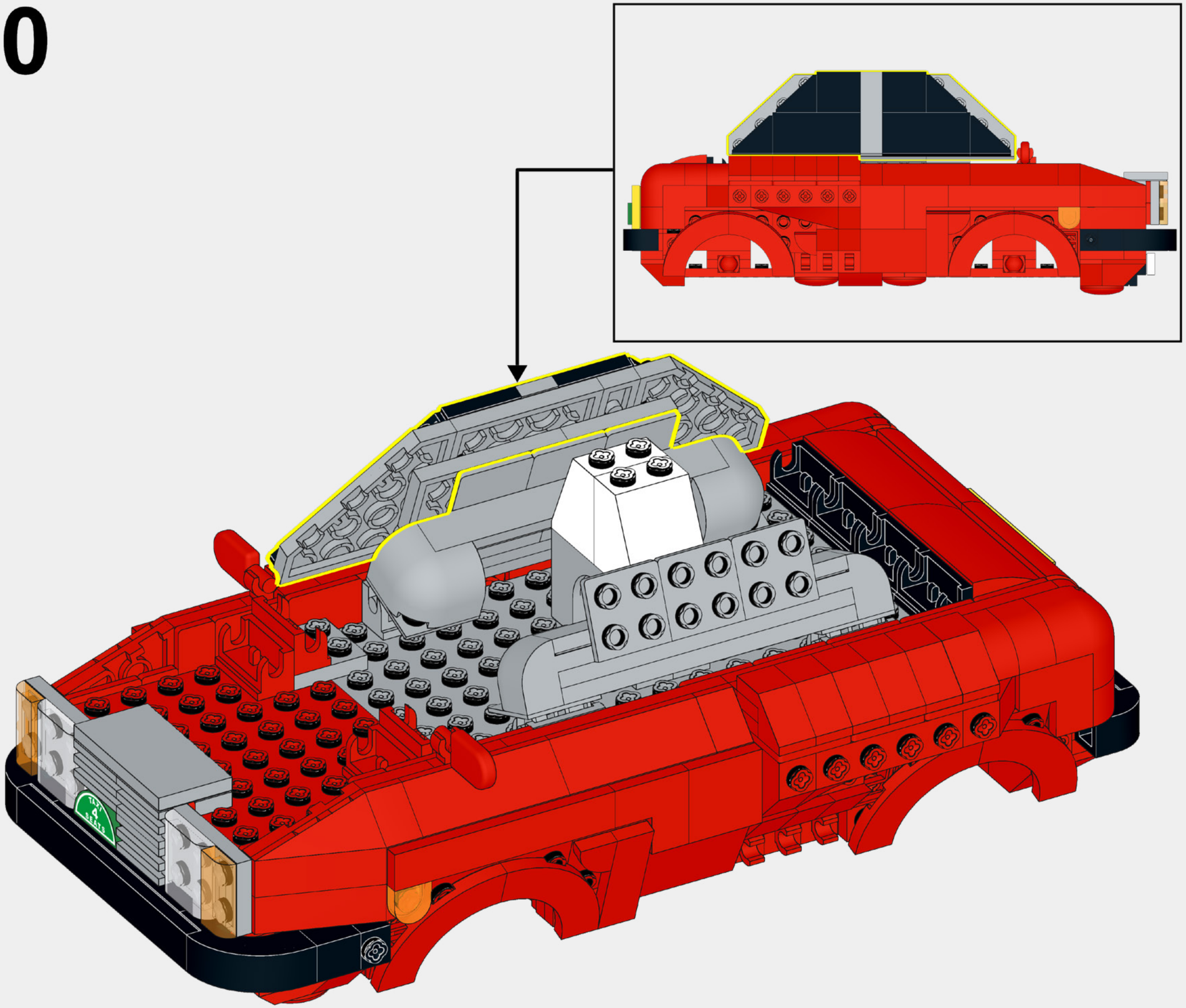

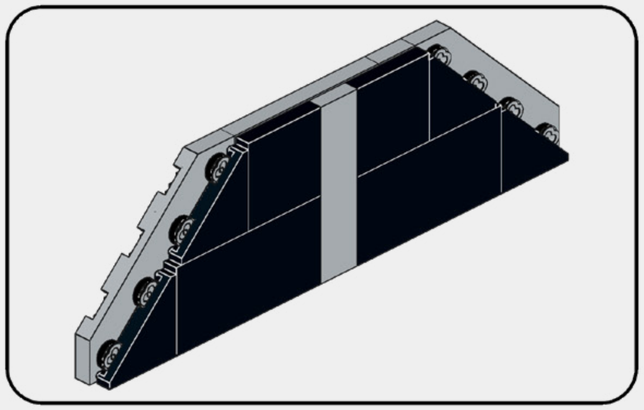

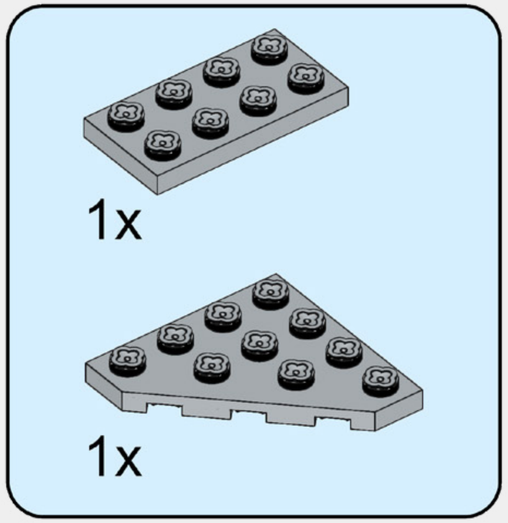

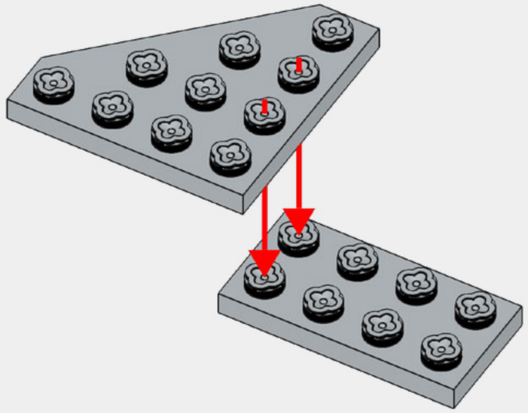

91

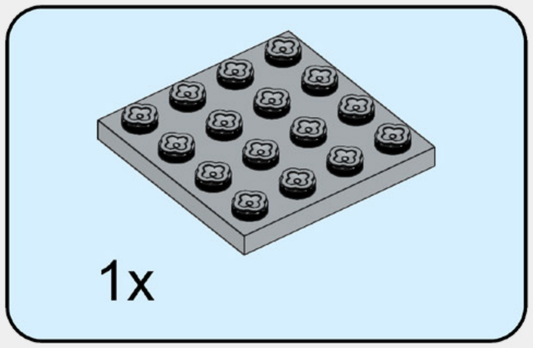

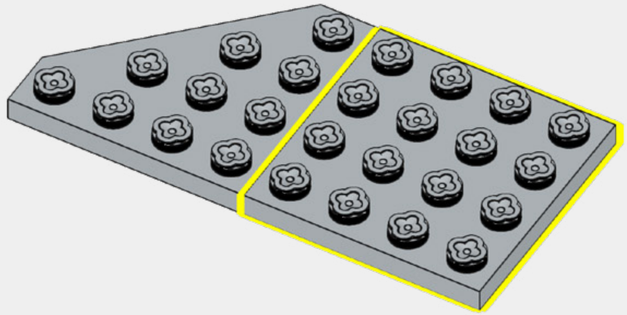

92

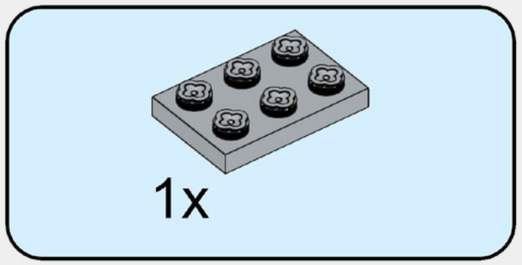

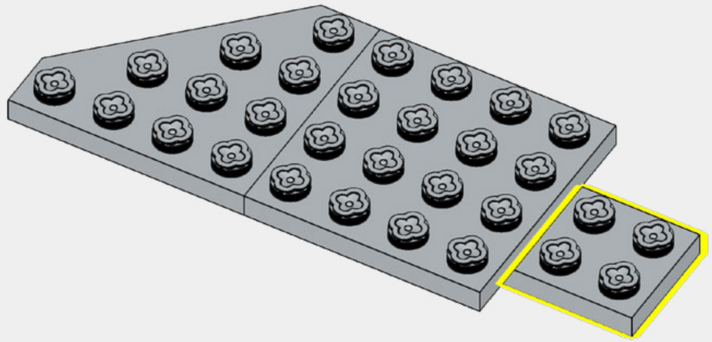

93

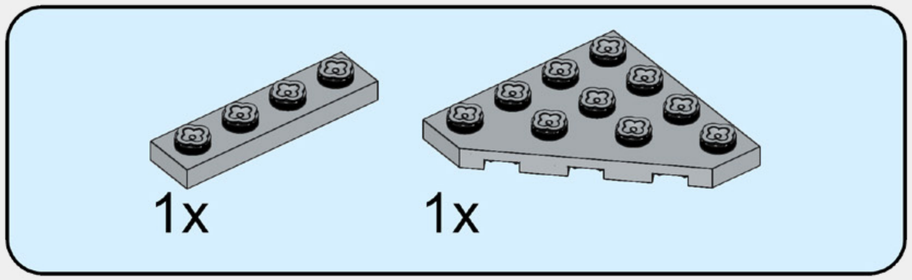

94

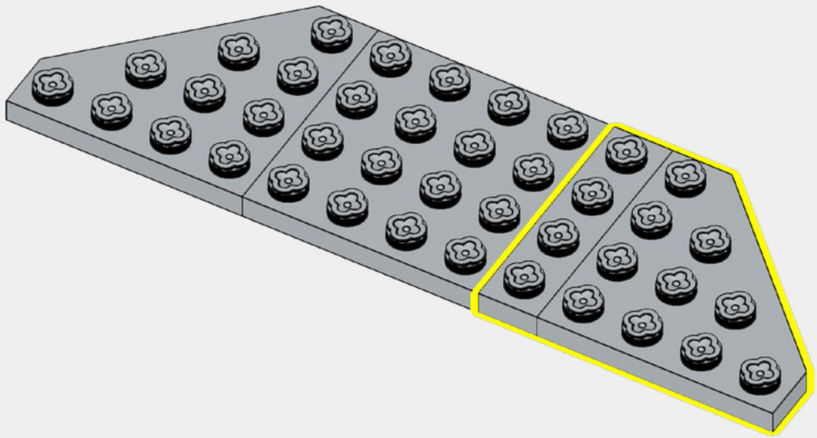

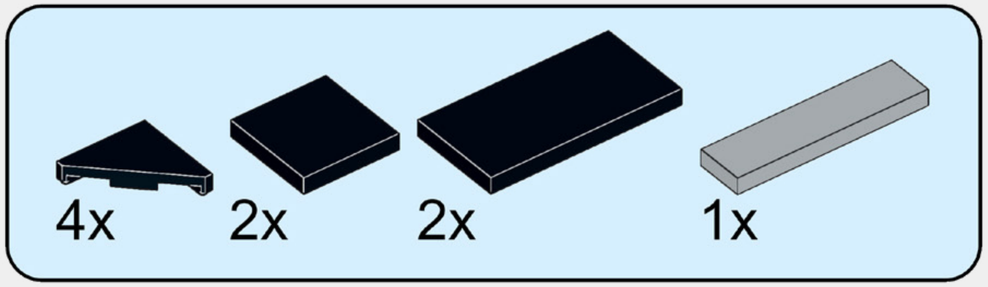

95

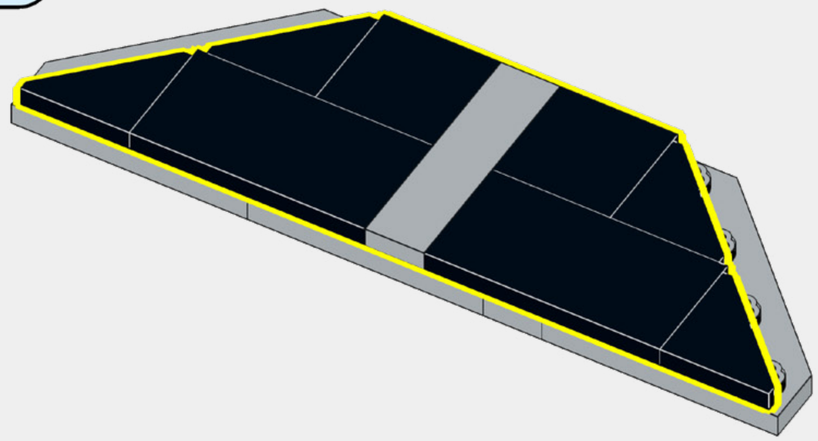

96

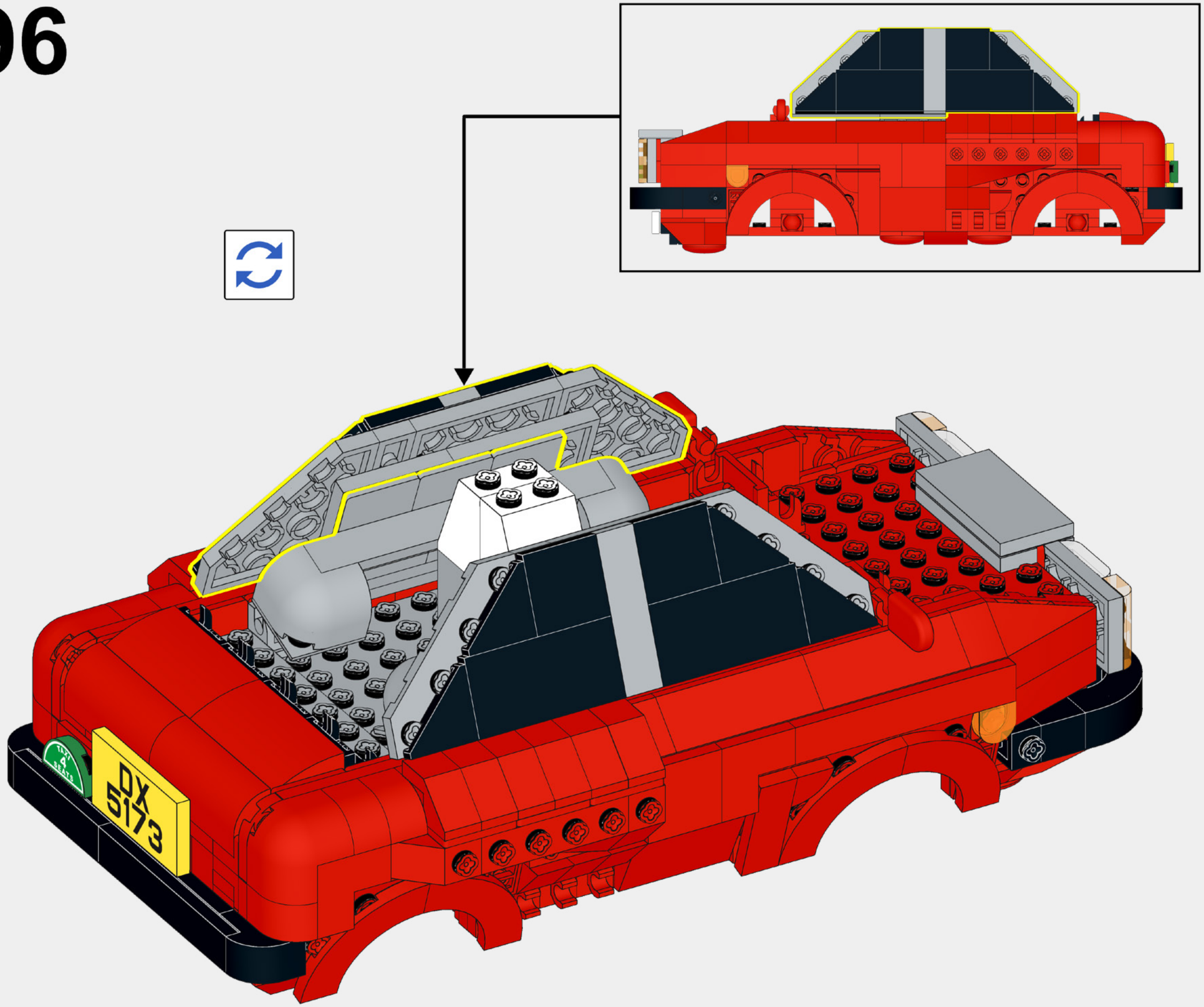

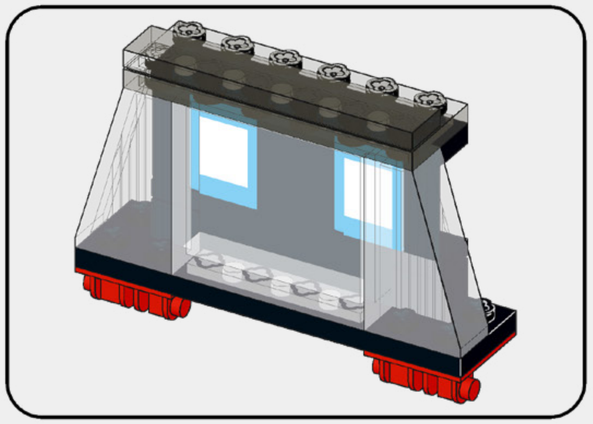

97

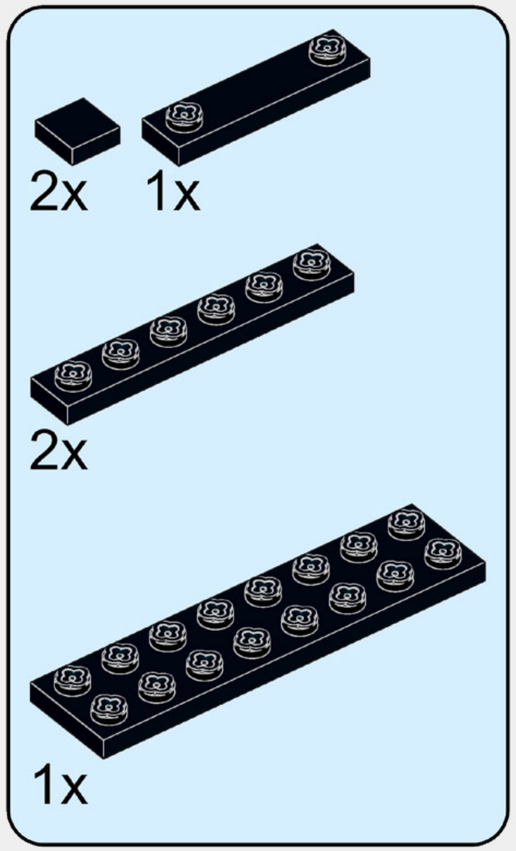

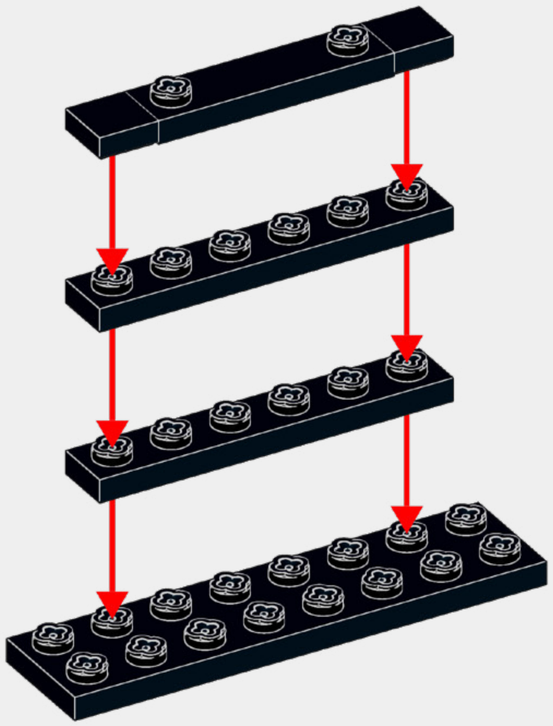

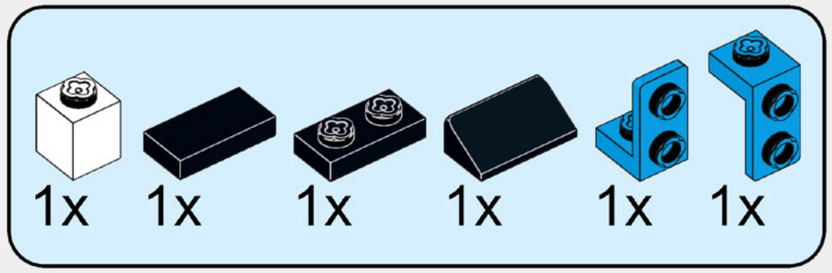

98

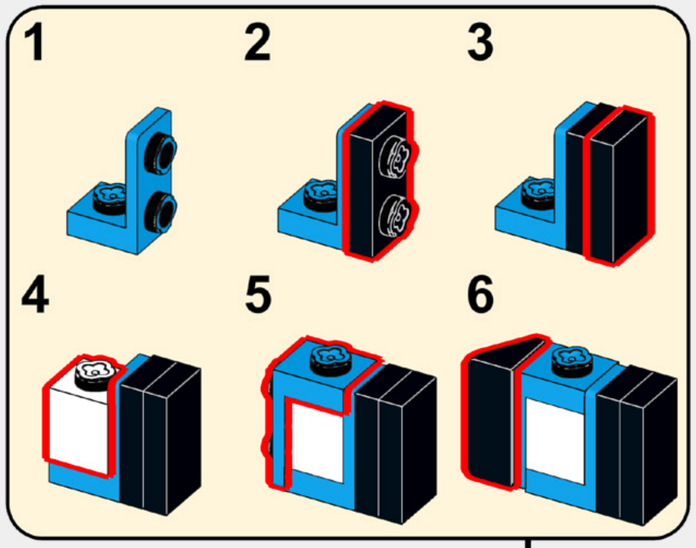

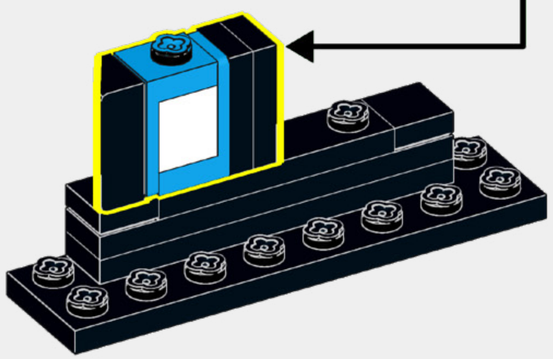

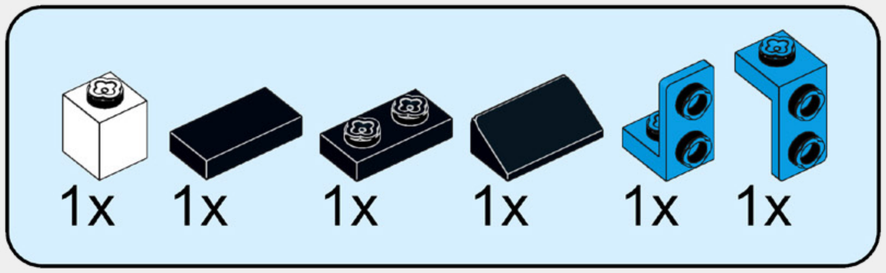

99

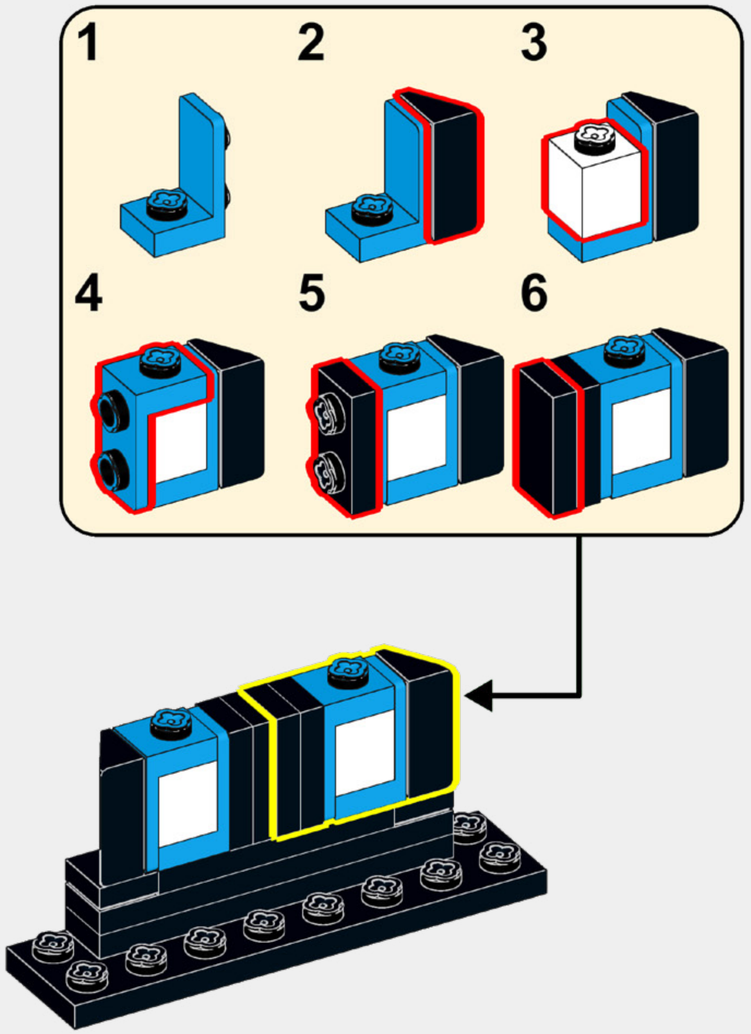

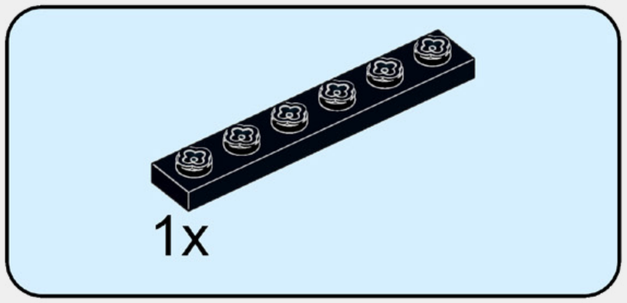

100

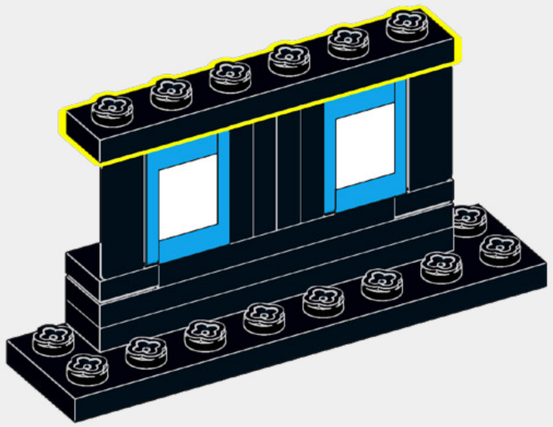

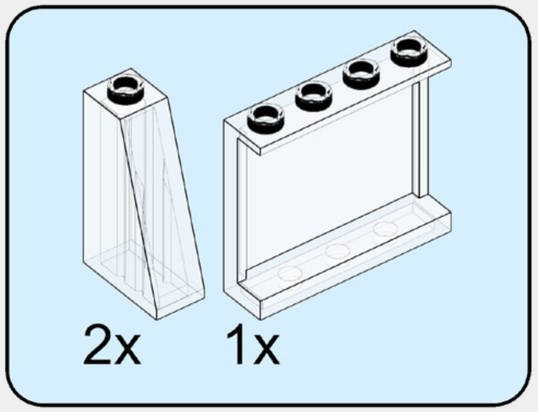

101

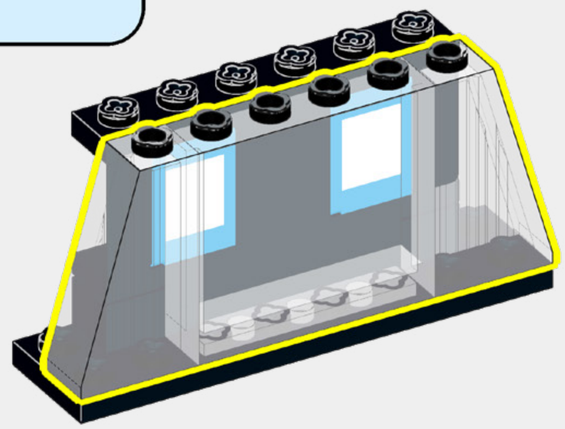

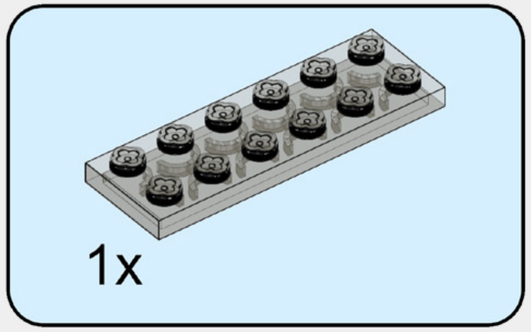

102

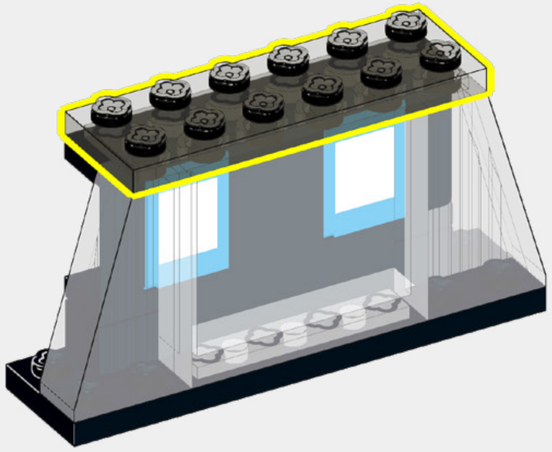

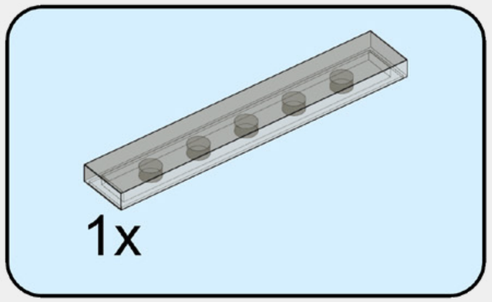

103

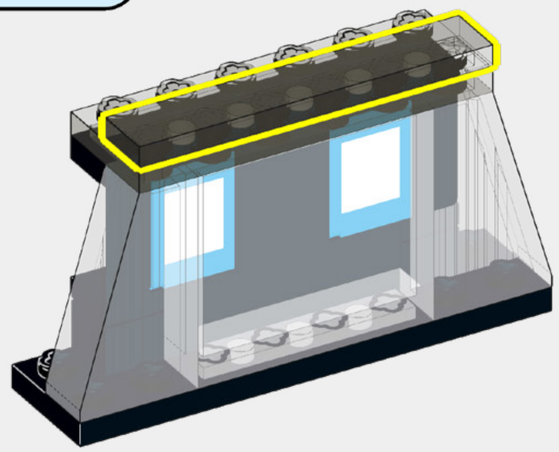

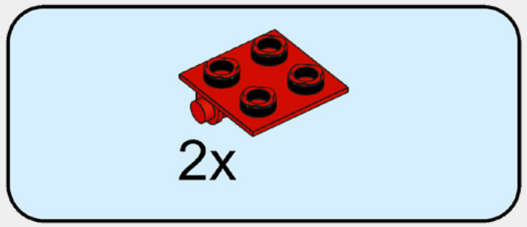

104

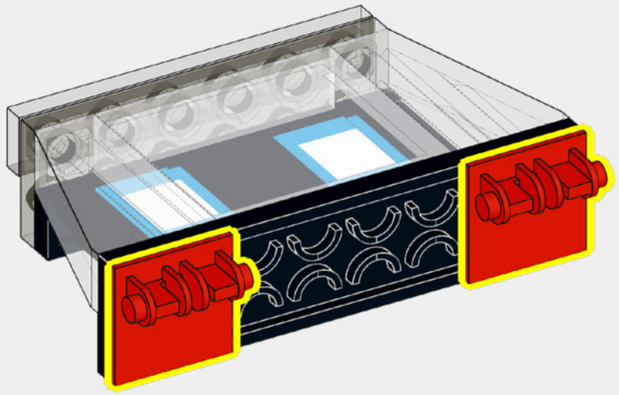

105

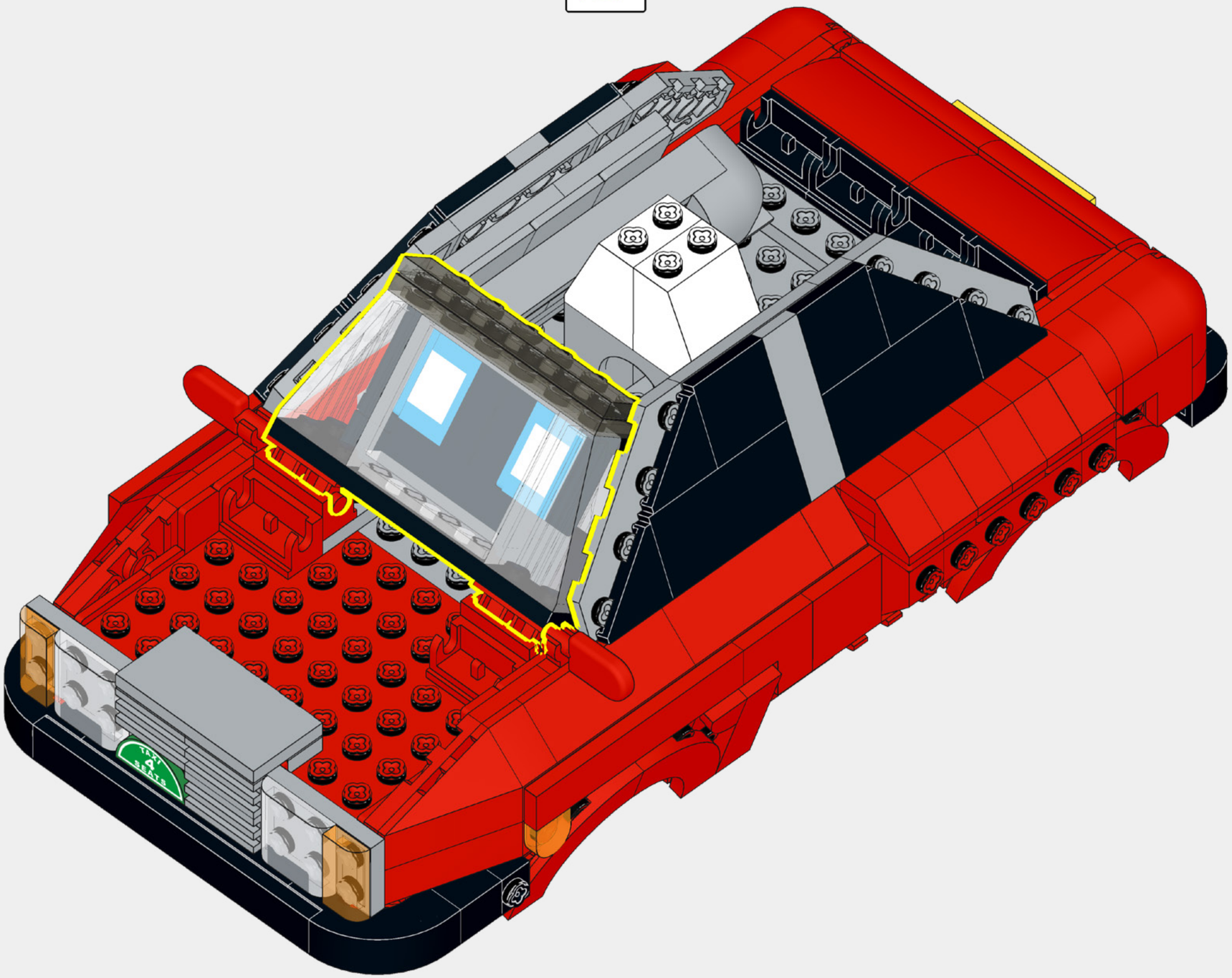

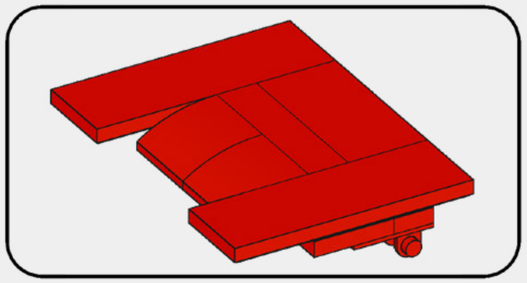

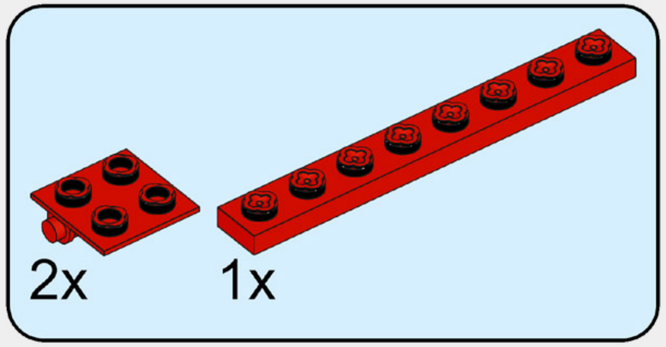

106

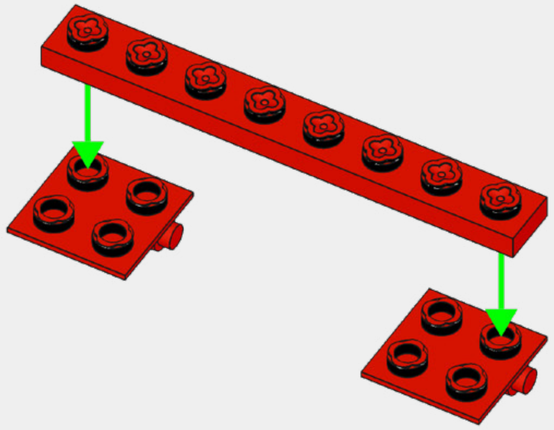

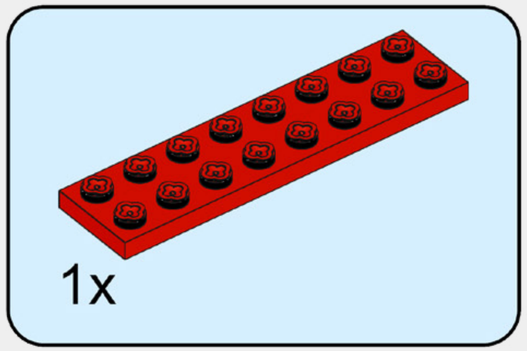

107

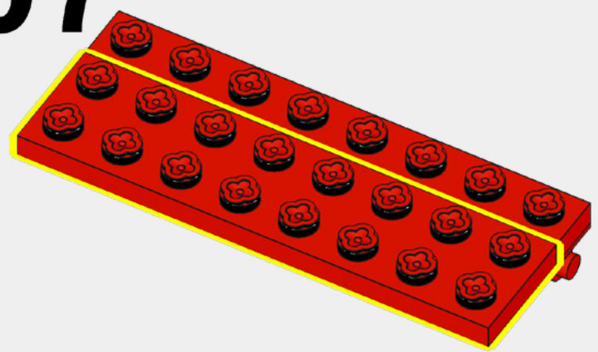

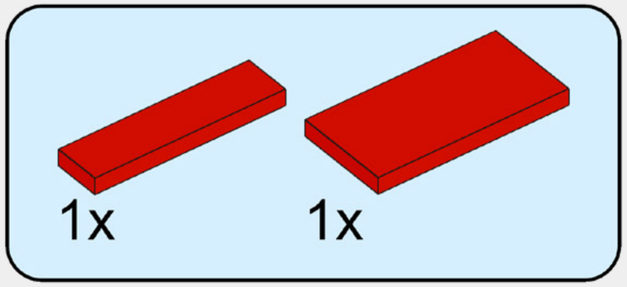

108

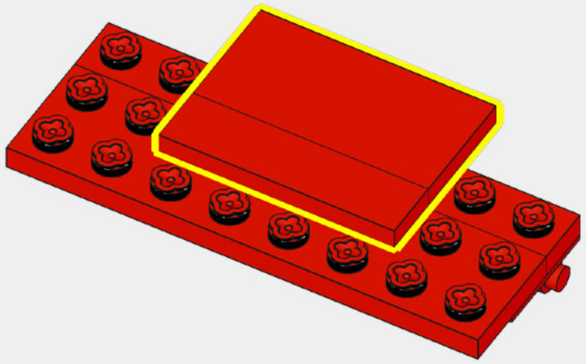

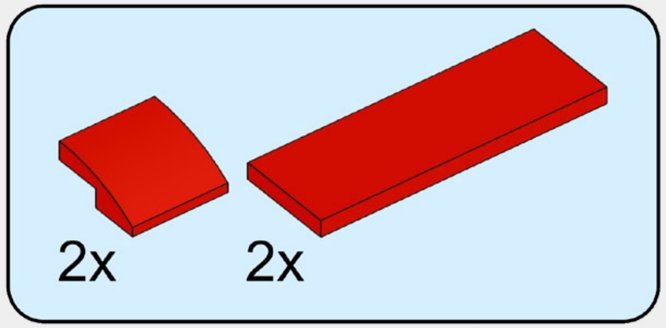

109

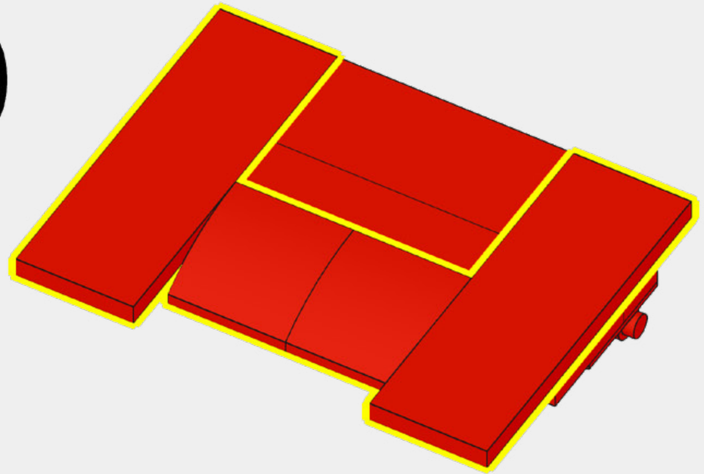

110

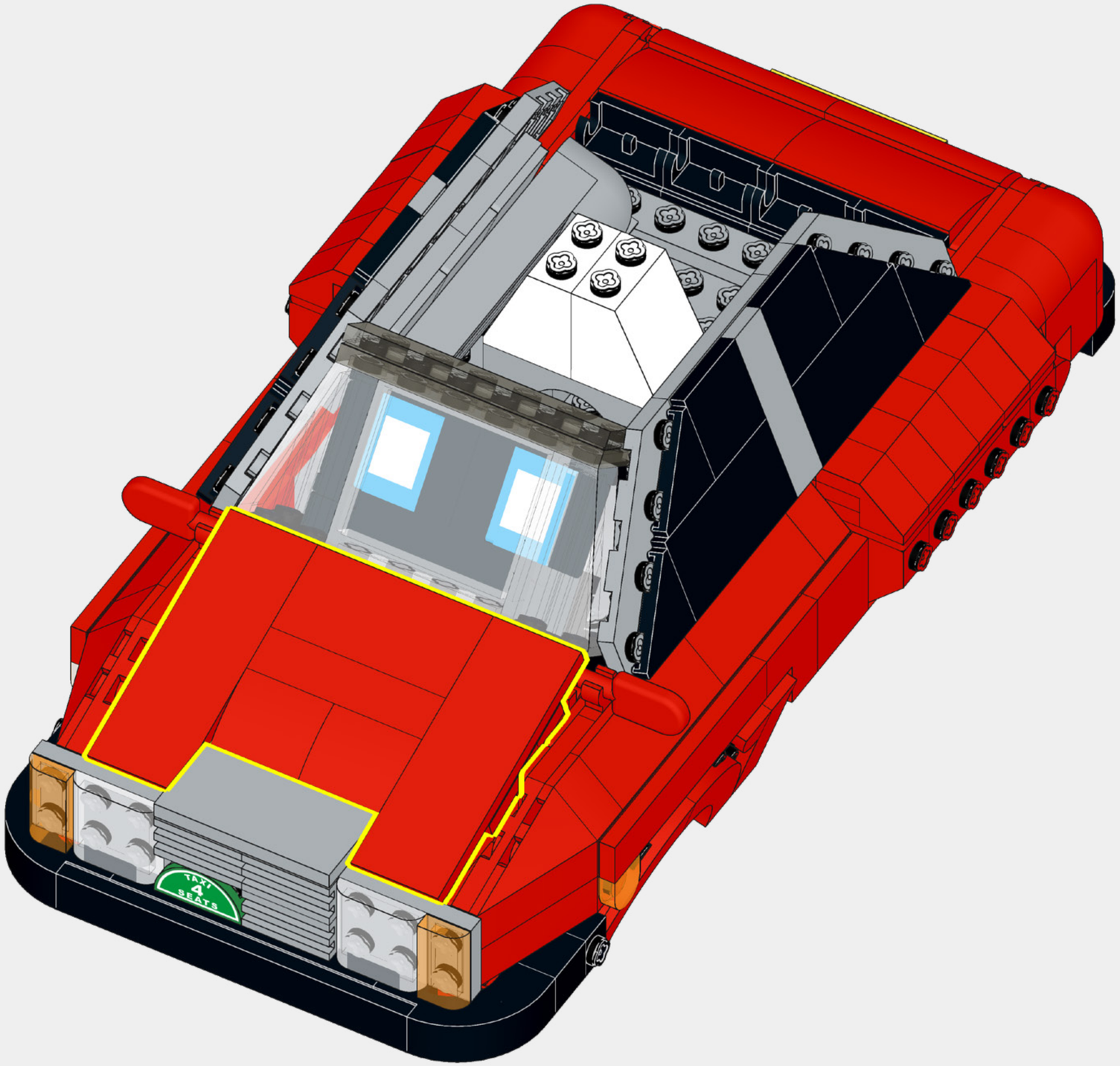

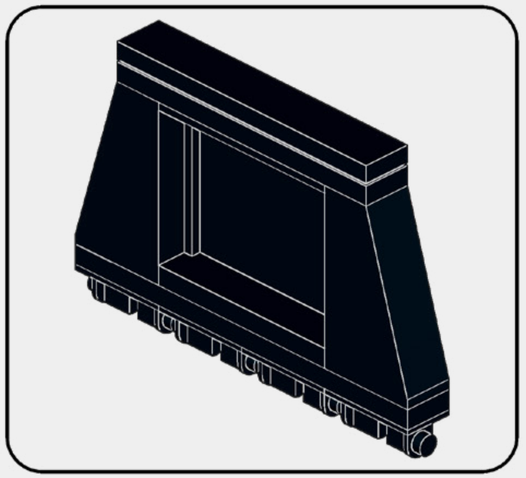

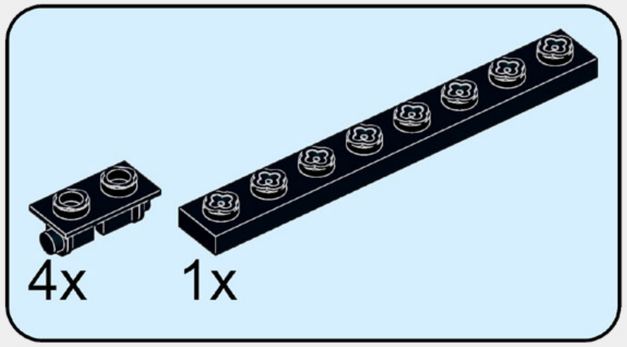

111

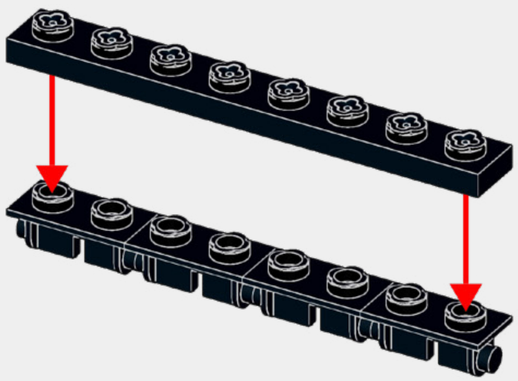

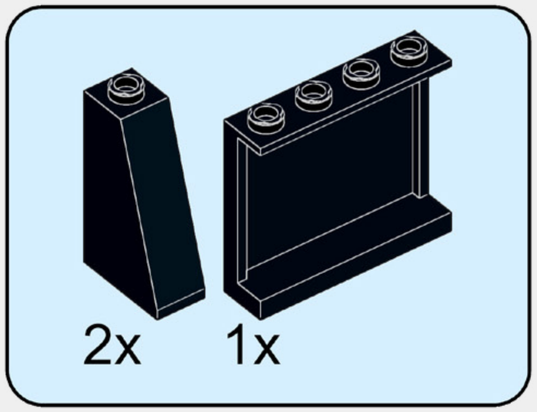

112

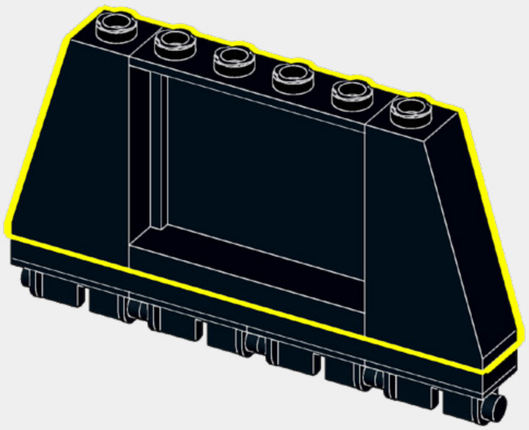

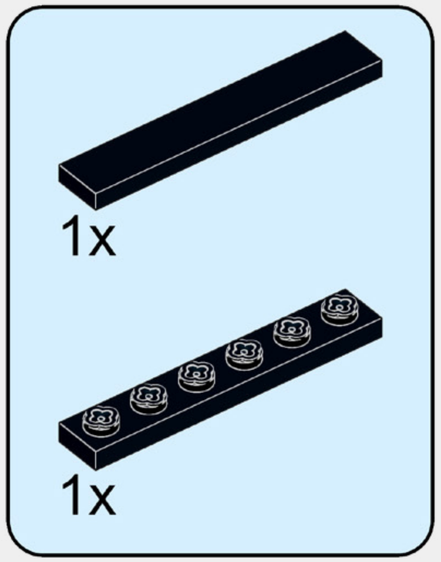

113

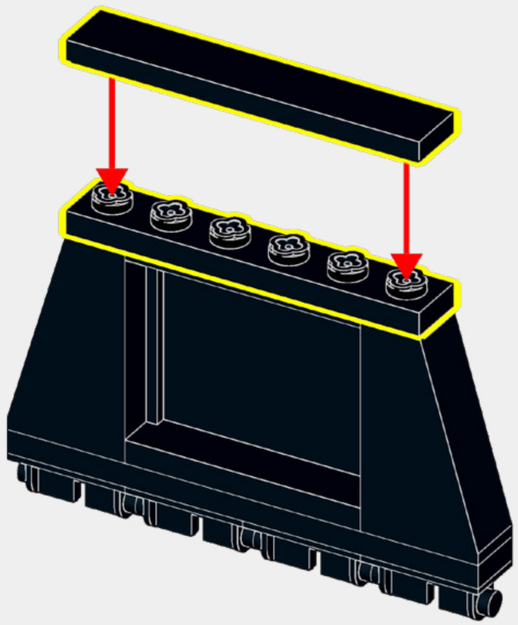

114

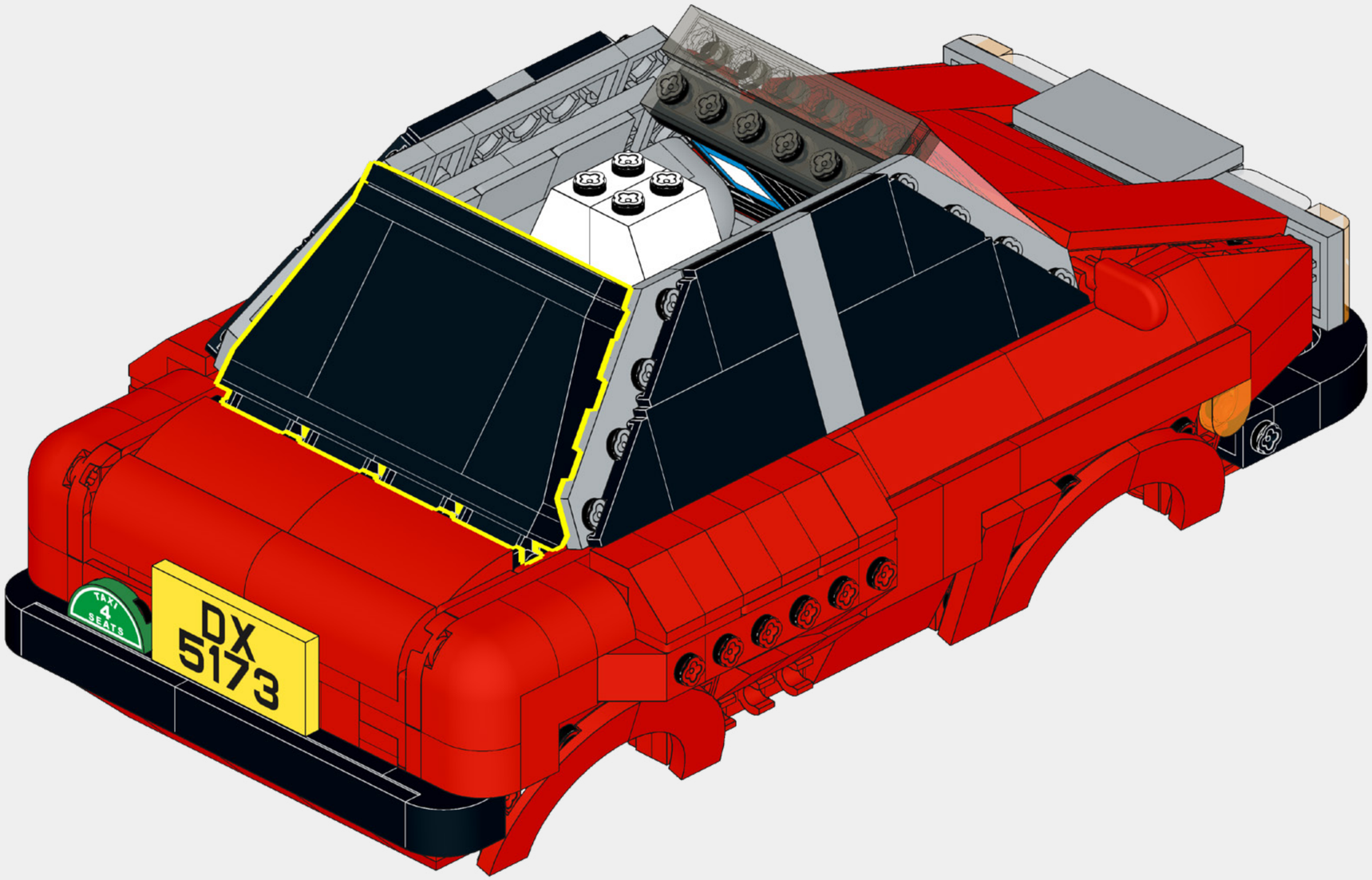

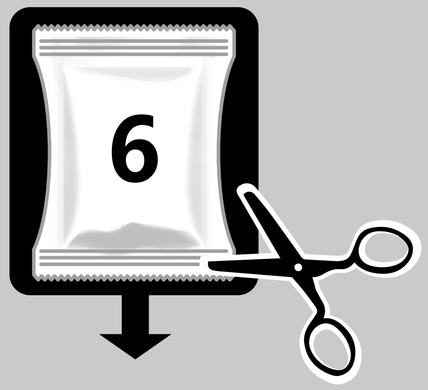
6

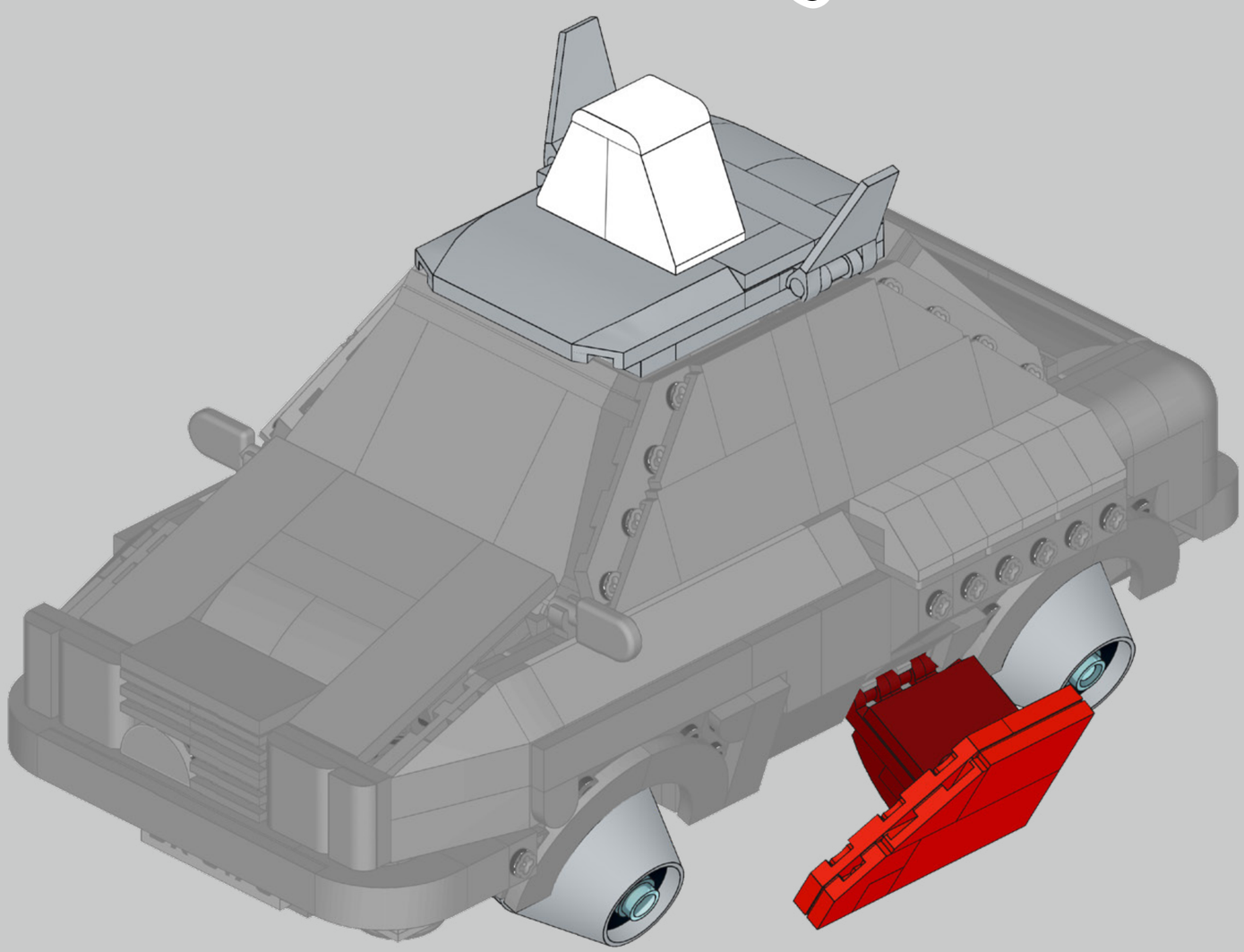

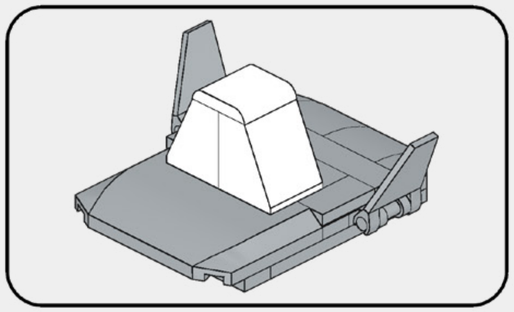

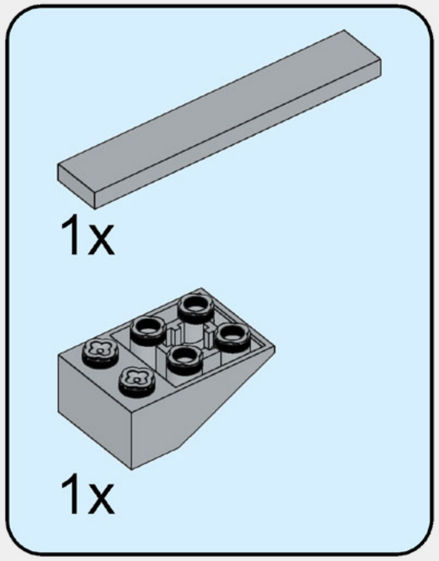

115

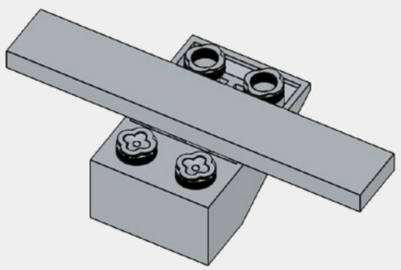

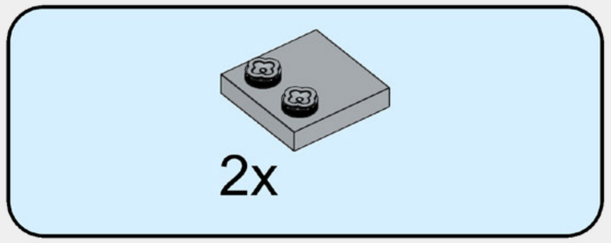

116

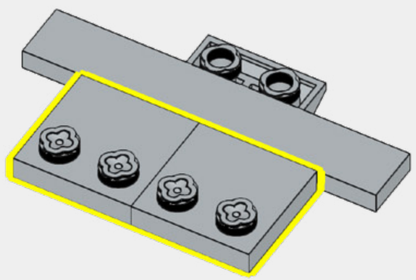

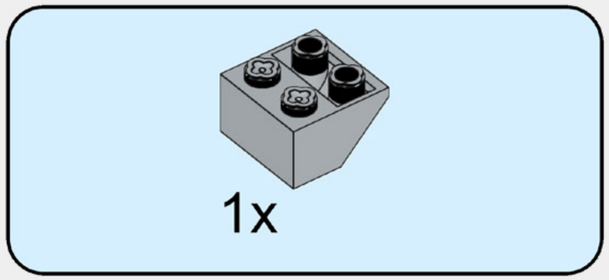

117

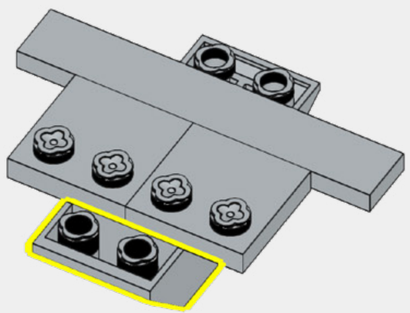

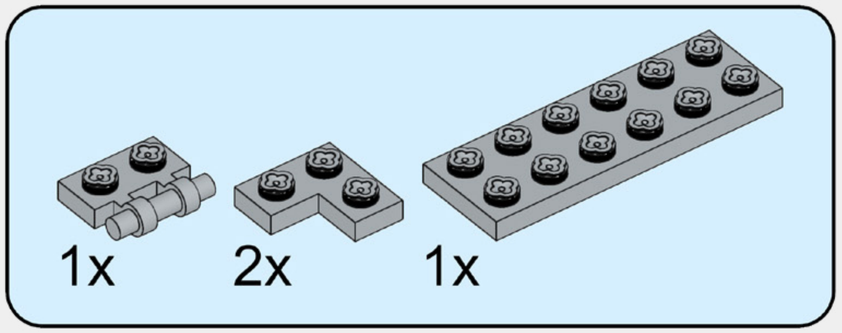

118

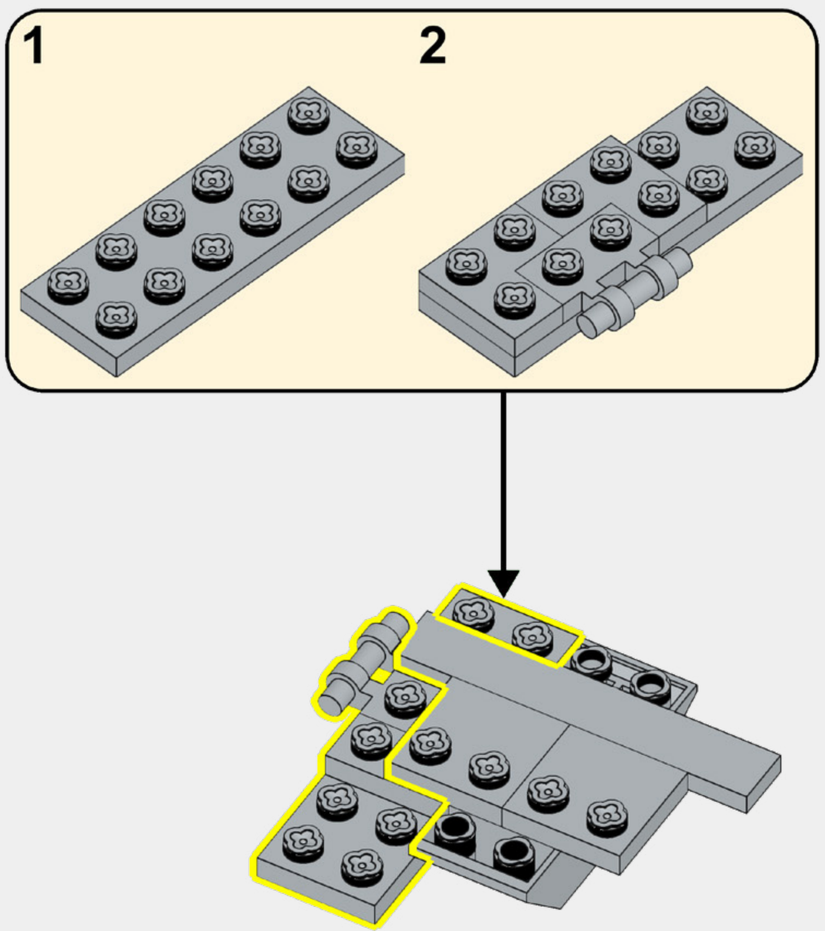

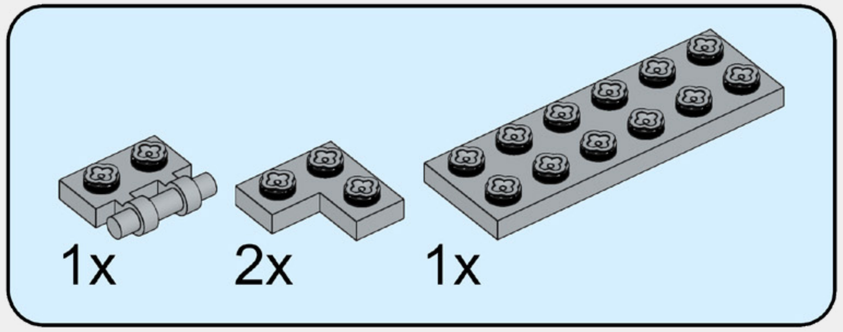

119

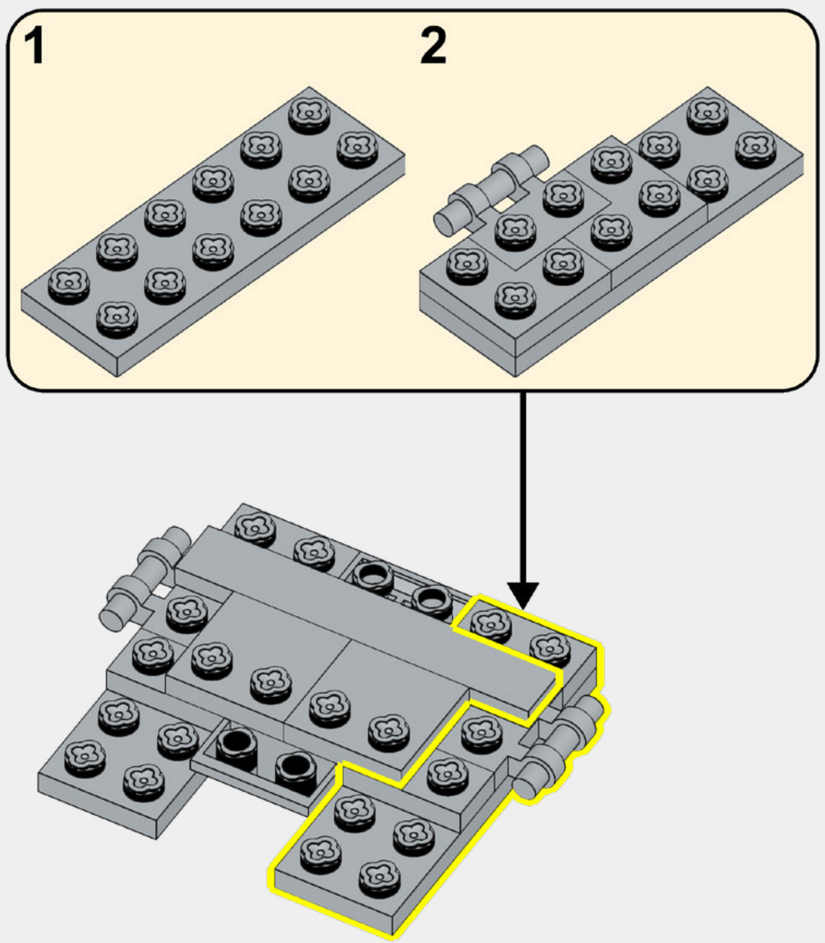

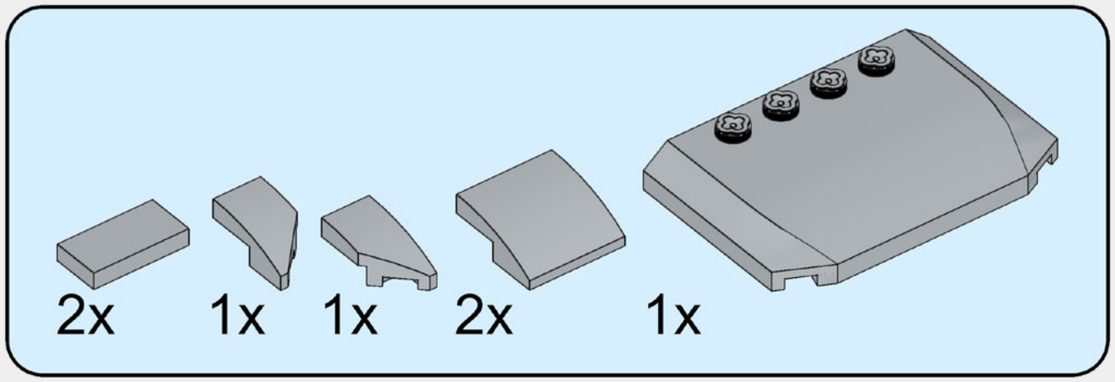

120

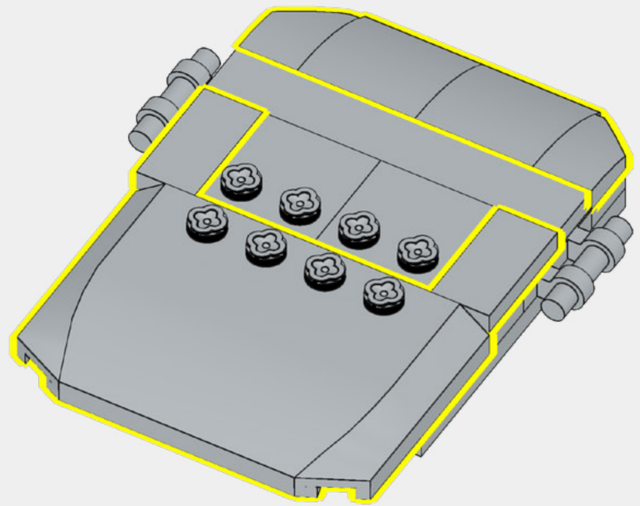

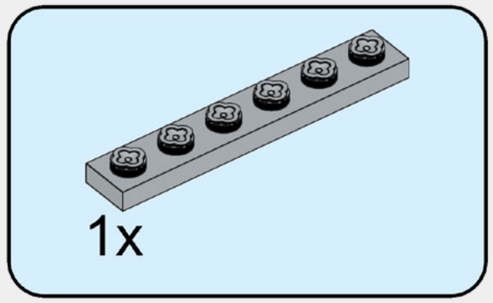

121

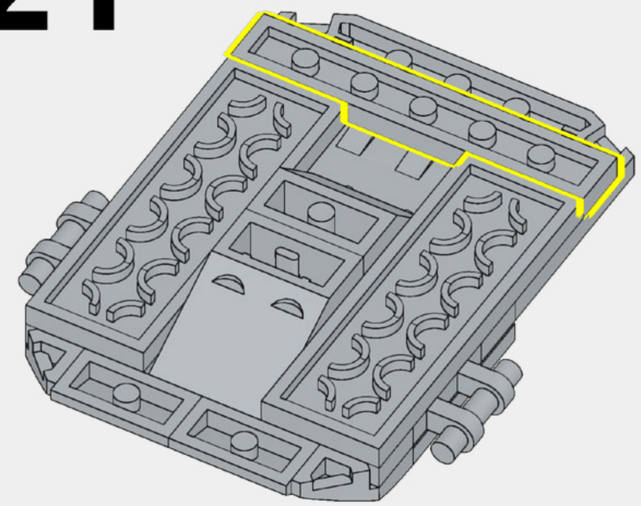

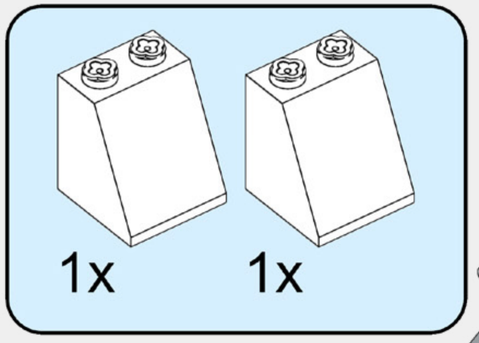

122

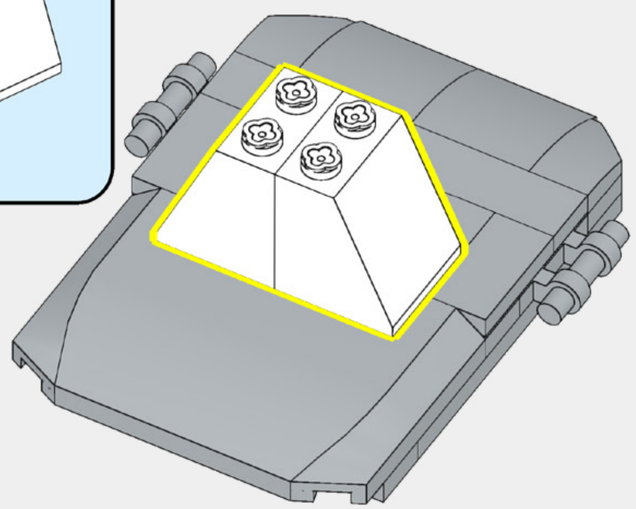

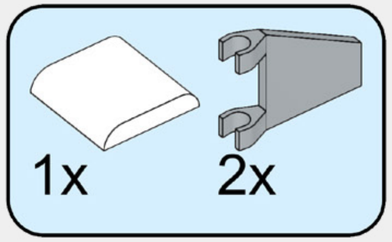

123

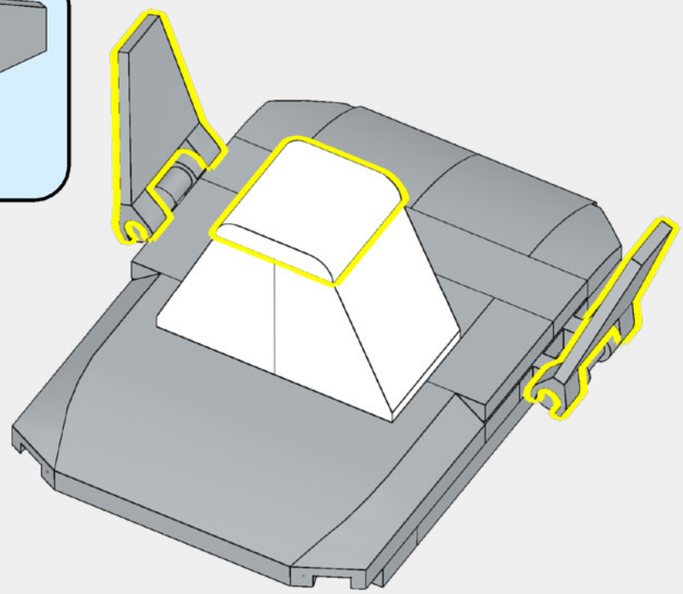

124

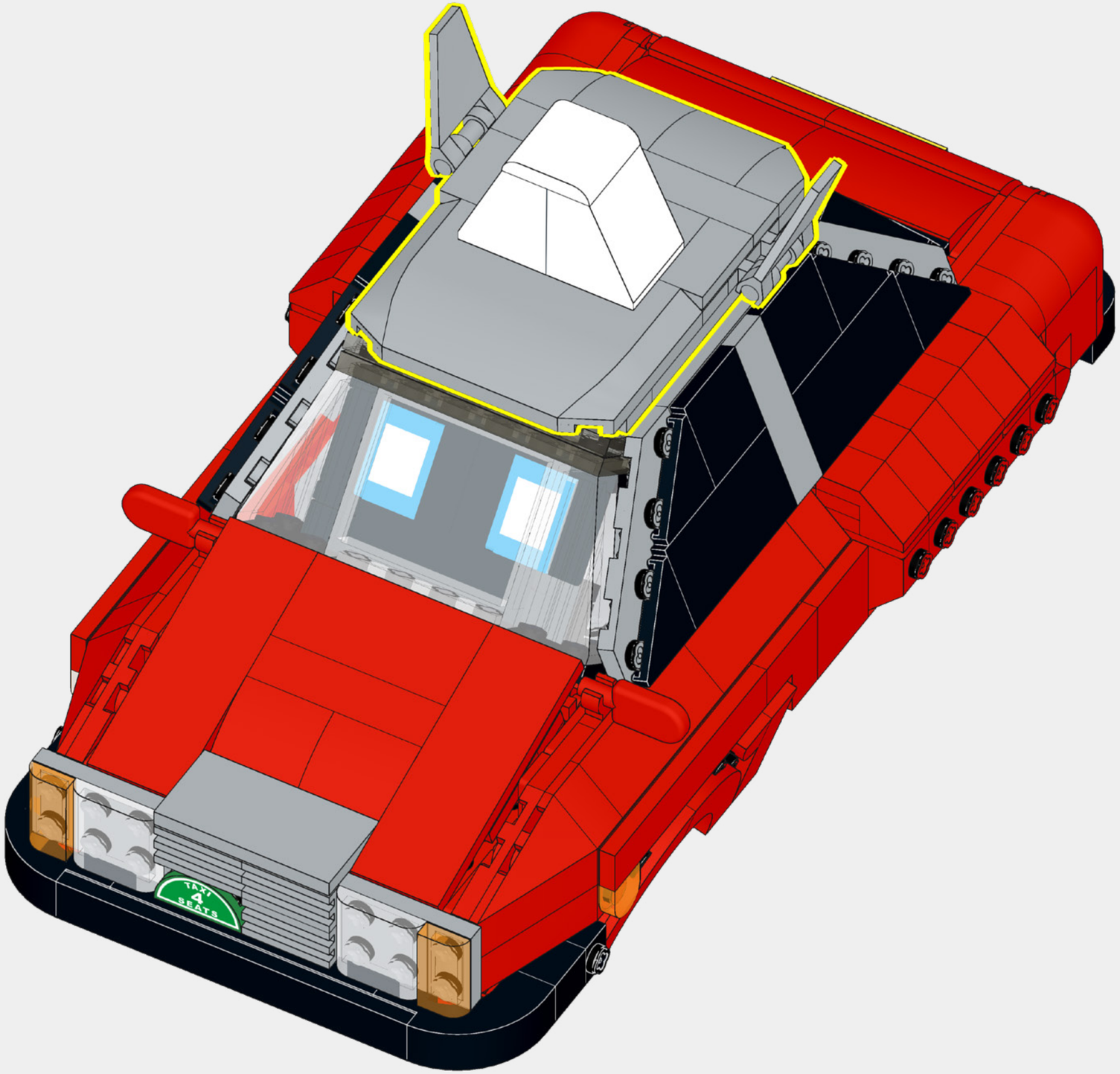

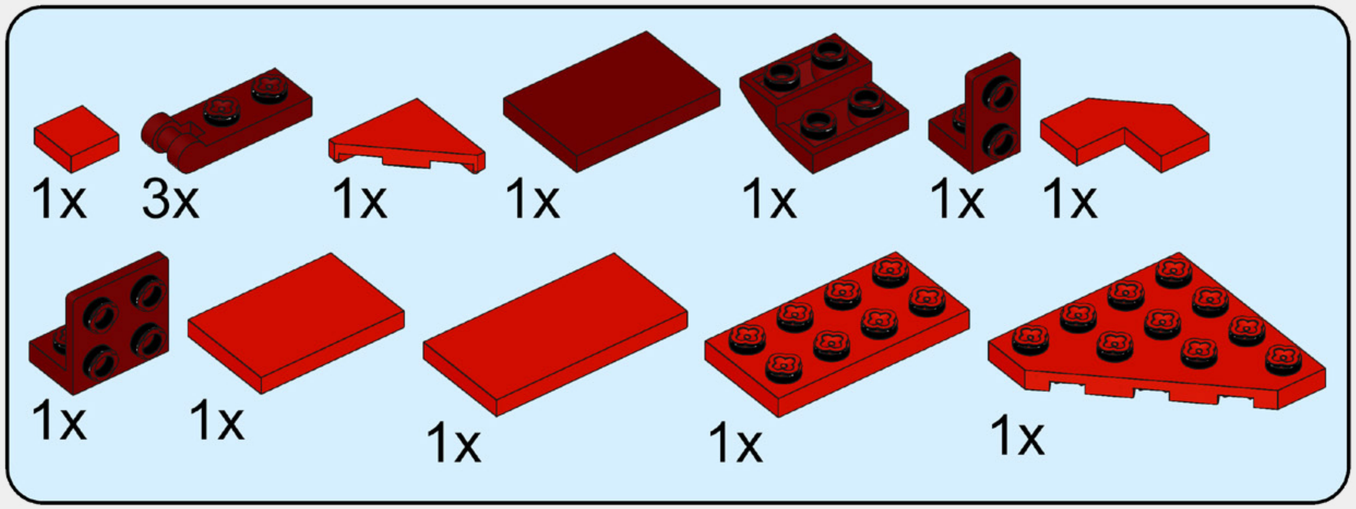

125

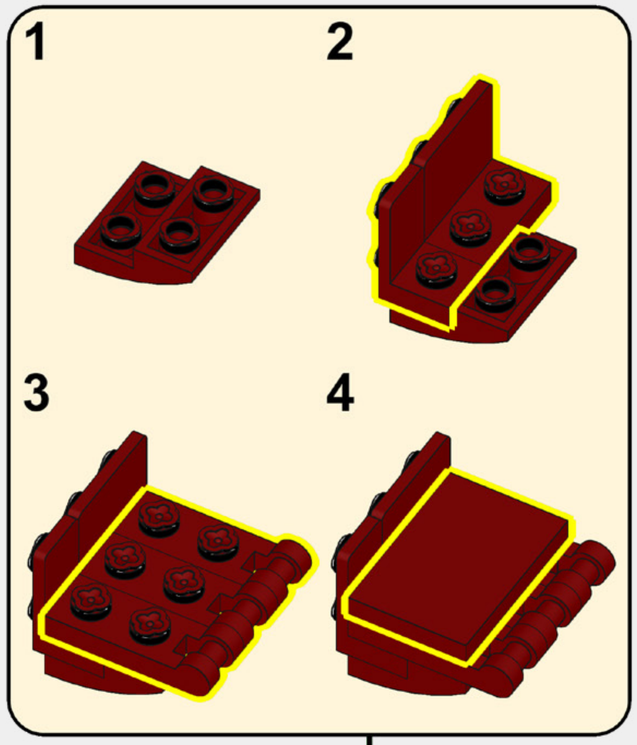

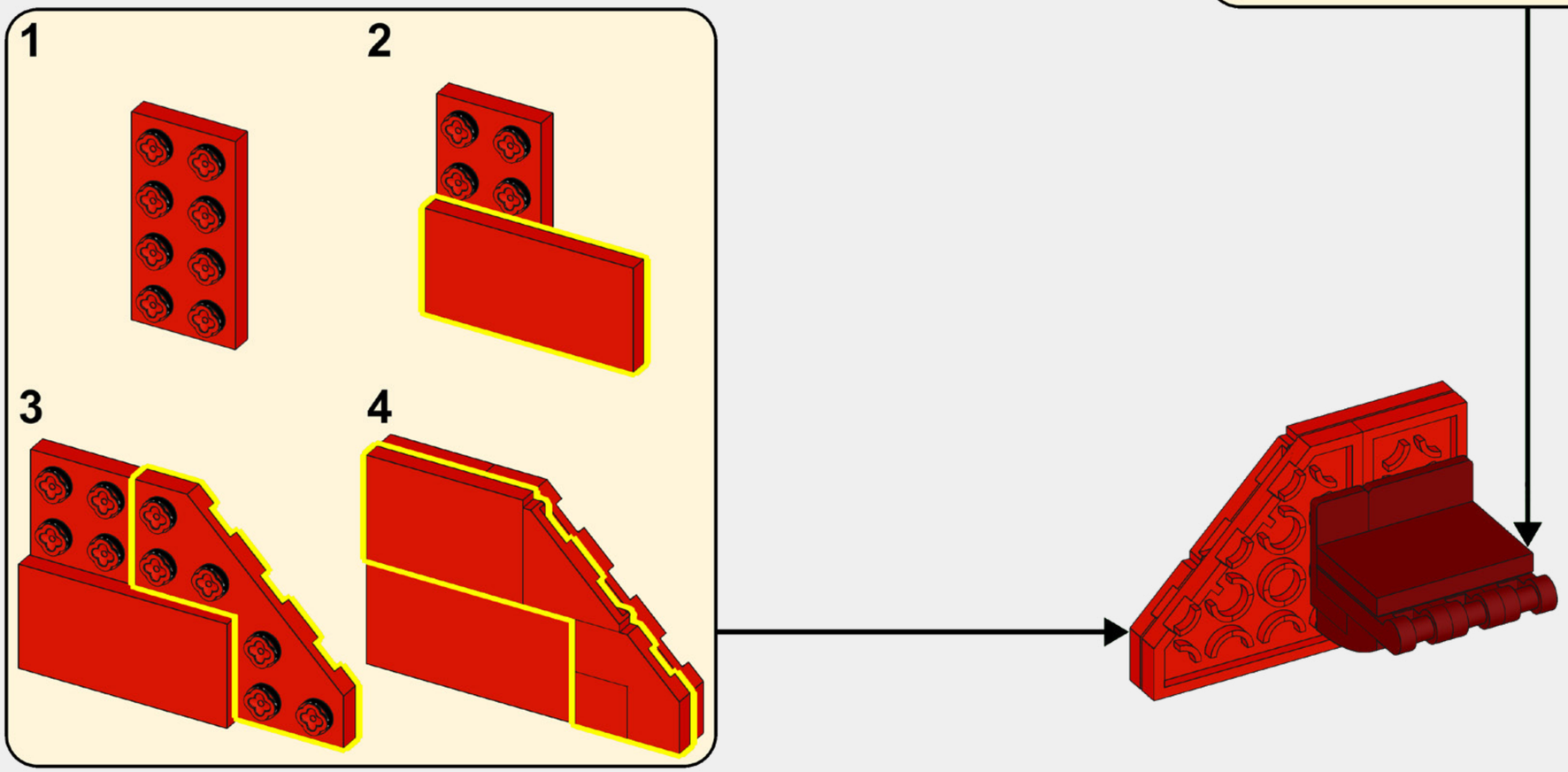

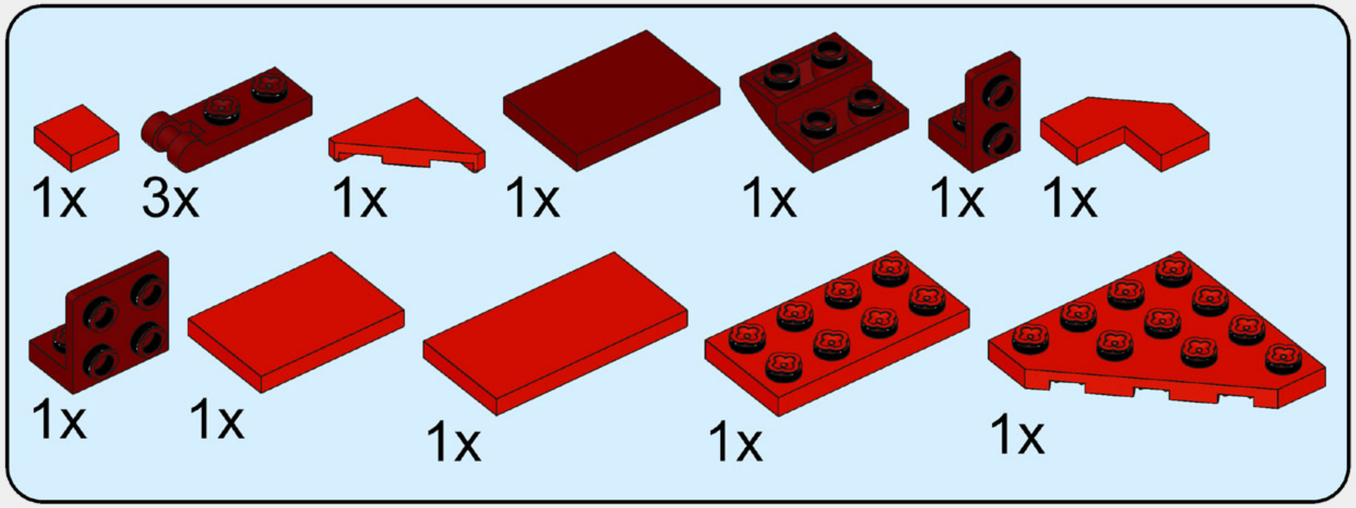

126

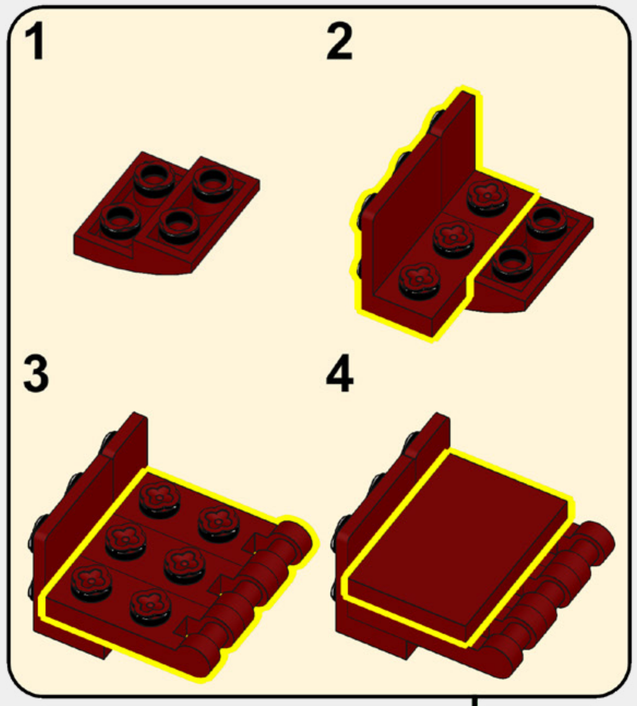

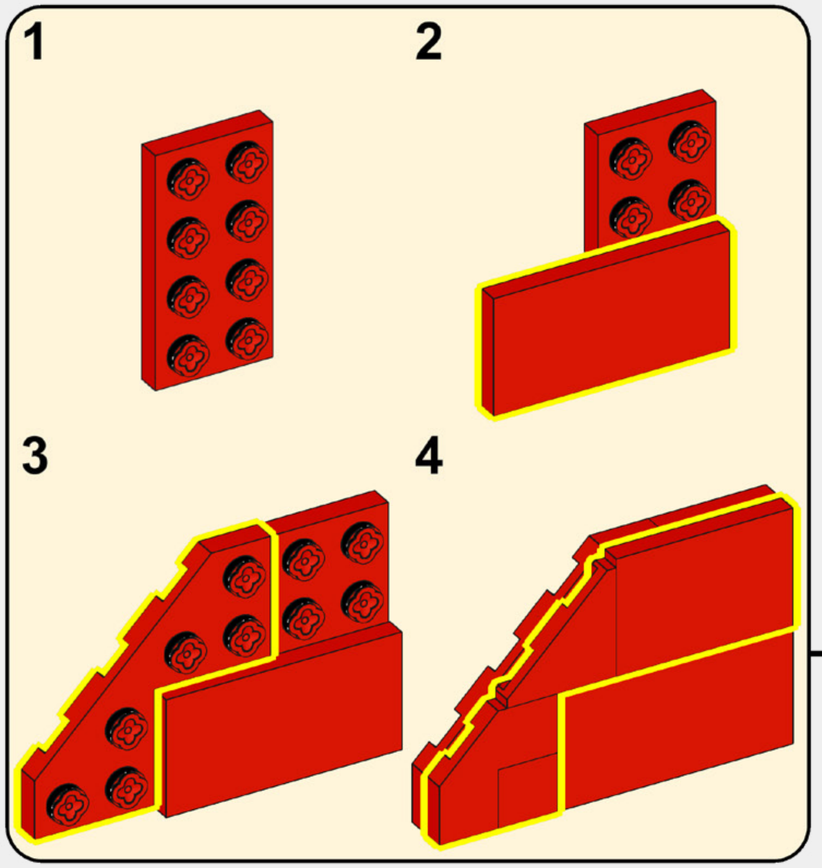

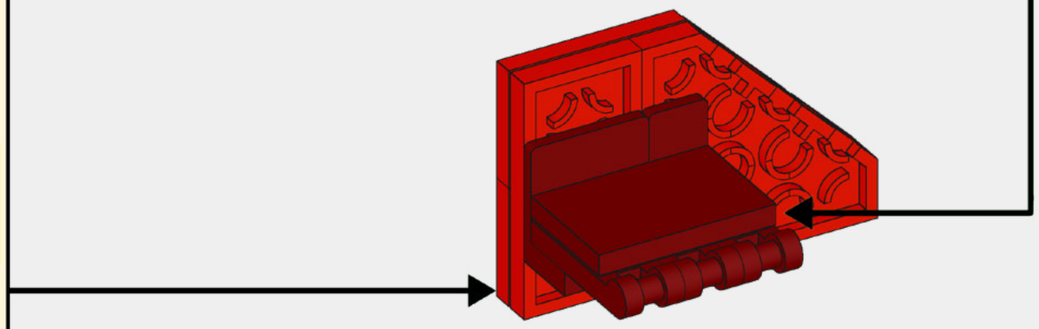

127

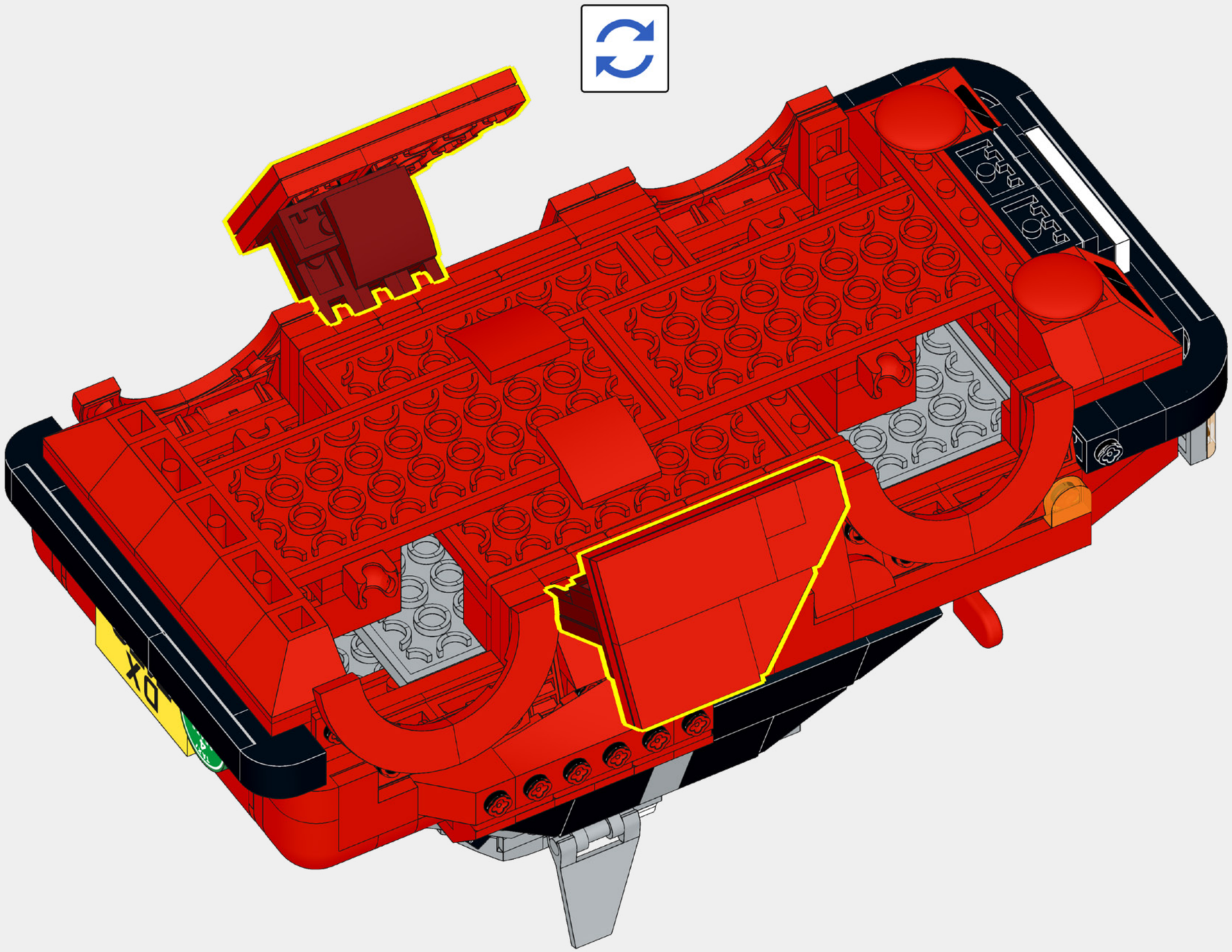

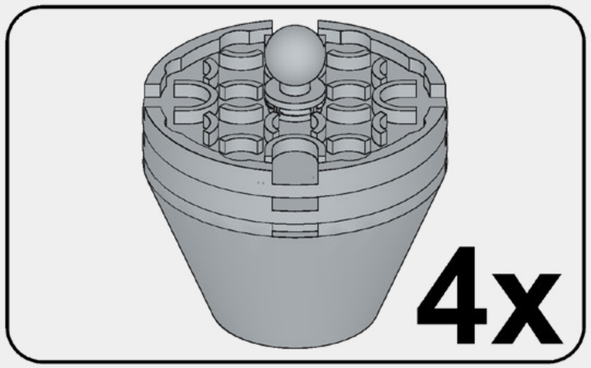

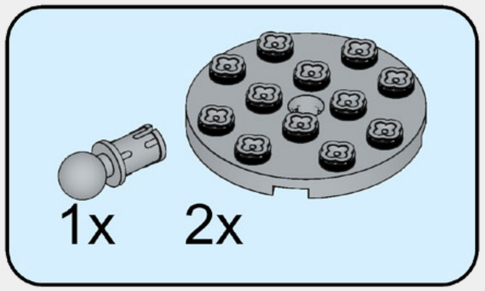

128

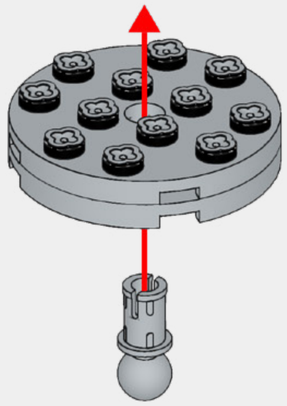

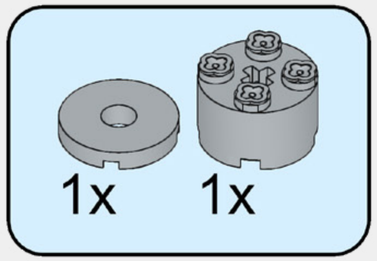

129

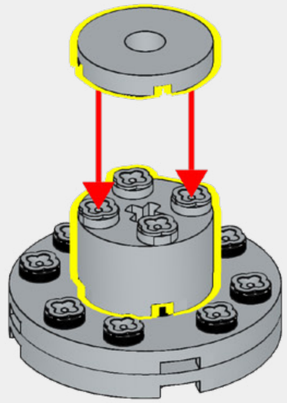

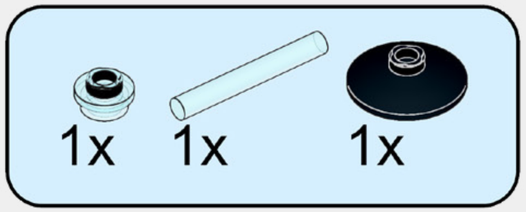

130

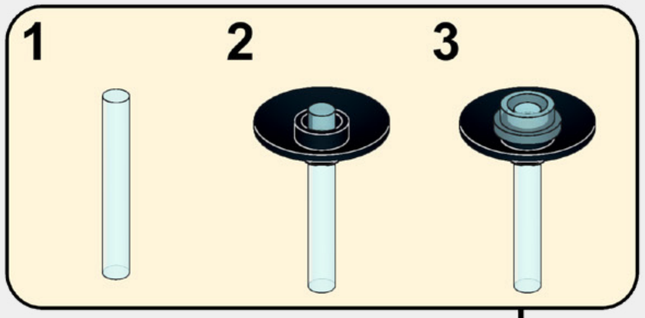

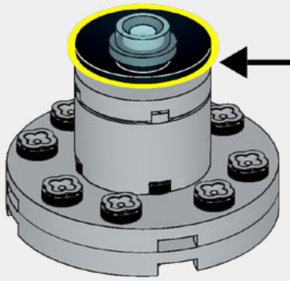

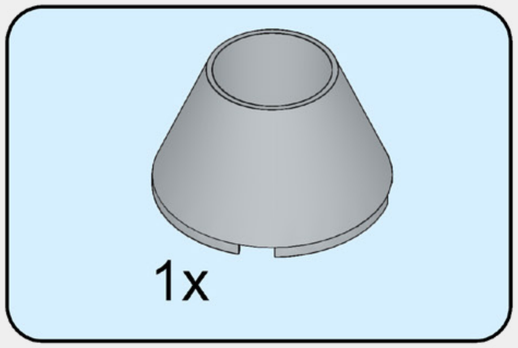

131

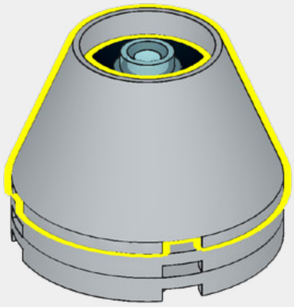

132

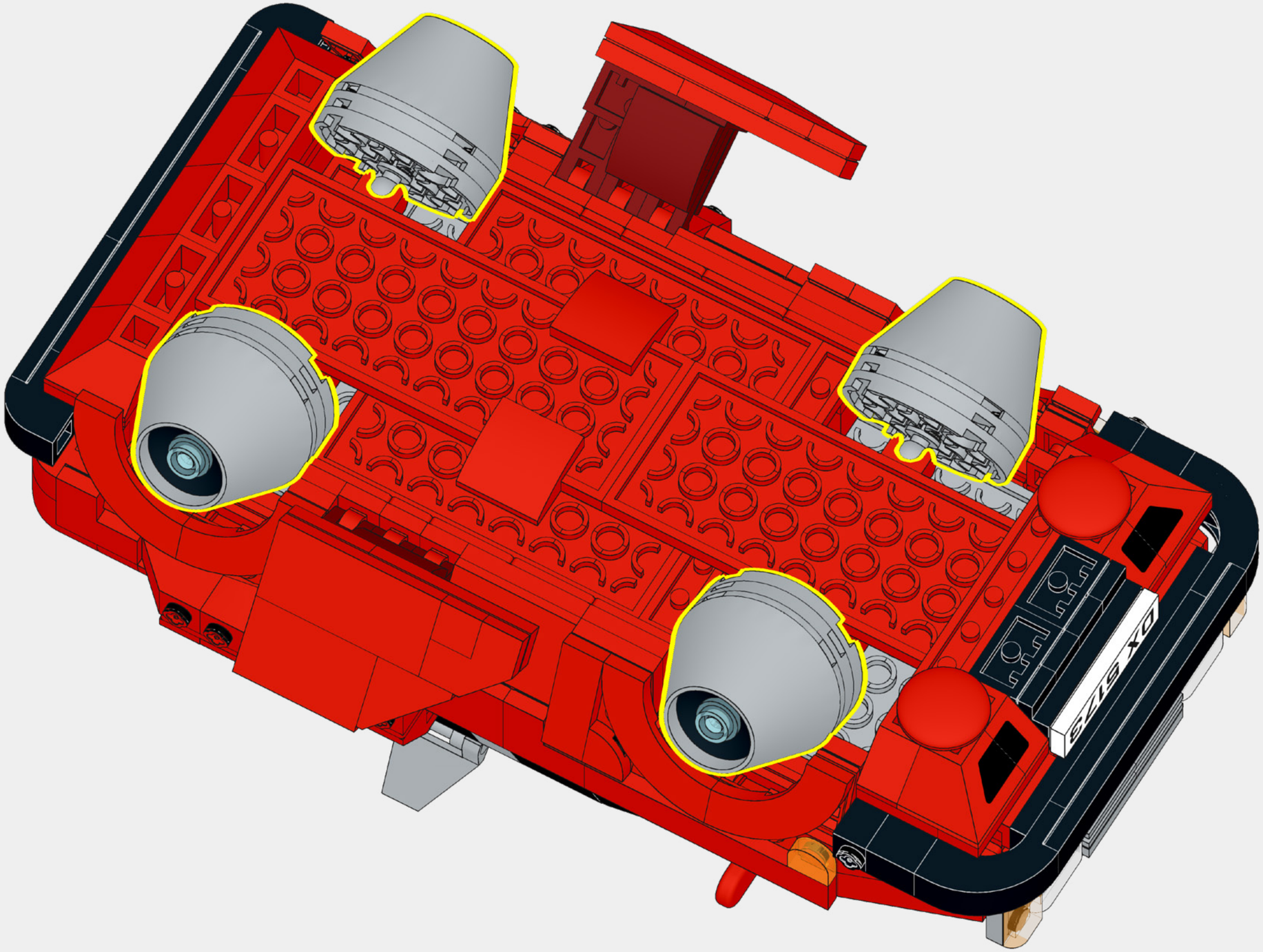

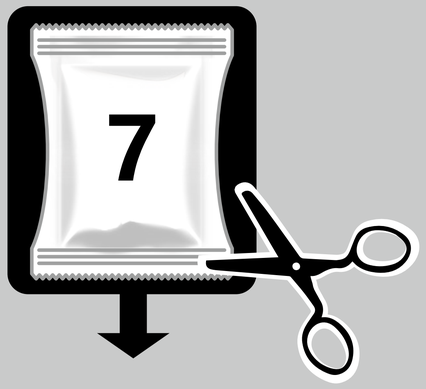
7

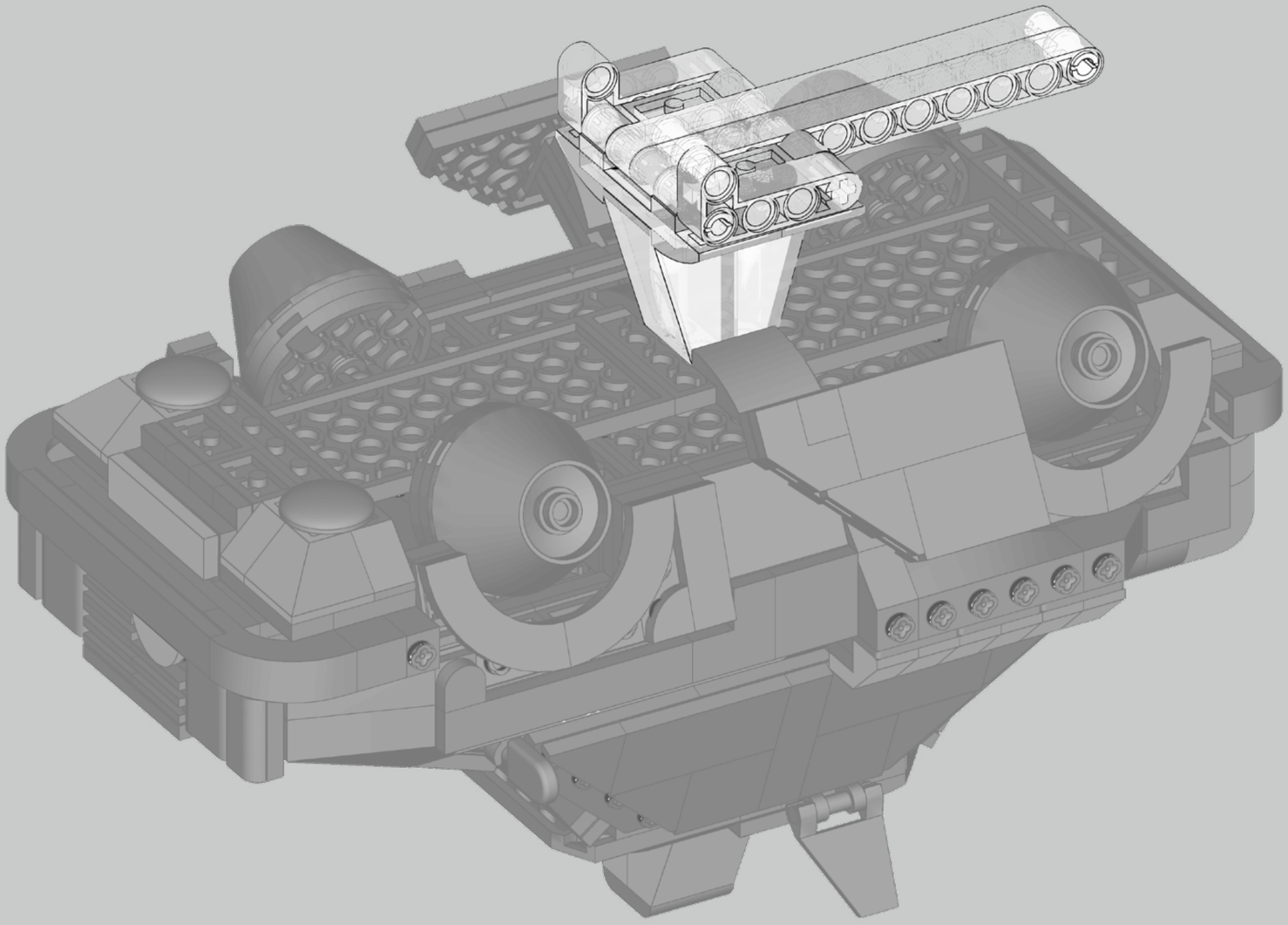

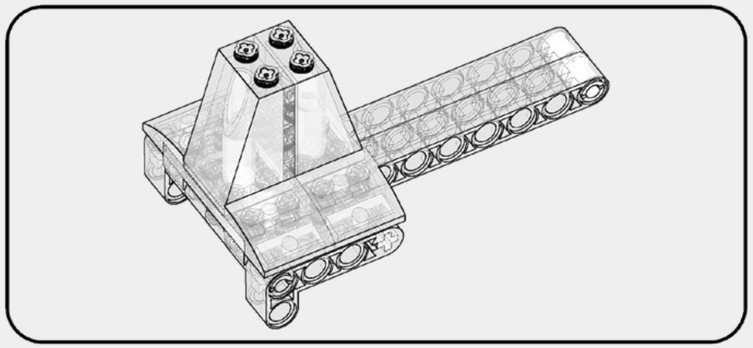

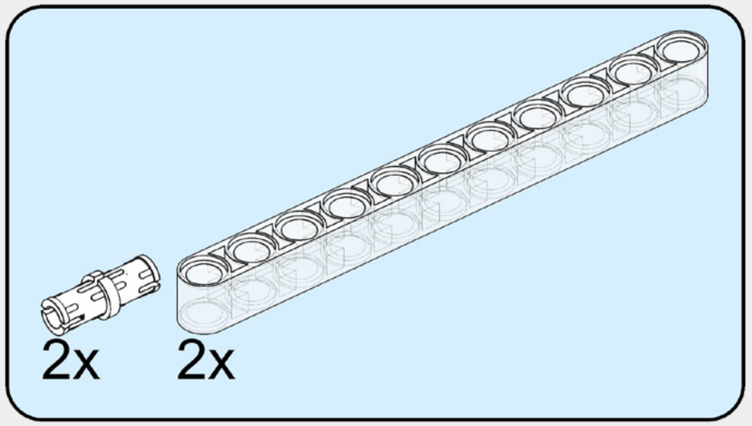

133

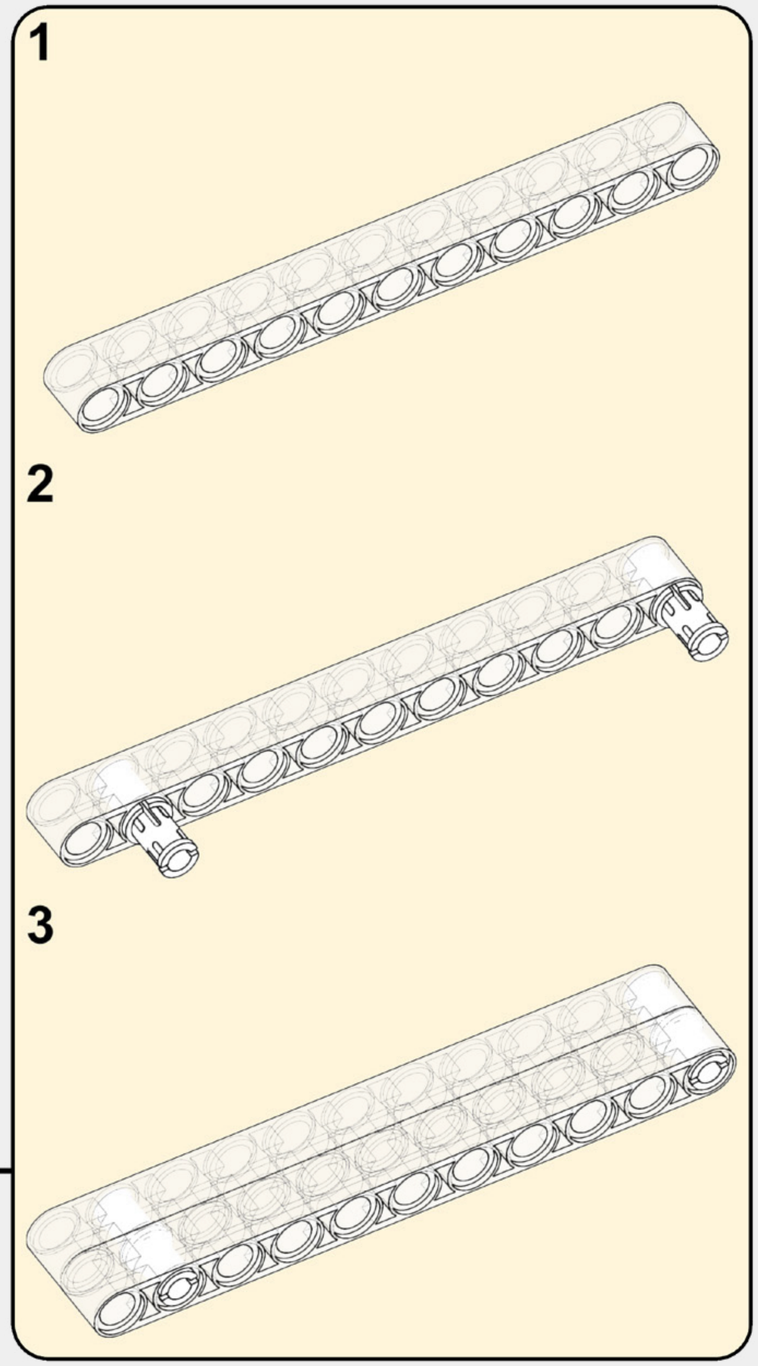

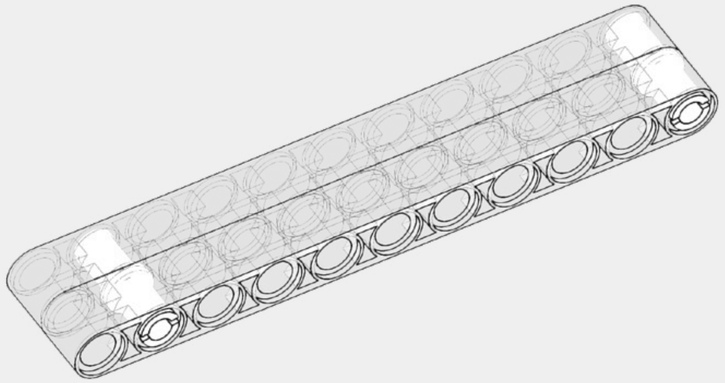

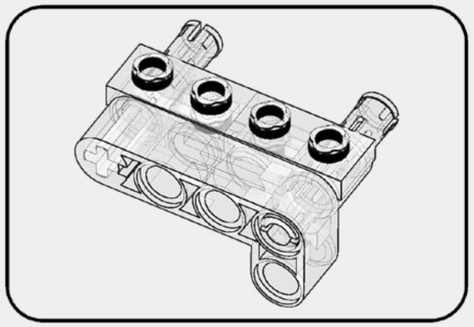

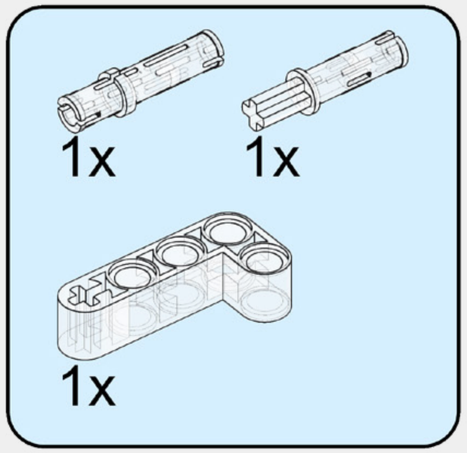

134

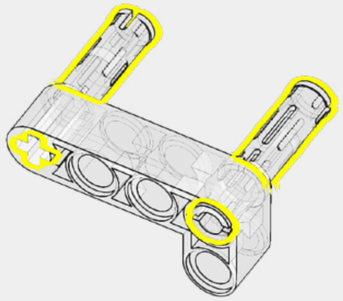

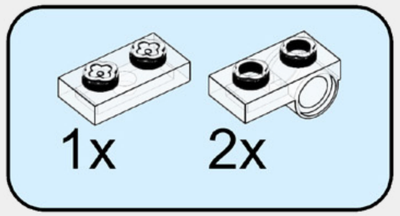

135

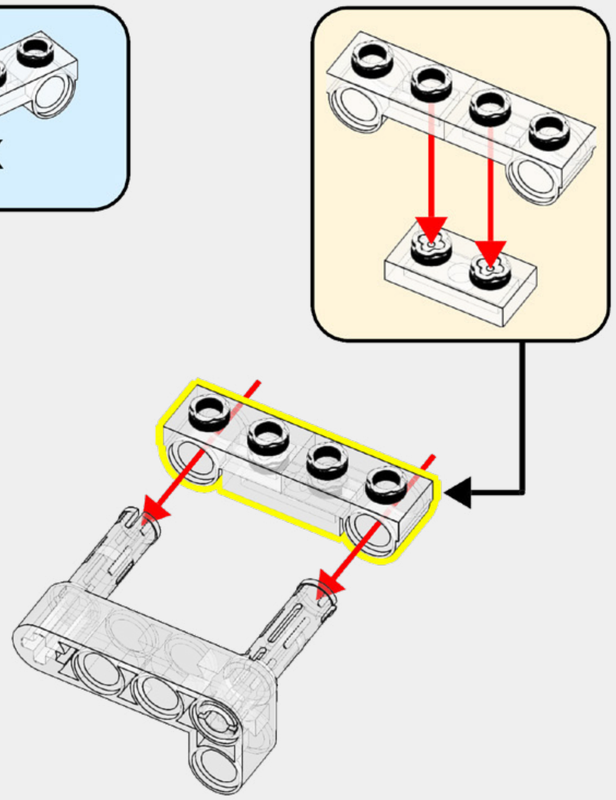

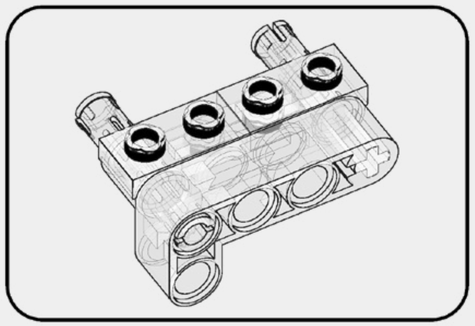

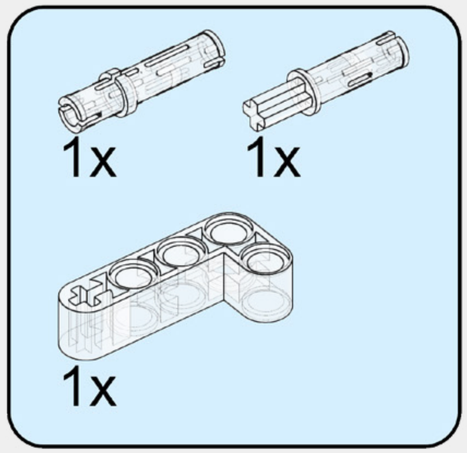

136

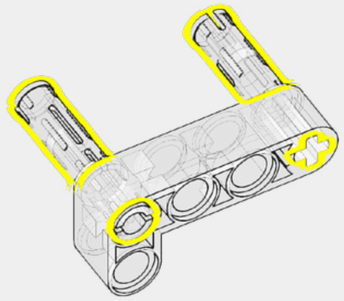

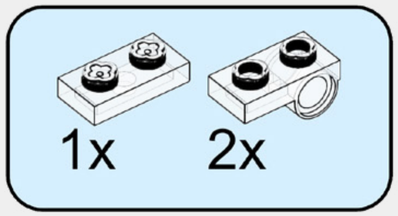

137

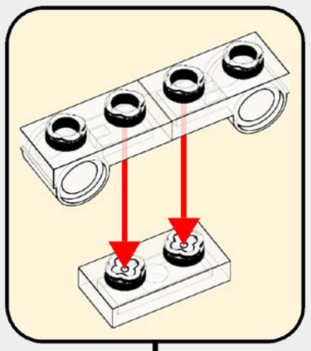

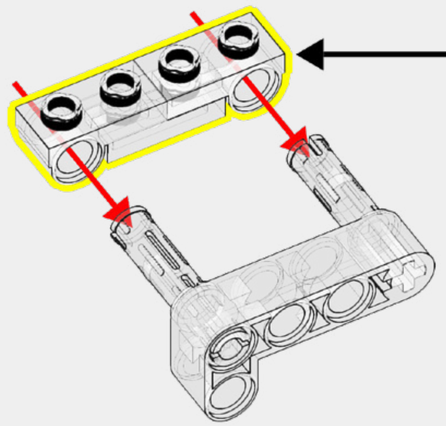

138

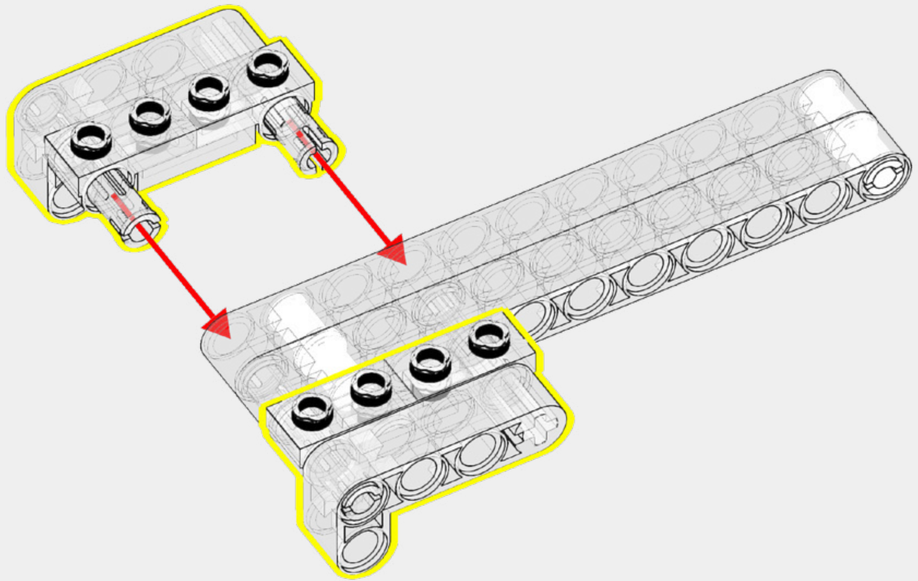

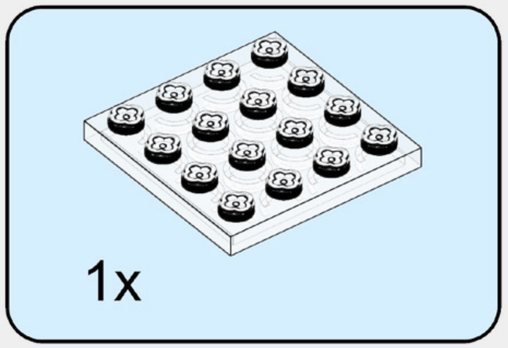

139

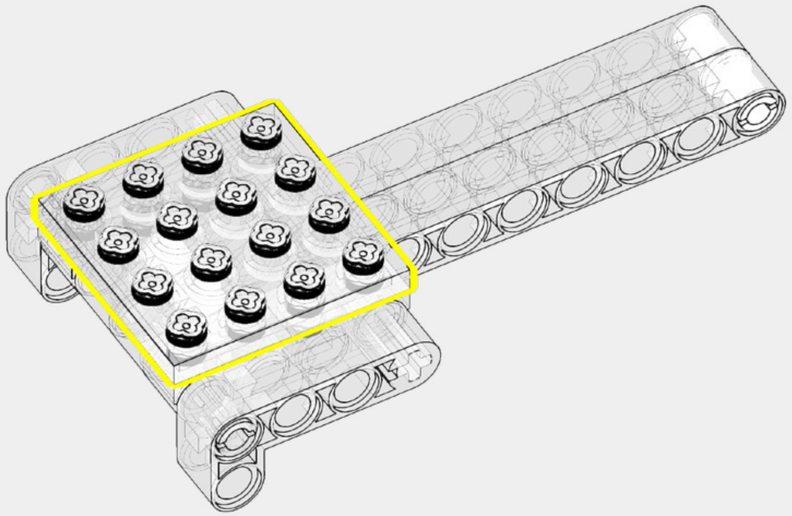

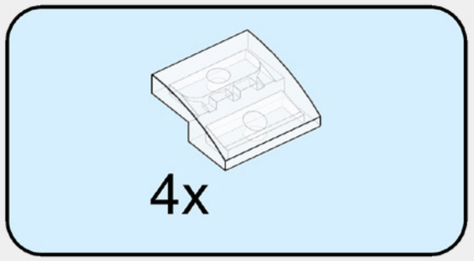

140

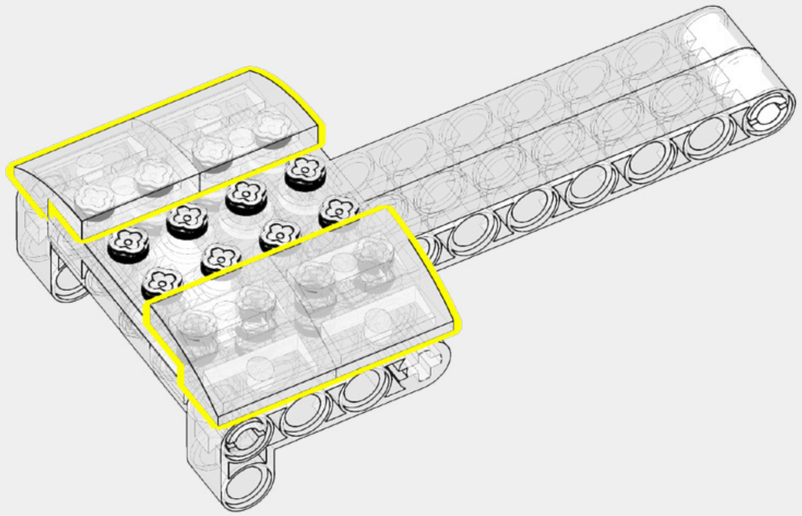

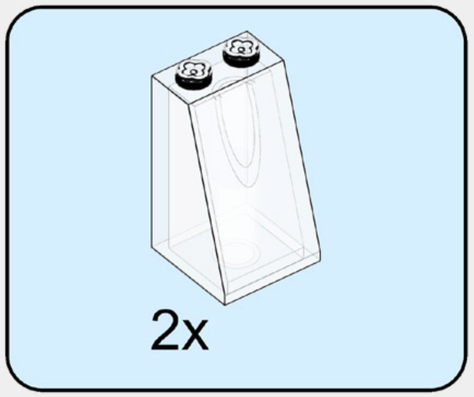

141

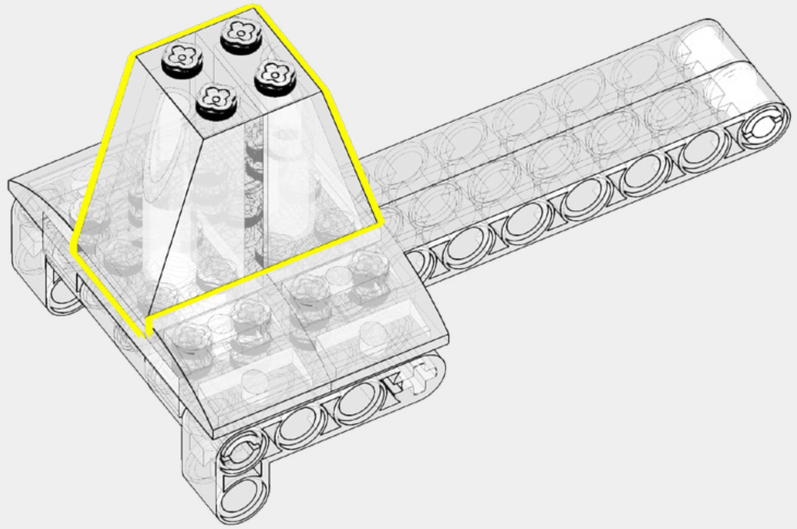

142

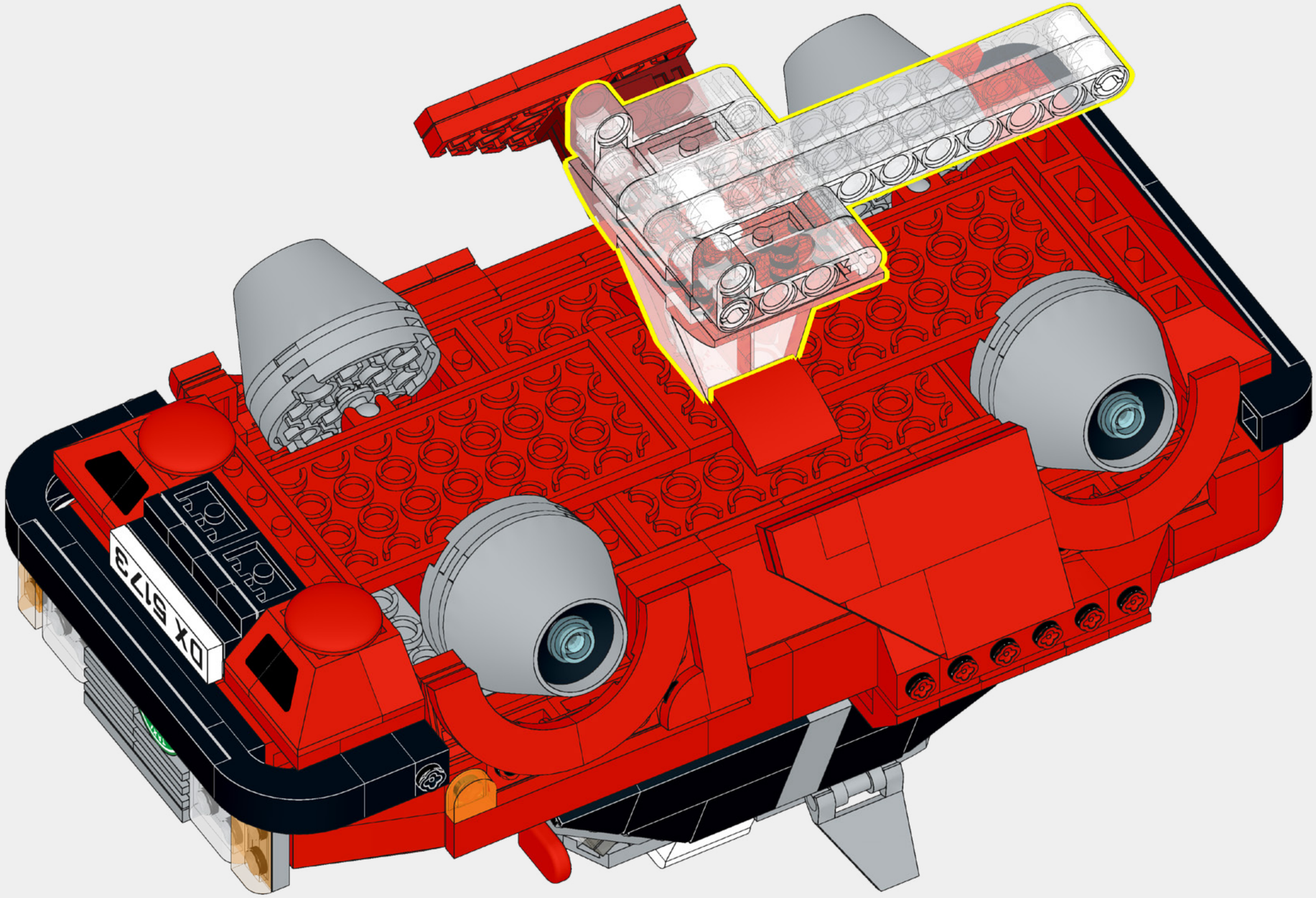

143

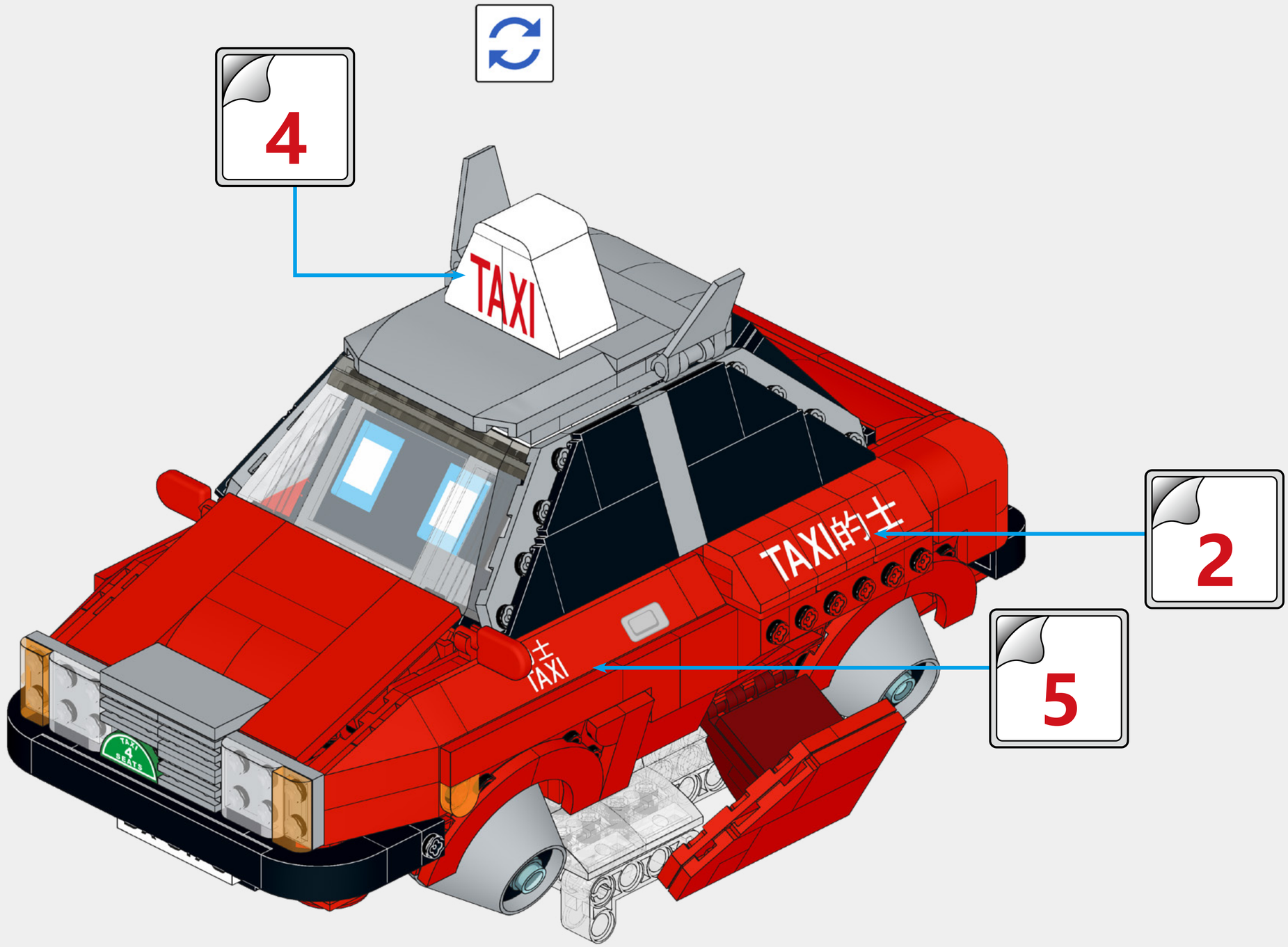

144

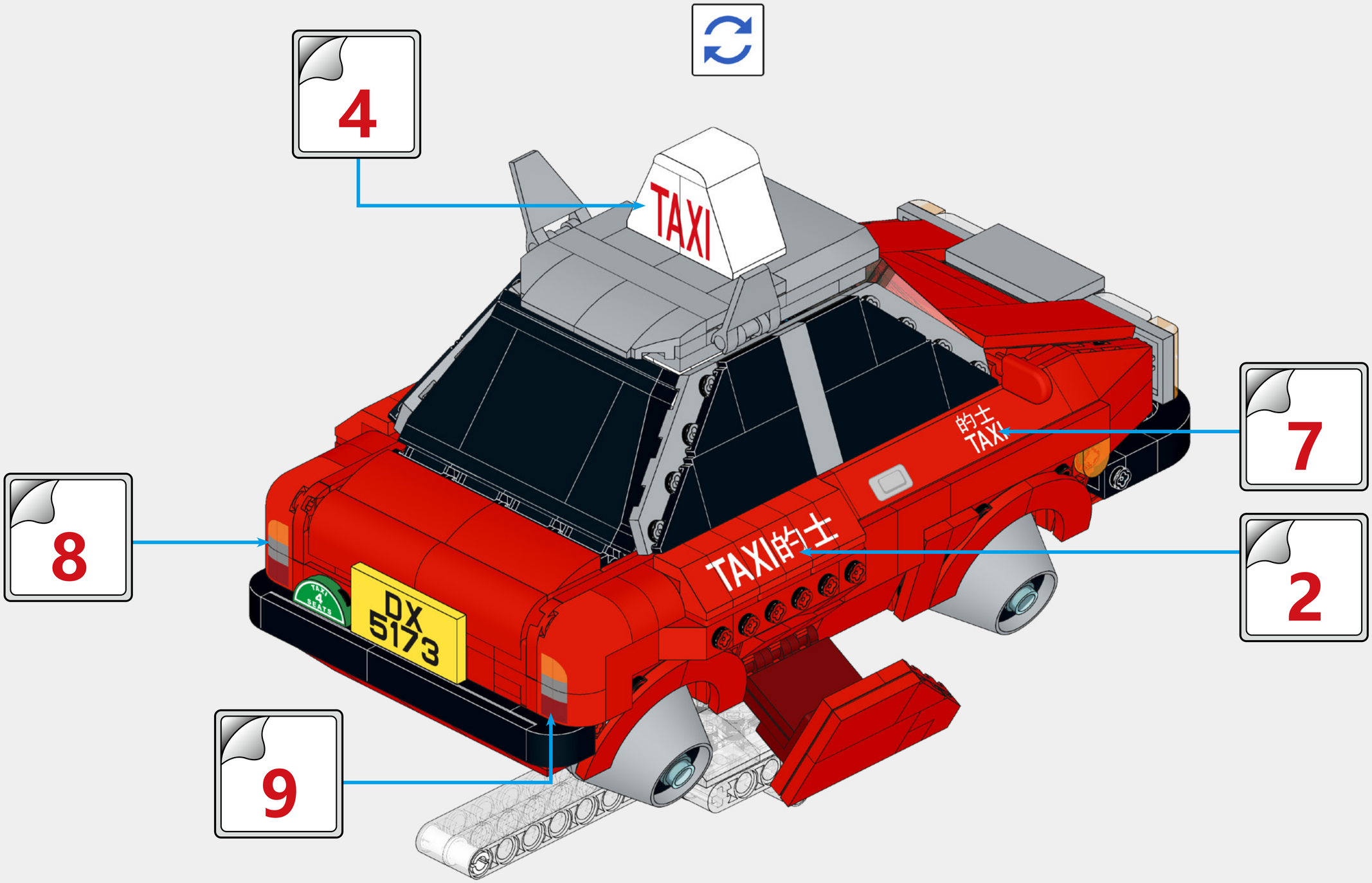

TAXI
TAXI的士
的士
TAXI
TAXI
4
SEATS

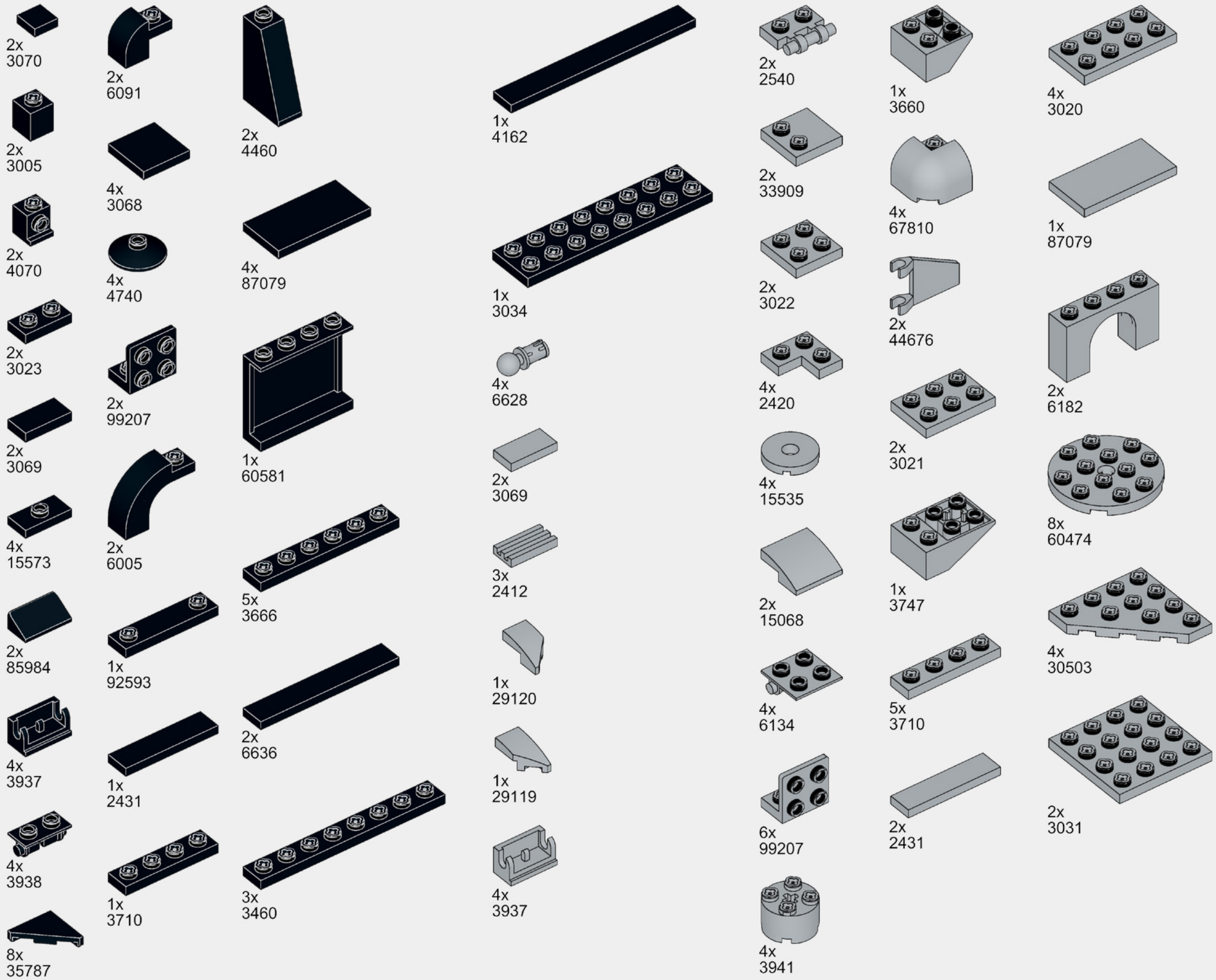
2x 3070
2x 3005
2x 4070
2x 3023
2x 3069
4x 15573
2x 85984
4x 3937
4x 3938
8x 35787
2x 6091
4x 3068
4x 4740
2x 99207
2x 6005
1x 92593
1x 2431
1x 3710
2x 4460
4x 87079
1x 60581
5x 3666
2x 6636
3x 3460
1x 4162
1x 3034
4x 6628
2x 3069
3x 2412
1x 29120
1x 29119
4x 3937
2x 2540
2x 33909
2x 3022
4x 2420
4x 15535
2x 15068
4x 6134
6x 99207
4x 3941
1x 3660
4x 67810
2x 44676
2x 3021
1x 3747
5x 3710
2x 2431
4x 3020
1x 87079
2x 6182
8x 60474
4x 30503
2x 3031

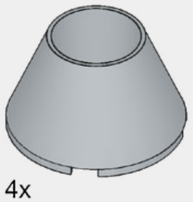
4x
4742

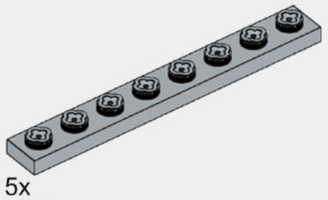
5x
3460

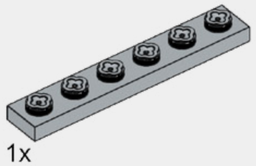
1x
3666

2x
3035

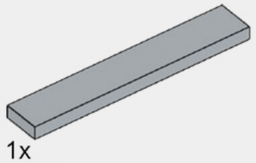
1x
6636

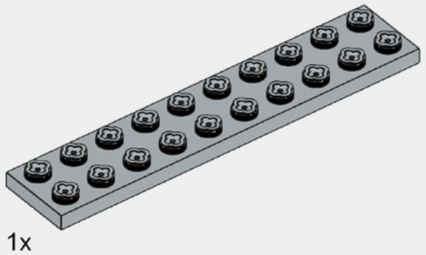
1x
3832

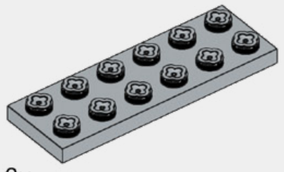
3x
3795

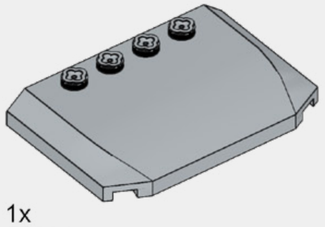
1x
52031

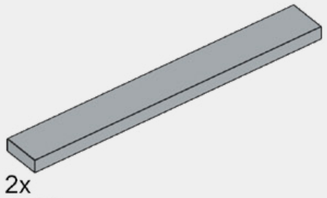
2x
4162

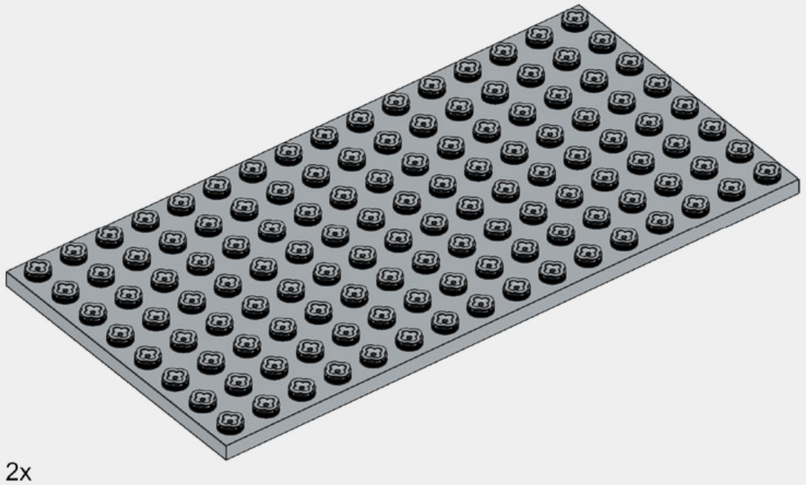
2x
92438

2x
3005

2x
2780

1x
MR42A

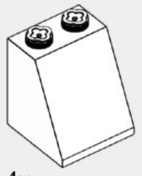
4x
3678

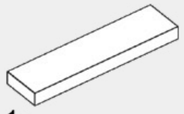
1x
2431

2x
73825

2x
32803

6x
60478

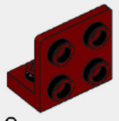
2x
99207

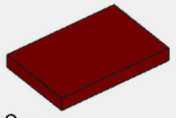
2x
26603

2x
3070

2x
25269

15x
3024

1x
3005

4x
36840

2x
4070

2x
36841

2x
4085

12x
3023

1x
mr25a

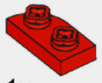
1x
mr50a

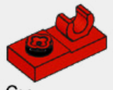
6x
44861

4x
61409

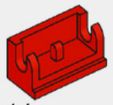
14x
3937

8x
3938

12x
28192

6x
92946

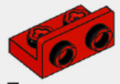
7x
99780

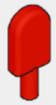
2x
30222

2x
73825

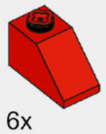
6x
3040

4x
3665

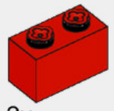
2x
3004

2x
35787

6x
6091

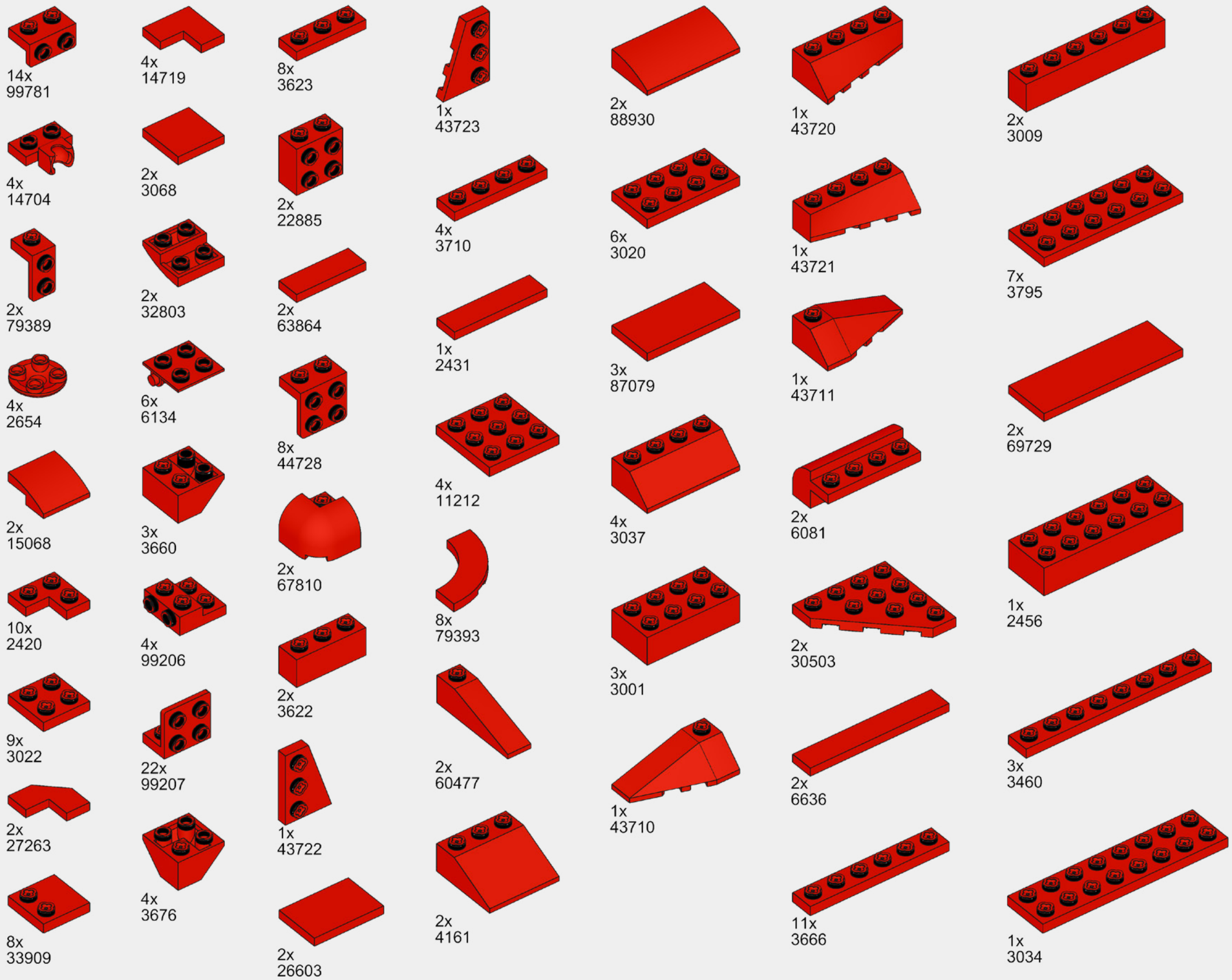
14x
99781
4x
14704
2x
79389
4x
2654
2x
15068
10x
2420
9x
3022
2x
27263
8x
33909
4x
14719
2x
3068
2x
32803
6x
6134
3x
3660
4x
99206
22x
99207
4x
3676
8x
3623
2x
22885
2x
63864
8x
44728
2x
67810
2x
3622
1x
43722
2x
26603
1x
43723
4x
3710
1x
2431
4x
11212
8x
79393
2x
60477
2x
4161
2x
88930
6x
3020
3x
87079
4x
3037
3x
3001
1x
43710
1x
43720
1x
43721
1x
43711
2x
6081
2x
30503
2x
6636
11x
3666
2x
3009
7x
3795
2x
69729
1x
2456
3x
3460
1x
3034

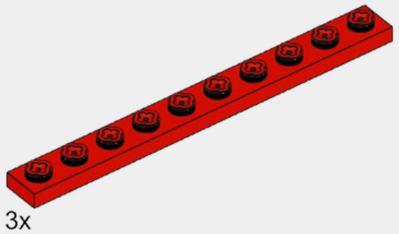
3x
4477

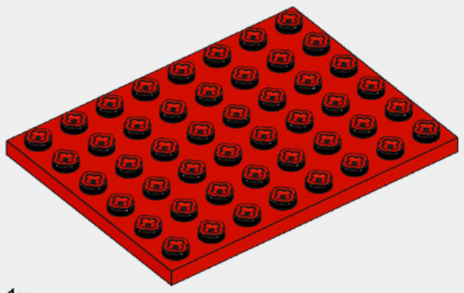
1x
3036

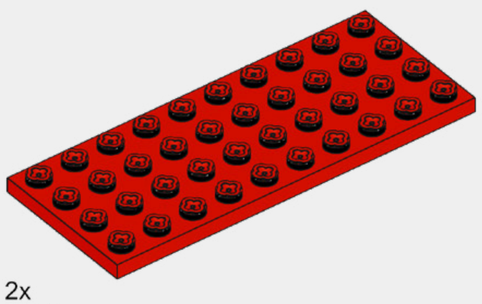
2x
3030

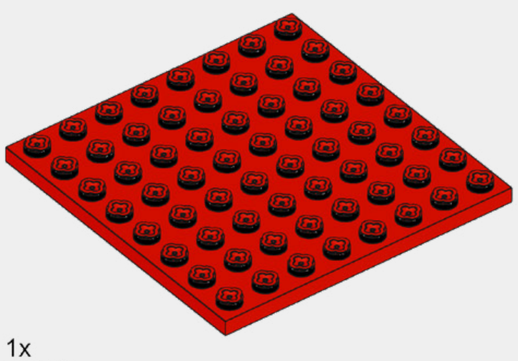
1x
41539

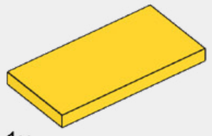
1x
87079

2x
1748

2x
73825

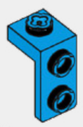
2x
79389

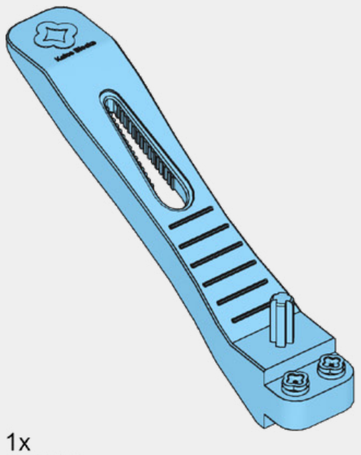
1x
MT84A

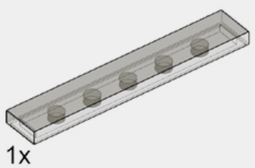
1x
6636

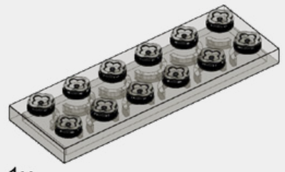
1x
3795

2x
3023

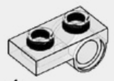
4x
18677

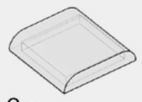
2x
MR42A

4x
15068

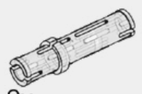
2x
6558

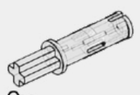
2x
11214

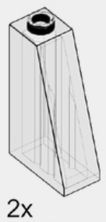
2x
4460

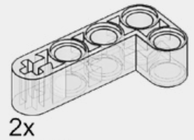
2x
32140

2x
3684

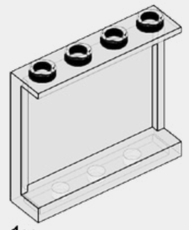
1x
60581

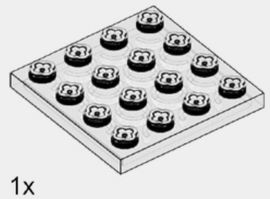
1x
3031

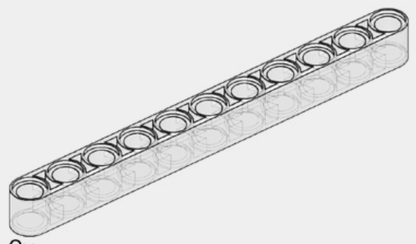
2x
32525

2x
24246

2x
MR14A

4x
85861

4x
87994

TAXI
TAXI的士
的士
TAXI
TAXI
4
SEATS
DX 5173
TAXI
TAXI的士
的士
TAXI
DX 5173
TAXI的士
的士
TAXI
TAXI
4
SEATS
DX
5173

香港重機
HONGKONG MACHINES

Collect all the Hong Kong Machines models

紅的重機

KB38001

01 MECHA TAXI RED

叮叮重機

KB38002

02 MECHA TRAM

巴士重機

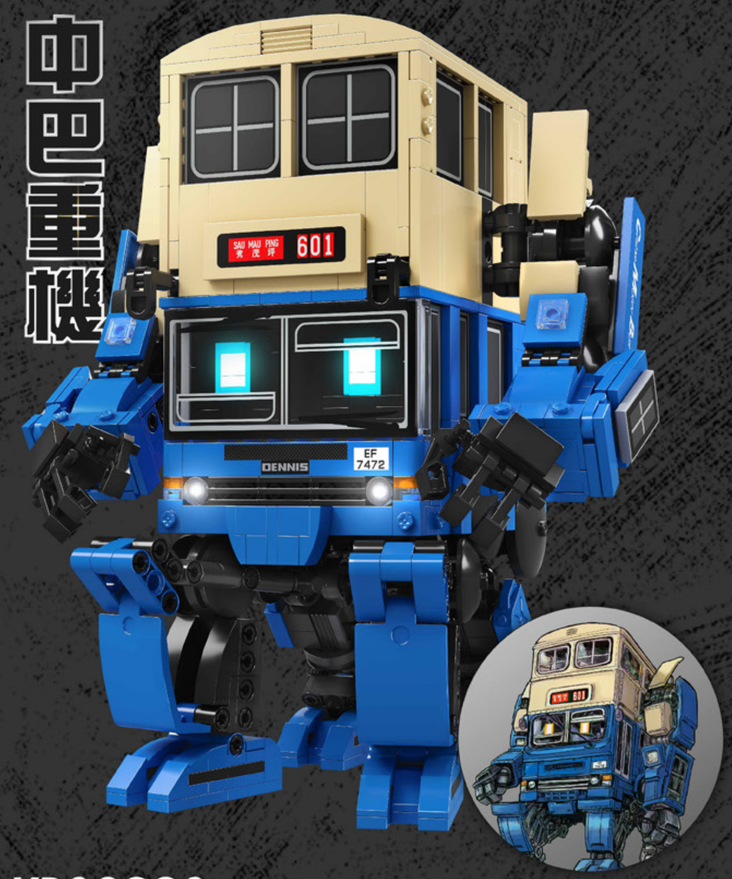

KB38003

03 MECHA CMB

MECHA TAXI

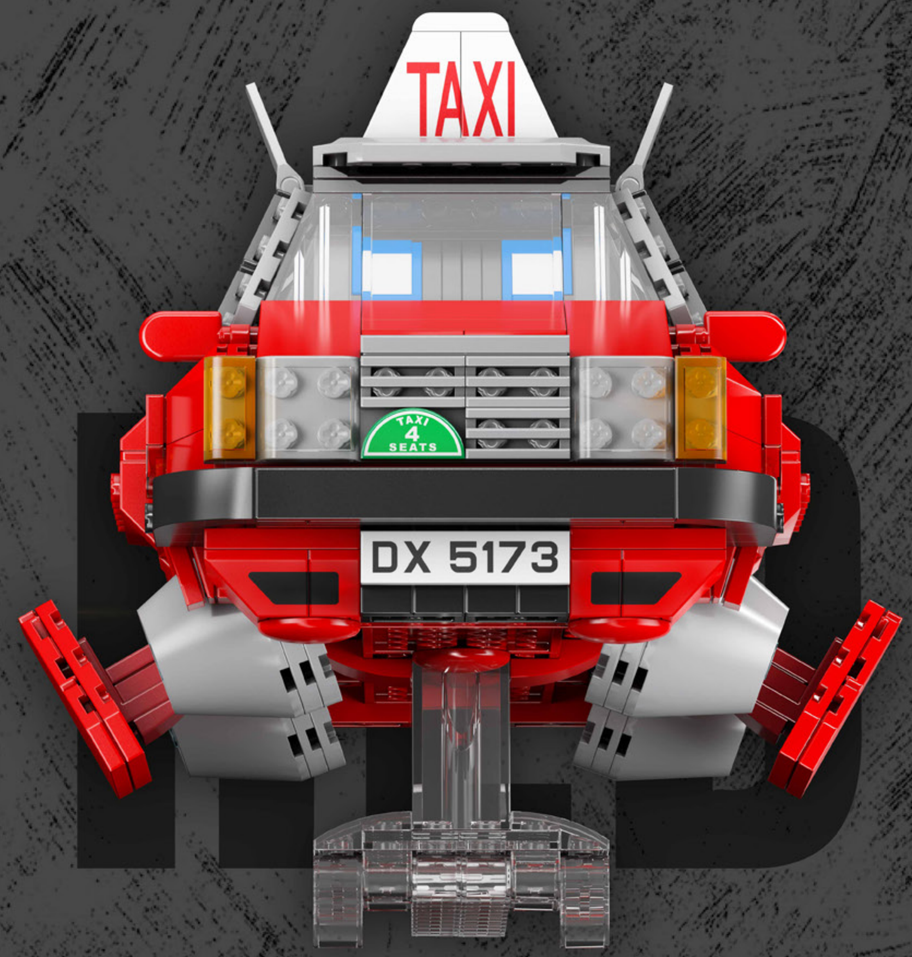

香港重機
HONGKONG MACHINES

佳樂專 Kalos Blocks

花型藝術積木 FLORAL-ART BLOCKS

KalosBlocks

www.kalos-blocks.com

微影 TINY

TINY.com.hk

tinyhk

hktiny

Tiny HK Official

教學影片